DESCRIPTION	MATERIAL	MAT. LOCATION
	P30 CARBON-CARBON	-

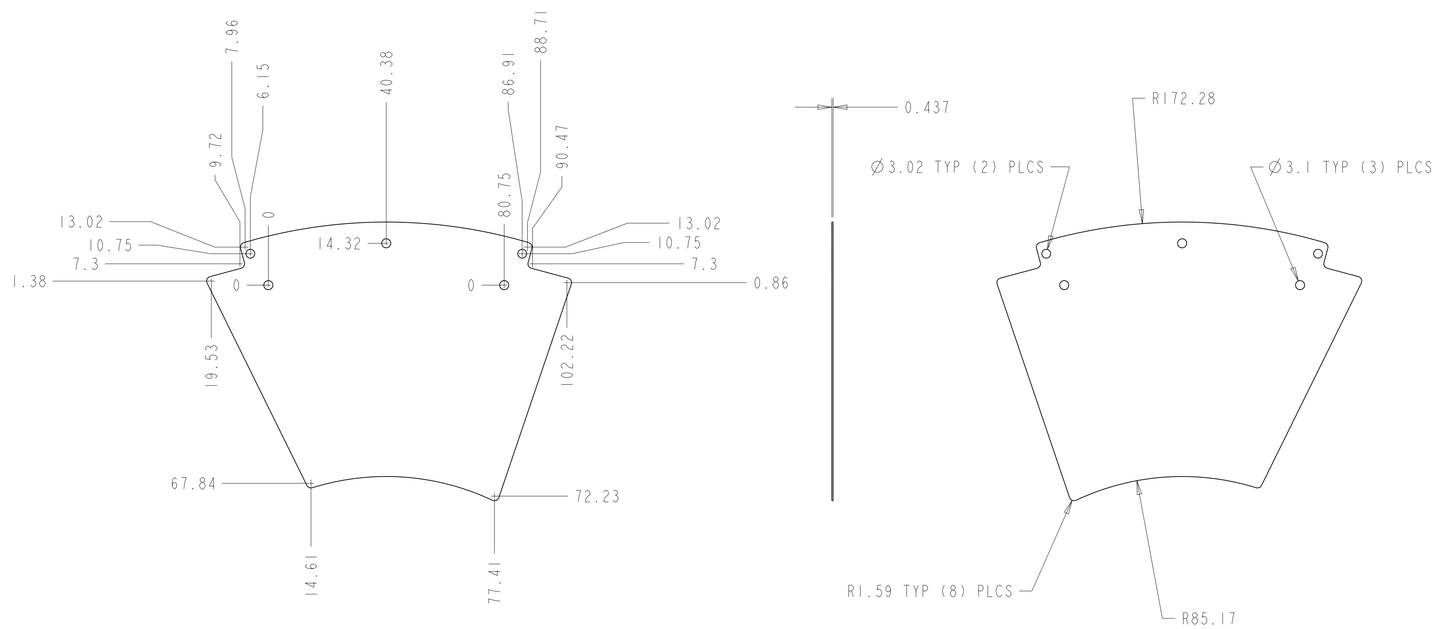

REV	DWG	CHK	ZONE	DATE	CHANGES

UNLESS OTHERWISE SPECIFIED

TOLERANCES		
	X.X ± 0.1	FRAC. ± 1/64
	X.XX ± 0.01	Angles ± 0.50°
	X.XXX ± 0.001	FINISH 125 (Typical)

DO NOT SCALE PRINT

THREADS ARE CLASS 2
CHAMFER ENDS OF ALL SCREW THREADS 30°
CUT ROUND, 1.5 THREAD RELIEF ON MACHINED THREADS
BREAK EDGES .016 MAX. ON MACHINED WORK
REMOVE BURRS, WELD SPLATTER & LOOSE SCALE
IN ACCORDANCE WITH ASME Y14.5M & B46.1

SHOP ORDERS

ACCT NO.	NO. REQD	SER NO.	-
DEL TO		DATE ISSD	-
SURFACE TREATMT		DATE REQD	-
IDENT METHOD	TAG		
PROJECT NUMBER	ATL-IP-ED-0034	US ATLAS SILICON SUBSYSTEM (Tag)	
PROJECT NAME	US ATLAS SILICON SUBSYSTEM		
DWG BY	D UKEN	DATE	29-Jun-01
CHK BY	J WIRTH	DATE	
APR BY	E ANDERSSEN	DATE	

ERNEST ORLANDO LAWRENCE BERKELEY NATIONAL LABORATORY
UNIVERSITY OF CALIFORNIA - BERKELEY

ATLAS PIXEL DETECTOR
DISK SECTOR, MODULE LOCAL SUPPORT
FACING, SECTOR NON-MOUNTSIDE

MICROFILMED:	DWG. TYPE	SHOWN ON	SCALE: 1.000	DO NOT SCALE PRINTS
	PART	21F352	SHEET 1 OF 1	
PATENT CLEAR:	DESIGN ACCT. NO.	CATEGORY CODE	DWG. NO.	SIZE / REV.
	SEE J.O.	AP6110	21F3553	1

DWG. NO.	SIZE	REV.	SH.
21F3553	1	1	1