DWG. NO. 21F5644 SIZE 1 REV. 1 SH. 1

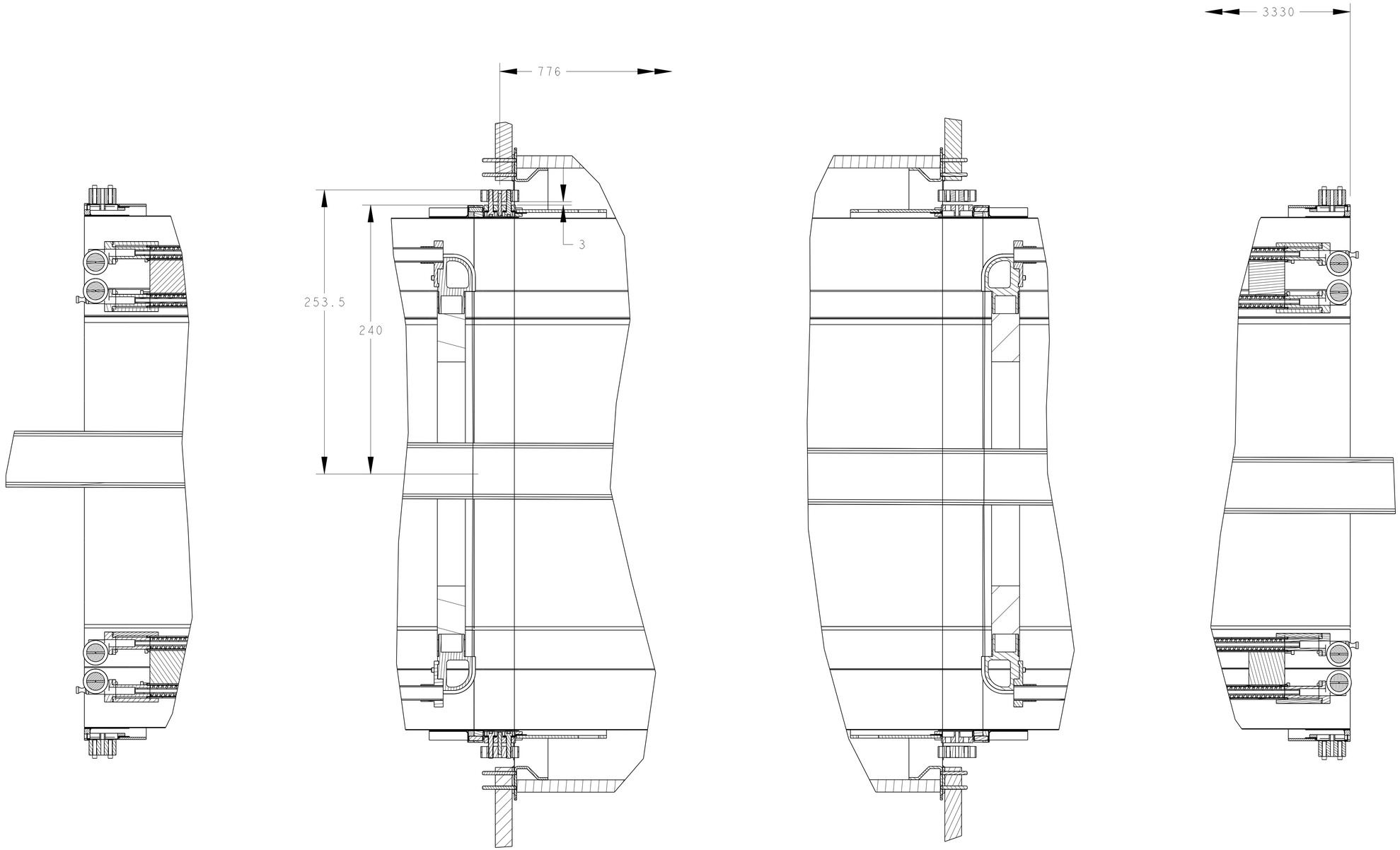

DETAIL FORWARD SIDE A
SCALE 1/2

DETAIL BARREL SIDE A
SCALE 1/2

DETAIL BARREL SIDE C
SCALE 1/2

DETAIL FORWARD SIDE C
SCALE 1/2

REV	DWG	CHK	ZONE	DATE	CHANGES

UNLESS OTHERWISE SPECIFIED

TOLERANCES		
	X.X ± 0.5	FRAC. ± 1/64
	X.XX ± 0.05	Angles ± 1.00°
	X.XXX ± 0.010	FINISH 125/(μin)

DO NOT SCALE PRINT

THREADS ARE CLASS 2
CHAMFER ENDS OF ALL SCREW TREADS 30°
CUT ROUND, 1.5 THREAD RELIEF ON MACHINED THREADS
BREAK EDGES .016 MAX. ON MACHINED WORK
REMOVE BURRS, WELD SPLATTER & LOOSE SCALE
IN ACCORDANCE WITH ASME Y14.5M & B46.1

SHOP ORDERS

ACCT NO.	NO. REQD	SER NO.	-
DEL TO		DATE ISSD	-
SURFACE TREATMT	-	DATE REQD	-
IDENT METHOD	TAG		
PROJECT NUMBER	ATLIP-ED-XXXX	US ATLAS SILICON SUBSYSTEM (Inge)	
PROJECT NAME	US ATLAS SILICON SUBSYSTEM		
DWG BY	N. HARTMAN	DATE	23-Jan-02
CHK BY	E. ANDERSSEN	DATE	
APR BY	E. ANDERSSEN	DATE	

ERNEST ORLANDO LAWRENCE
BERKELEY NATIONAL LABORATORY
UNIVERSITY OF CALIFORNIA - BERKELEY

ATLAS PIXEL DETECTOR
PIXEL SUPPORT TUBE
PST SUPPORT INTERFACE

MICROFILMED:	DWG. TYPE ASSEM	SHOWN ON	SCALE: 1/2	DO NOT SCALE PRINTS
PATENT CLEAR:	DESIGN ACCT. NO.	CATEGORY CODE AP6340	SHEET 1 OF 1	
			DWG. NO. 21F5644	SIZE 1 REV. 1

Dwg. File: 21F5644 Model File: 21F5644