DWG. NO.	SIZE	REV.	SH.
2501284		1	1

ITEM	PART NO	REQD	DESCRIPTION	MATERIAL
7	250118	1	FORWARD SHELL LAMINATE	
6	250116	1	FORWARD FLANGE ASSEMBLY	
5	250113-F	1	VEE RAIL FORWARD	-
4	250113-F	1	FLAT RAIL FORWARD	P30 EX1515
3	250104	7	HAT HOOP STIFFENER ARRAY OF THREE	-
2	250099	2	MOUNT PAD	CN60 EX1515
1	250005	1	PPI FLANGE ASSEMBLY	

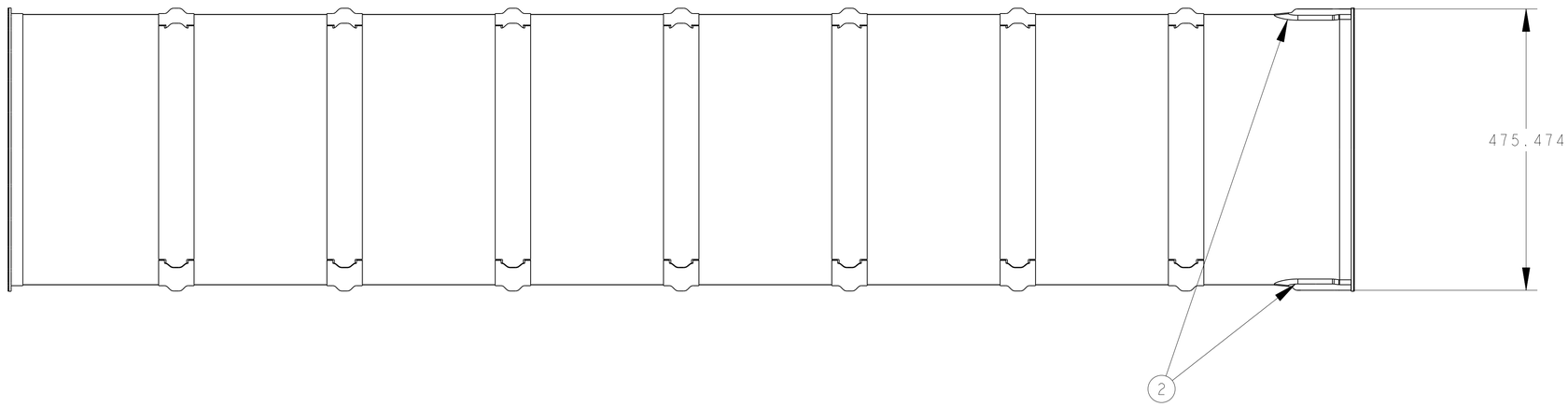

ITEMS 2 (MOUNT PAD FORWARD) ONLY ITEMS
ASSEMBLED AT THIS LEVEL--SEE LBL DWG #250127
FOR PREVIOUS ASSEMBLY DIMENSIONS

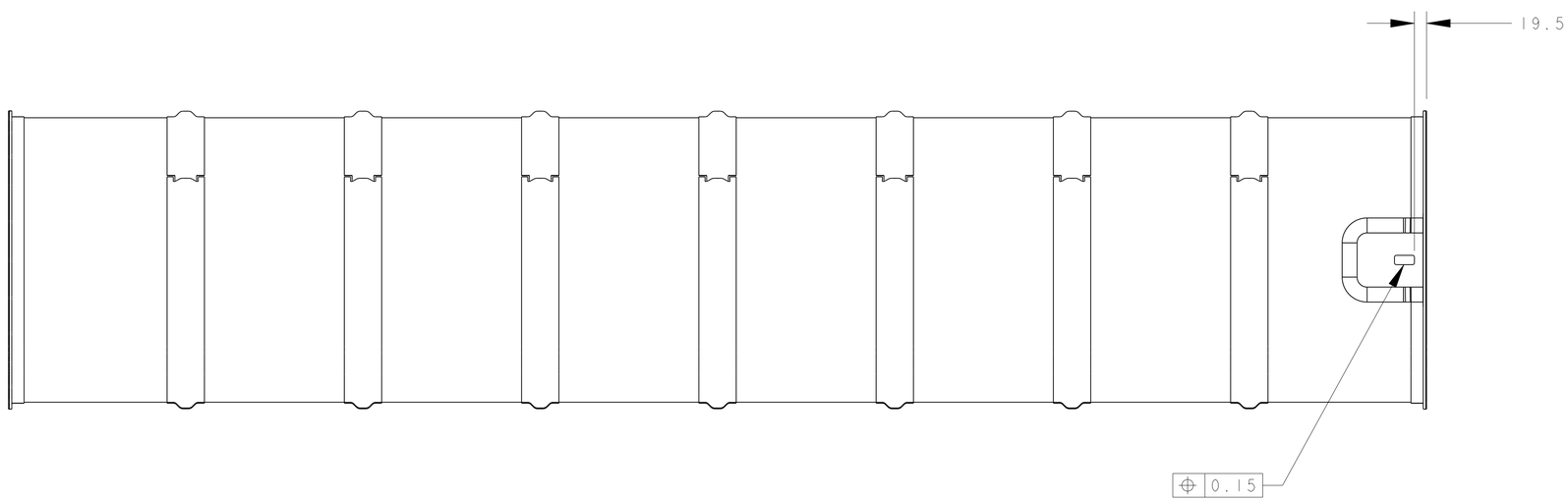

REV	DWG	CHK	ZONE	DATE	CHANGES

UNLESS OTHERWISE SPECIFIED

TOLERANCES		
	X.X ± 0.1	FRAC. ± 1/64
	X.XX ± 0.03	Angles ± 0.25°
	X.XXX ± 0.015	FINISH 125 (μin)

DO NOT SCALE PRINT

THREADS ARE CLASS 2
CHAMFER ENDS OF ALL SCREW TREADS 30°
CUT ROUND, 1.5 THREAD RELIEF ON MACHINED THREADS
BREAK EDGES .016 MAX. ON MACHINED WORK
REMOVE BURRS, WELD SPLATTER & LOOSE SCALE
IN ACCORDANCE WITH ASME Y14.5M & B46.1

SHOP ORDERS

ACCT NO.	NO. REQD	SER NO.	-
DEL TO		DATE ISSD	-
SURFACE TREATMT		DATE REQD	-
IDENT METHOD	TAG		
PROJECT NUMBER		US ATLAS SILICON SUBSYSTEM (Image)	
PROJECT NAME	US ATLAS SILICON SUBSYSTEM		
DWG BY	HARTMAN	DATE	17-Feb-03
CHK BY	ANDERSSEN	DATE	
APR BY	GILCHRIESE	DATE	

ERNEST ORLANDO LAWRENCE
BERKELEY NATIONAL LABORATORY
UNIVERSITY OF CALIFORNIA - BERKELEY

ATLAS PIXEL DETECTOR
PIXEL SUPPORT TUBE
FORWARD SHELL C WITH MOUNT PADS

MICROFILMED:	DWG. TYPE	SHOWN ON	SCALE: 1/5	DO NOT SCALE PRINTS
	ASSEM		SHEET 1 OF 1	
PATENT CLEAR:	DESIGN ACCT. NO.	CATEGORY CODE	DWG. NO.	SIZE / REV.
	PIAPII	AP6300	2501284	1

Dwg. File: 250128 Model File: 250128