DWG. NO.	SIZE	REV.	SH.
27D3592		-	1

DESCRIPTION	MATERIAL	MAT. LOCATION
-	PEEK	-

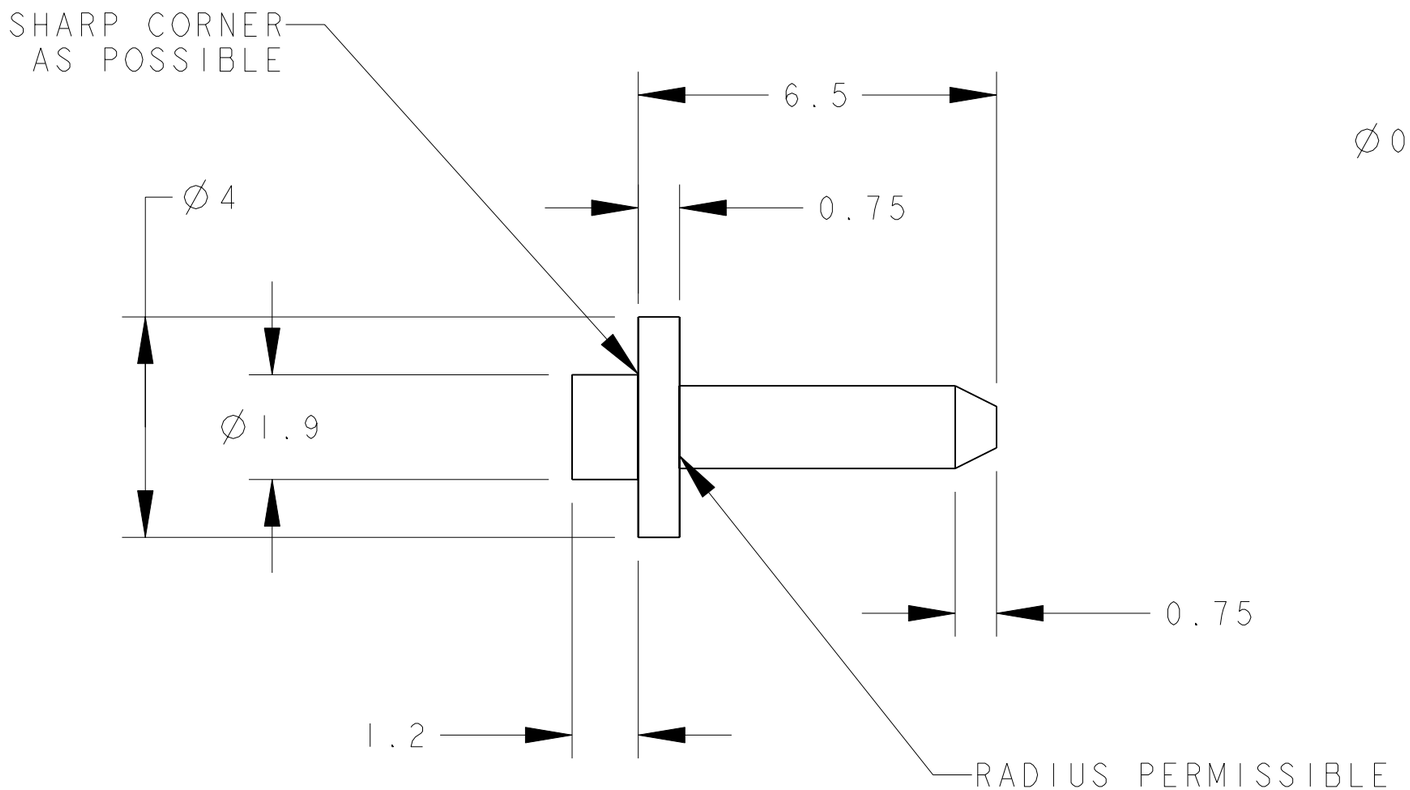

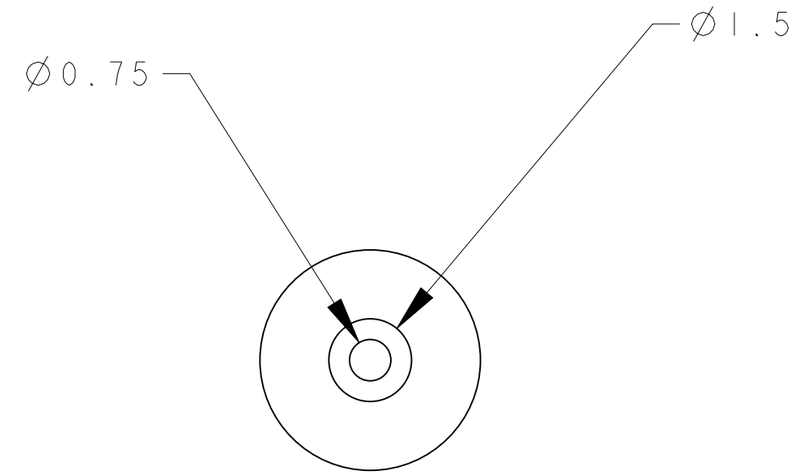

REV	DWG	CHK	ZONE	DATE	CHANGES

UNLESS OTHERWISE SPECIFIED

TOLERANCES		
	X.X ± 0.5	FRAC. ± 1/64
	X.XX ± 0.05	Angles ± 1.00°
	X.XXX ± 0.010	FINISH 125 √(μin)

DO NOT SCALE PRINT

THREADS ARE CLASS 2
CHAMFER ENDS OF ALL SCREW TREADS 30°
CUT ROUND, 1.5 THREAD RELIEF ON MACHINED THREADS
BREAK EDGES .016 MAX. ON MACHINED WORK
REMOVE BURRS, WELD SPLATTER & LOOSE SCALE
IN ACCORDANCE WITH ASME Y14.5M & B46.1

SHOP ORDERS

ACCT NO.		NO. REQD 350	
DEL TO	S DARDIN		
SURFACE TREATMT	-		
IDENT METHOD	TAG		
PROJECT NUMBER	N/A		
PROJECT NAME	N/A		
DWG BY	ANDERSSEN	DATE	07-Dec-05
CHK BY	ANDERSSE	DATE	12/5/05
APR BY	ANDERSSEN	DATE	12/5/05

SER NO.	-
DATE ISSD	-
DATE REQD	-

N/A (logo)

ERNEST ORLANDO LAWRENCE BERKELEY NATIONAL LABORATORY
UNIVERSITY OF CALIFORNIA - BERKELEY

ATLAS PIXEL DETECTOR
TYPE I SERVICE SUPPORTS
OPTOBOARD MOUNT PIN

MICROFILMED:	DWG. TYPE	SHOWN ON	SCALE: 9/1	DO NOT SCALE PRINTS
	PART		SHEET 1 OF 1	
PATENT CLEAR:	DESIGN ACCT. NO.	CATEGORY CODE	DWG. NO.	SIZE / REV.
	PIAPII	AP6430	27D3592	-

Rev. 1/8/2001 ATLAS

Dwg. File: 27D359 Model File: OPTO_MOUNTING_PIN