DWG. NO.	SIZE	REV.	SH.
21F6104		-	1

DESCRIPTION	MATERIAL	MAT. LOCATION
-	-	-

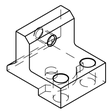

SCALE 2/1
21F6104-1 QTY 80

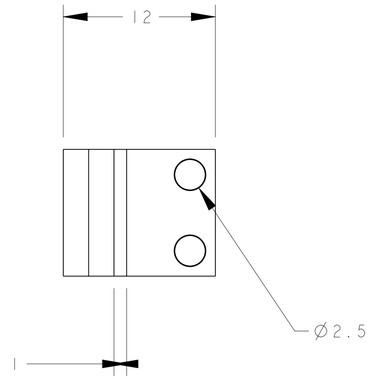

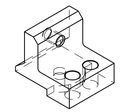

SCALE 2/1
21F6104-2 QTY 40

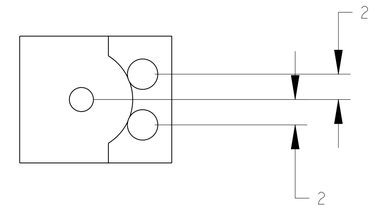

SCALE 4/1
MOUNT HOLES 'ISP' SPACING

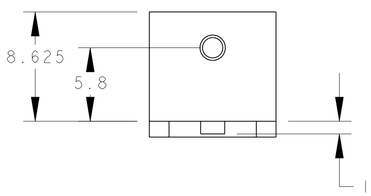

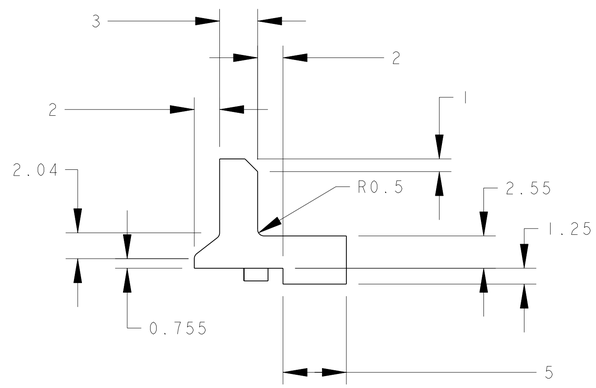

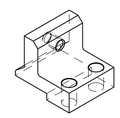

SCALE 2/1
21F6104-3 QTY 40

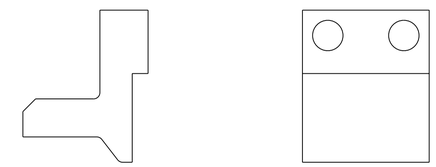

SCALE 4/1
NO NIB OPTION

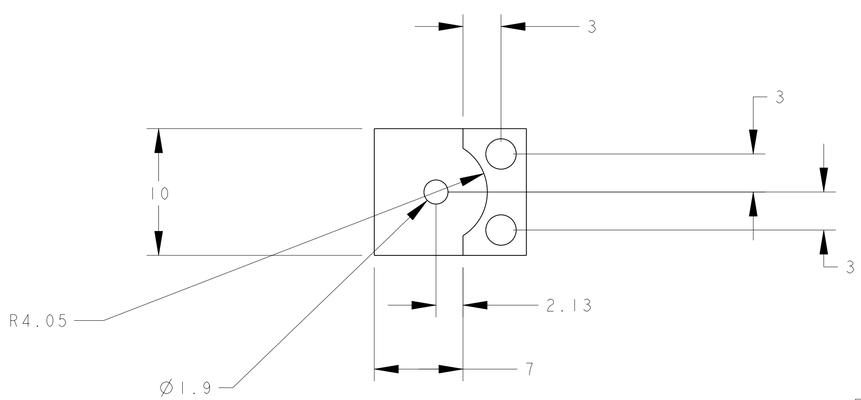

SCALE 4/1

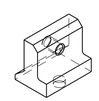

SCALE 2/1
21F6104-4 QTY 40

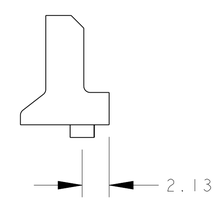

SCALE 4/1
NO MOUNT OPTION

THERE ARE FOUR DIFFERENT PARTS HERE
THEY TAKE ALL DIMENSIONS FROM PRIMARY VIEW WHERE NOT OTHERWISE SPECIFIED
ADDITIONAL DIMENSIONS OR CHANGED FEATURES INDICATED IN VIEWS TO RIGHT

REV	DWG	CHK	ZONE	DATE	CHANGES

UNLESS OTHERWISE SPECIFIED

TOLERANCES		
	X.X ± 0.5	FRAC. ± 1/64
	X.XX ± 0.05	Angles ± 1.00°
	X.XXX ± 0.010	FINISH 125 √(μin)

DO NOT SCALE PRINT
THREADS ARE CLASS 2
CHAMFER ENDS OF ALL SCREW TREADS 30°
CUT ROUND, 1.5 THREAD RELIEF ON MACHINED THREADS
BREAK EDGES .016 MAX. ON MACHINED WORK
REMOVE BURRS, WELD SPLATTER & LOOSE SCALE
IN ACCORDANCE WITH ASME Y14.5M & B46.1

SHOP ORDERS

ACCT NO.	NO. REQD	SER NO.	-
DEL TO	J WIRTH	DATE ISSD	-
SURFACE TREATMT	-	DATE REQD	-
IDENT METHOD	TAG		
PROJECT NUMBER	N/A		
PROJECT NAME	N/A		
DWG BY	ANDERSSEN	DATE	19-Jul-05
CHK BY	ANDERSSEN21F	DATE	7/19/05
APR BY	ANDERSSEN	DATE	7/19/05

Not Illegal

ERNEST ORLANDO LAWRENCE
BERKELEY NATIONAL LABORATORY
UNIVERSITY OF CALIFORNIA - BERKELEY

ATLAS PIXEL DETECTOR
SERVICE PANEL STRUCTURES
PP0 SUPPORT BLOCKS

MICROFILMED:	DWG. TYPE	SHOWN ON	SCALE: 8/1	DO NOT SCALE PRINTS
	PART		SHEET 1 OF 1	
PATENT CLEAR:	DESIGN ACCT. NO.	CATEGORY CODE	DWG. NO.	SIZE	REV.
	P1AP11	AP6400	21F6104	-

Dwg. File: 21F6104_Model_File: PP0_PANEL_BLOCK_MID_LOWER