DWG. NO.	SIZE	REV.	SH.
2501852	2	1	

DESCRIPTION	MATERIAL	MAT. LOCATION
Mill	Al 6061-T6	-

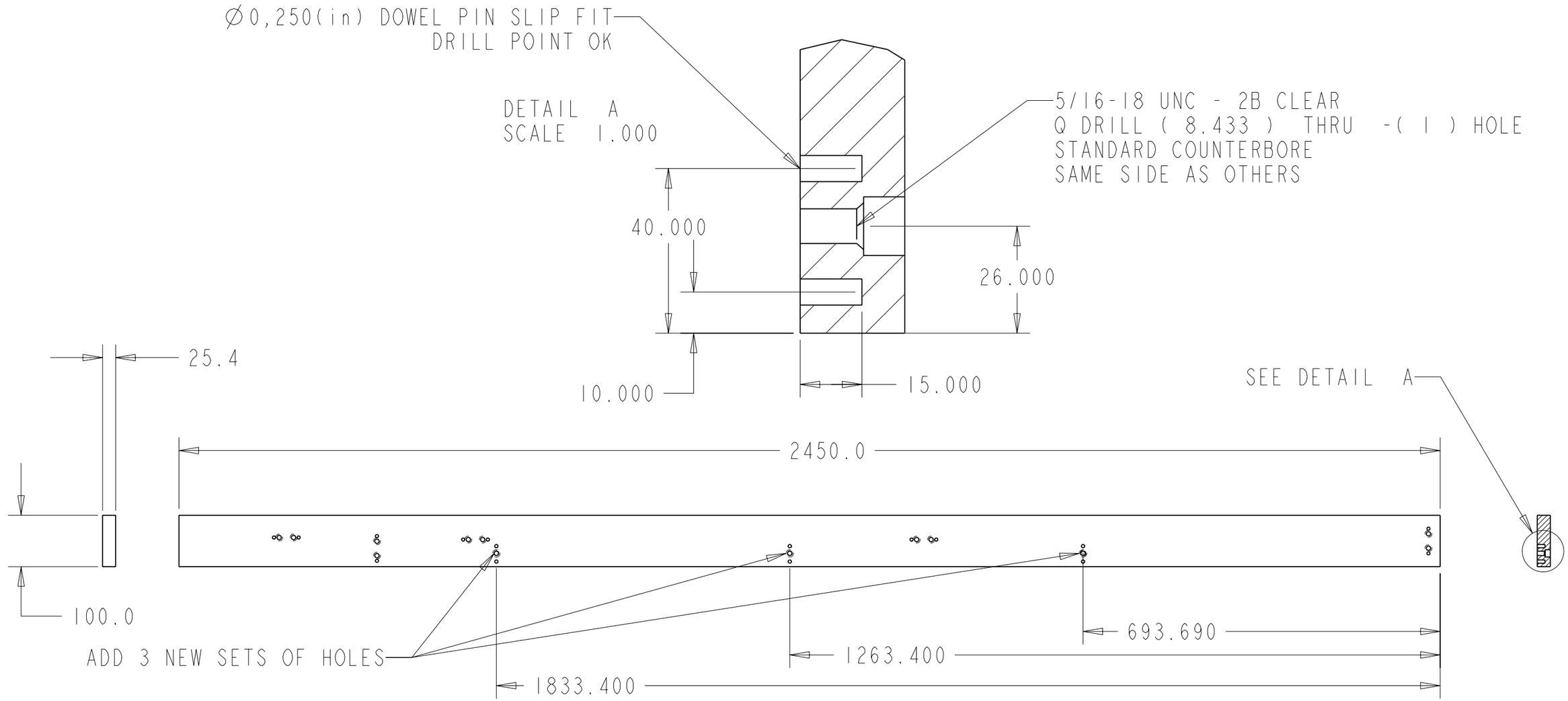

REV	DWG	CHK	ZONE	DATE	CHANGES

UNLESS OTHERWISE SPECIFIED

TOLERANCES		
	X.X ± 0.25	FRAC. ± 1/64
	X.XX ± 0.10	Angles ± 0.50°
	X.XXX ± 0.05	FINISH 125 √(μin)

DO NOT SCALE PRINT

THREADS ARE CLASS 2
CHAMFER ENDS OF ALL SCREW TREADS 30°
CUT ROUND, 1.5 THREAD RELIEF ON MACHINED THREADS
BREAK EDGES .016 MAX. ON MACHINED WORK
REMOVE BURRS, WELD SPLATTER & LOOSE SCALE
IN ACCORDANCE WITH ASME Y14.5M & B46.1

SHOP ORDERS

ACCT NO.		NO. REQD 1	DATE ISSD -
DEL TO	E Anderssen		DATE REQD -
SURFACE TREATMT	Clear Anodize		
IDENT METHOD	TAG		
PROJECT NUMBER			(logo)
PROJECT NAME			
DWG BY	D Uken		DATE 05-Sep-03
CHK BY	N Hartman		DATE
APR BY	E Andersse		DATE

SER NO. -

ERNEST ORLANDO LAWRENCE BERKELEY NATIONAL LABORATORY
UNIVERSITY OF CALIFORNIA - BERKELEY

ATLAS PIXEL DETECTOR
BEAM PIPE AND SERVICES SUPPORT
Longeron Support Assy Fixture Baseplate

MICROFILMED:	DWG. TYPE	SHOWN ON	SCALE: 0.125	DO NOT SCALE PRINTS
	PART	250184	SHEET 1 OF 1	
PATENT CLEAR:	DESIGN ACCT. NO.	CATEGORY CODE	DWG. NO.	SIZE / REV.
	See WebJO	API000	2501852	2

Rev_1/8/2001 ATLAS

Dwg. File: 250185 Model File: 250185