DWG. NO.	SIZE	REV.	SH.
21F7904			1

DESCRIPTION	MATERIAL	MAT. LOCATION
-	STAINLESS	-

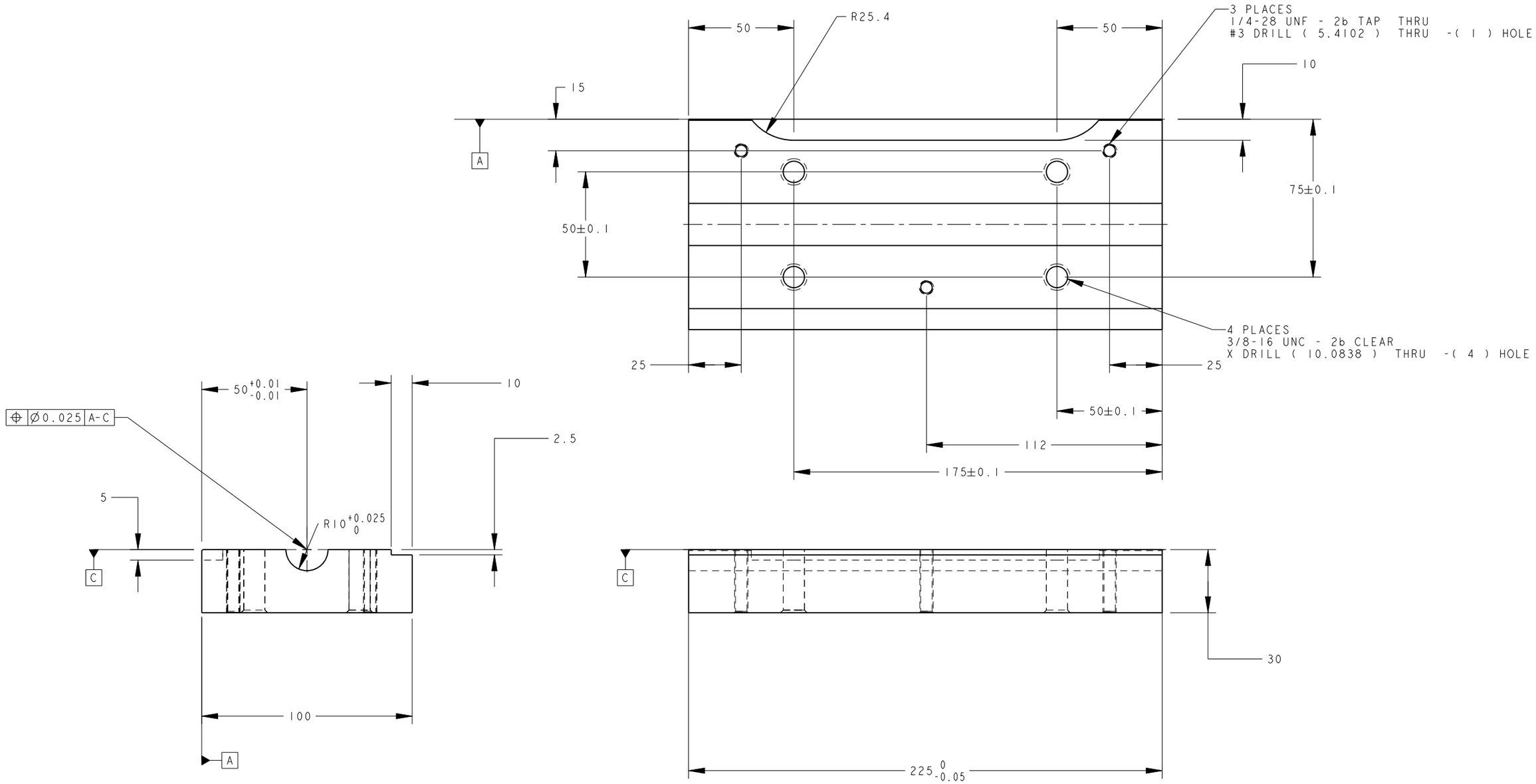

REV	DWG	CHK	ZONE	DATE	CHANGES

UNLESS OTHERWISE SPECIFIED

TOLERANCES		
	X.X ± 0.5	FRAC. ± 1/64
	X.XX ± 0.05	Angles ± 1.00°
	X.XXX ± 0.010	FINISH 125 √(μin)

DO NOT SCALE PRINT

THREADS ARE CLASS 2
CHAMFER ENDS OF ALL SCREW TREADS 30°
CUT ROUND, 1.5 THREAD RELIEF ON MACHINED THREADS
BREAK EDGES .016 MAX. ON MACHINED WORK
REMOVE BURRS, WELD SPLATTER & LOOSE SCALE
IN ACCORDANCE WITH ASME Y14.5M & B46.1

SHOP ORDERS

ACCT NO.	JO	NO. REQD	2
DEL TO	WIRTH		
SURFACE TREATMT			
IDENT METHOD	TAG		
PROJECT NUMBER			
PROJECT NAME	N/A		
DWG BY	ANDERSSEN	DATE	20-Jan-04
CHK BY	HARTMAN	DATE	1/21/04
APR BY	ANDERSSEN	DATE	1/20/04

SER NO. -
DATE ISSD -
DATE REQD -

Mrk (legs)

ERNEST ORLANDO LAWRENCE BERKELEY NATIONAL LABORATORY
UNIVERSITY OF CALIFORNIA - BERKELEY

ATLAS PIXEL DETECTOR
BEAM PIPE AND SERVICES SUPPORT
LONGERON TOOL CAP END

MICROFILMED:	DWG. TYPE	SHOWN ON	SCALE: 1/1	DO NOT SCALE PRINTS
	PART		SHEET 1 OF 1	
PATENT CLEAR:	DESIGN ACCT. NO.	CATEGORY CODE	DWG. NO.	SIZE
	PIABII	AP8300	21F7904	REV.

Dwg. File: 21F7904 Model File: LONGERON-TOOL-CAP.END