DWG. NO. 27A0012 | SIZE 1 | REV. 1 | SH. 1

DESCRIPTION	MATERIAL	MAT. LOCATION
Waterjet cut honeycomb core from Ultracor	UCS-102-3/8-3.0 x 23mm thick	-

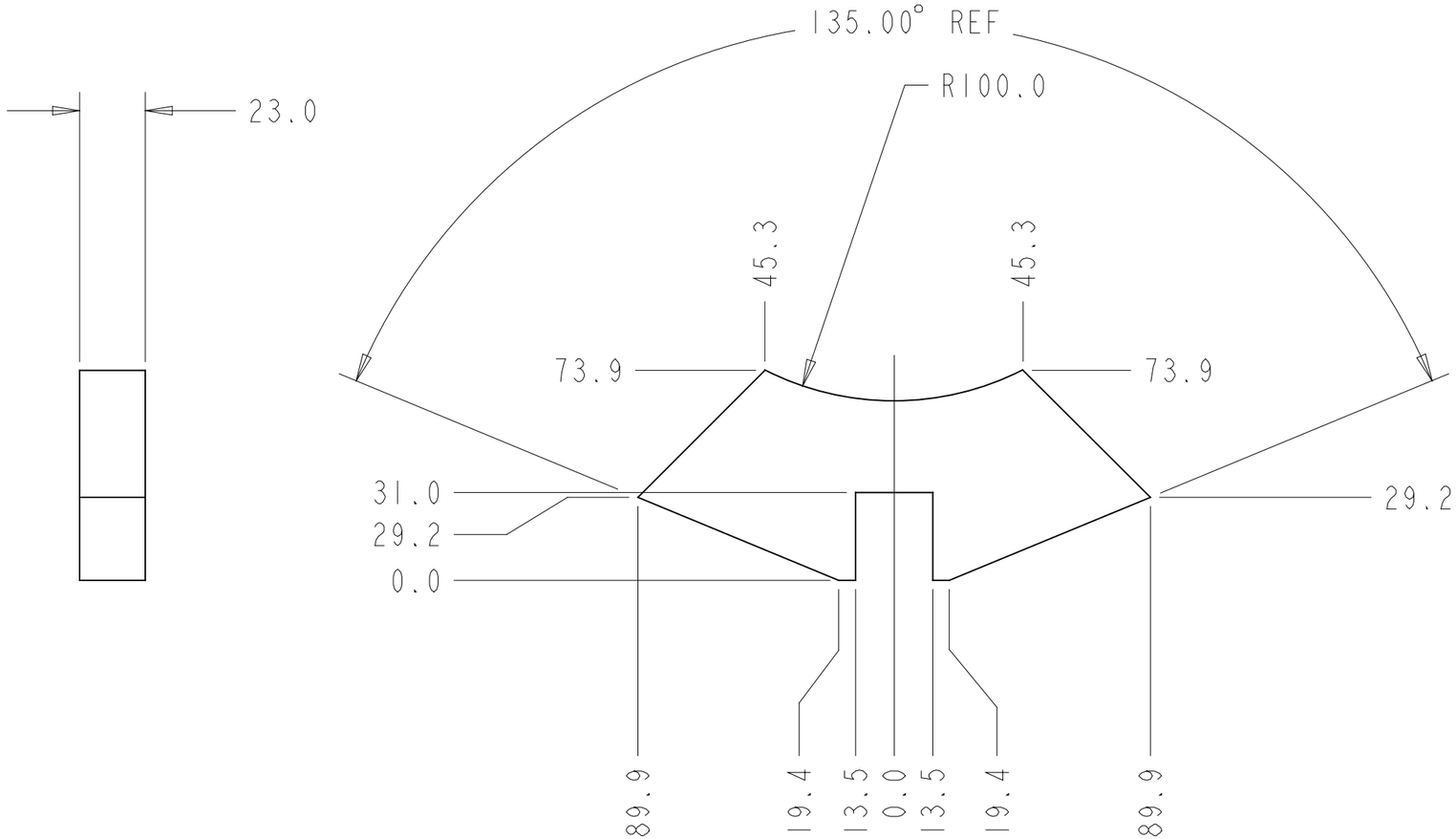

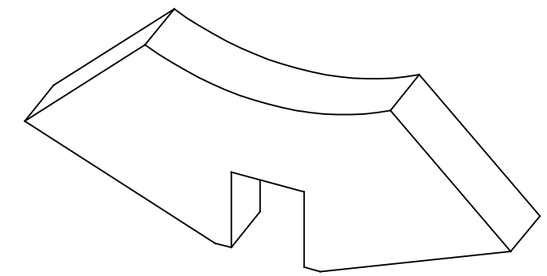

REV	DWG	CHK	ZONE	DATE	CHANGES

UNLESS OTHERWISE SPECIFIED

TOLERANCES		
	X.X ± 0.5	FRAC. ± 1/64
	X.XX ± 0.05	Angles ± 1.00°
	X.XXX ± 0.010	FINISH 125 √ (µin)

DO NOT SCALE PRINT

THREADS ARE CLASS 2
CHAMFER ENDS OF ALL SCREW TREADS 30°
CUT ROUND, 1.5 THREAD RELIEF ON MACHINED THREADS
BREAK EDGES .016 MAX. ON MACHINED WORK
REMOVE BURRS, WELD SPLATTER & LOOSE SCALE
IN ACCORDANCE WITH ASME Y14.5M & B46.1

SHOP ORDERS

ACCT NO.		NO. REQD 2	
DEL TO	E Anderssen		
SURFACE TREATMT			
IDENT METHOD	TAG		
PROJECT NUMBER			
PROJECT NAME	Ultracor		
DWG BY	D Uken	DATE	08-Oct-03
CHK BY	N Hartman	DATE	
APR BY	E Anderssen	DATE	

SER NO. -
DATE ISSD -
DATE REQD -
Ultracor (logo)

ERNEST ORLANDO LAWRENCE BERKELEY NATIONAL LABORATORY
UNIVERSITY OF CALIFORNIA - BERKELEY

ATLAS PIXEL DETECTOR
BEAM PIPE AND SERVICES SUPPORT
Beampipe Cruciform Support Panel, Forward Wedge

MICROFILMED:	DWG. TYPE	SHOWN ON	SCALE: 0.500	DO NOT SCALE PRINTS
	PART	250152	SHEET 1 OF 1	
PATENT CLEAR:	DESIGN ACCT. NO.	CATEGORY CODE	DWG. NO. 27A0012	SIZE / REV. 1
	See WebJO	API000		

Rev. 1/8/2001 ATLAS

Dwg. File: 27A001 Model File: 27A001