REQ	ITEM	PART NUMBER	DESCRIPTION
-	-	-	BRASS ROD, TYPE C36000

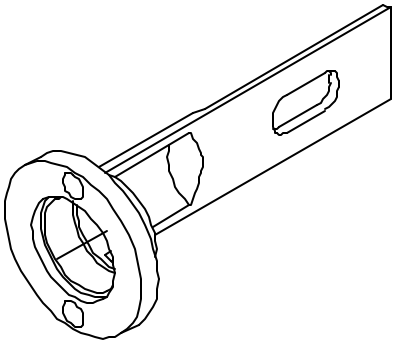

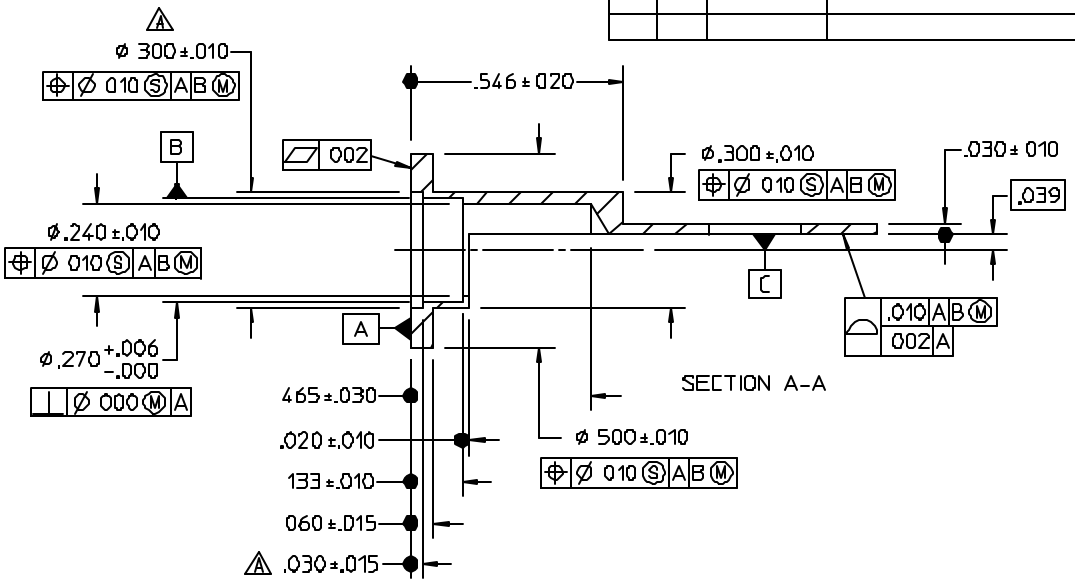

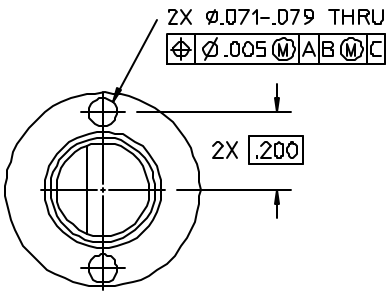

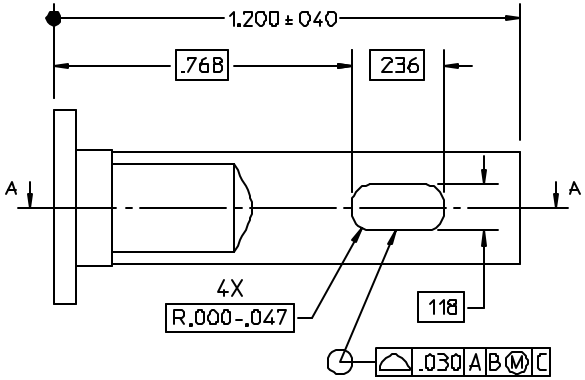

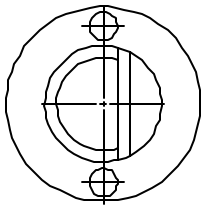

25M0253A

REV	DWG	CHK	ZONE	DATE	CHANGES
A	KF	-	-	6-02	ADDED GLUING CLEARANCE C'BORE

UNLESS OTHERWISE SPECIFIED
TOLERANCES: .X ± - | FRAC ± - | XX ± - | ANGLES ±- | XXX ± - | SURFACE FINISH Ra16 Rmax32
THREADS ARE CLASS 2
CHAMFER ENDS OF ALL SCREW THREADS 30° (W) 1.5 PITCH THRU RELIEF WITH ROUND NOSE TOOL ON MACHINE CUT THREADS
BREAK EDGES .016 MAX ON MACHINED WORK
REMOVE BURRS WELD SPLATTER & LOOSE SCALE
REFERENCES ASME Y14.5M-1994 & ANSI B46.1.

SHOP ORDERS
ACCT NO | SERIAL NO
DATE ISSUED | DATE REQD | NO REQD
DELIVER TO
SURFACE TREATMENT UHV CLEAN
IDENT METH -
DWG BY K.Franck | DATE -
CHK BY - | DATE -

LAWRENCE BERKELEY LABORATORY
UNIVERSITY OF CALIFORNIA-BERKELEY
TECHNICAL INTEGRATION GROUP - PROJECTS
NCEM, JEOL MICROSCOPE
IC PROBE, SAMPLE MOUNT

PATENT CLEAR	DWG. TYPE	SHOWN ON	SCALE 4 : 1	DO NOT SCALE PRINTS
MICROFILMED	DESIGN ACCT NO -	CATEGORY CODE TI0103	DWG NO. 25M0253A	SIZE REV

SHEET 1 OF 1