ORIGINAL LSME-798

M-7823 M#6

Light Source Notes

44 Page

Assigned Number: LSME-798

Date of Entry: 11-09-99

Author: Corradi, C.A.

Title: Thermal and Structural Analysis

Other Number: n/a M7823

S

LAWRENCE BERKELEY LABORATORY - UNIVERSITY OF CALIFORNIA **ENGINEERING NOTE**	CODE AL-0588	SERIAL M7823	PAGE 1 of 3
AUTHOR C. A. Corradi	DEPARTMENT Mechanical Engineering	LOCATION 46-275G	DATE October 28, 1999
PROGRAM_PROJECT_JOB ALS Storage Ring		LSME 798	
Superbend - Photon Stops/Blank Flanges			
TITLE Thermal and Structural Analysis			

SUMMARY

The Superbend Beamlines experience higher flux on photon stops than bend magnet beamlines. The existing water-cooled stop design is analyzed to assess the affect of the increased power loads on both OFHC and Glidcop® stops. Results of the finite element analysis are presented below.

INTRODUCTION

The Superbend magnets produce a power distribution about four times that of the existing ALS bend magnets. The current photon stops are directly cooled OFHC, designed to sustain a maximum power load of about 1 kW. The stops have some measure of design margin with respect to heat loading but the extent of that margin is difficult to quantify. Based on preliminary analysis results, it was decided to manufacture superbend stops out of Glidcop® to provide a greater margin for thermal stress. Since there is a wide range of incident power based on the stop location, further analysis is done to qualify the Glidcop® stops. The OFHC stop is analyzed at the lowest power location to determine it if will sustain superbend loads.

DISCUSSION

The ANSYS program was used to create three dimensional finite element models of the photon stop. The stop was modeled using solid tetrahedral elements and an automatic mesher. The thermal model is used to calculate the temperature distribution under superbend power which is then input as the structural temperature load for the stress model.

Several preliminary finite element models were created to assess the various configurations under ideal and mis-steer conditions. Models for each location are the same but are cut in some cases as the actual stops in certain locations are modified to provide clearance for adjacent beam. A complete analysis includes thermal and stress analysis of the ideal and mis-steer power conditions under normal and low water flow conditions. (Since early results indicated no significant difference from the full to the cut stop, only the full model was retained.)

Figure 1a. shows a sketch of the photon stop. It is a brazed assembly with rectangular cooling channels. Nominally, water is flowed through the stop at room temperature at a rate of 1 GPM, though onsite measurements revealed a minimum flow rate of about 0.3 GPM in one of the water circuits. Anticipated heat loads vary from about 1132 W to 4 kW, depending upon the location of the exit port, distance from the source and beam footprint. (See Table I.) At the lower power conditions, the existing design might sustain the superbend power load.

Figure 2 shows the FE model with the applied loads and boundary conditions. (Appendix I contains tabulated heat loads for each stop.) Table I lists the material properties and geometric parameters common to all of the models, as well as the predicted heat loads for each location. (Appendix II shows the convection coefficient calculations.)

The peak power loads on stop #4 are about 15% higher than those of stop #5, but the total power on #5 is more than twice that of #4. Early FE results indicated that stop #5 sees the worst case thermal stress. Thus, stop #5 was selected for complete thermal and stress analysis.

Stop #6 is furthest from the source and has the lowest incident power. However, it is of particular interest as beamline and assembly schedules make a strong case for keeping the design unchanged if at all possible. Since the #6 stop experiences lower heat loads, (on the order of 1KW) it was deemed worthwhile to analyze the OFHC stop under these superbend loads.

Finally, the blank-off flange (Figure 1b.) is analyzed under nominal conditions.

RESULTS

Figures 3 through 5 show temperature profiles and resulting stress distributions for stops #5 and #6, and the blank-off flange. The maximum stresses on these plots would be unacceptably high if they represented actual stresses. However, these stresses arise due to the simplifying model assumption that the face to backplate braze joint is a homogeneous material connection. The geometry that results from this assumption creates large stress raisers in the form of the deep crevices. (See Figure 6.) Since these brazed photon stops have been in service for some years, it is reasonable to assume the real operating stresses associated with the braze geometry are acceptable.

Comparing the models,

Model	Load (W)	Predicted Max Stress (ksi)	Material Allowable Stress (ksi)
Non-superbend (OFHC)	1000	29	10
Superbend (Glidcop®)	4000	86	43

it is apparent that the load increased by a factor of 4 while the predicted max stress increased by a factor of about 3. Since the allowable for Glidcop® is about four times that of OFHC, it follows that the Glidcop® stop should perform about as well as the OFHC stop under the worst case conditions. As the actual stresses are difficult to quantify, these ratios offer a qualitative assessment of stress under real conditions.

Table II summarizes the delta-T, realistic stress values and safety factors for the various load cases. The largest real stresses occur in the vicinity of the highest incident power loads.

CONCLUSIONS

The temperature rise and resulting stresses are acceptable even for the mis-steer on stop #5 provided it is manufactured from Glidcop® and sees nominal water flow. The anticipated loads on stop #6 make it marginal for OFHC under the worst case conditions, but as its use will be temporary, it is also deemed acceptable. The blank-off flange temperatures and stresses are within acceptable limits.

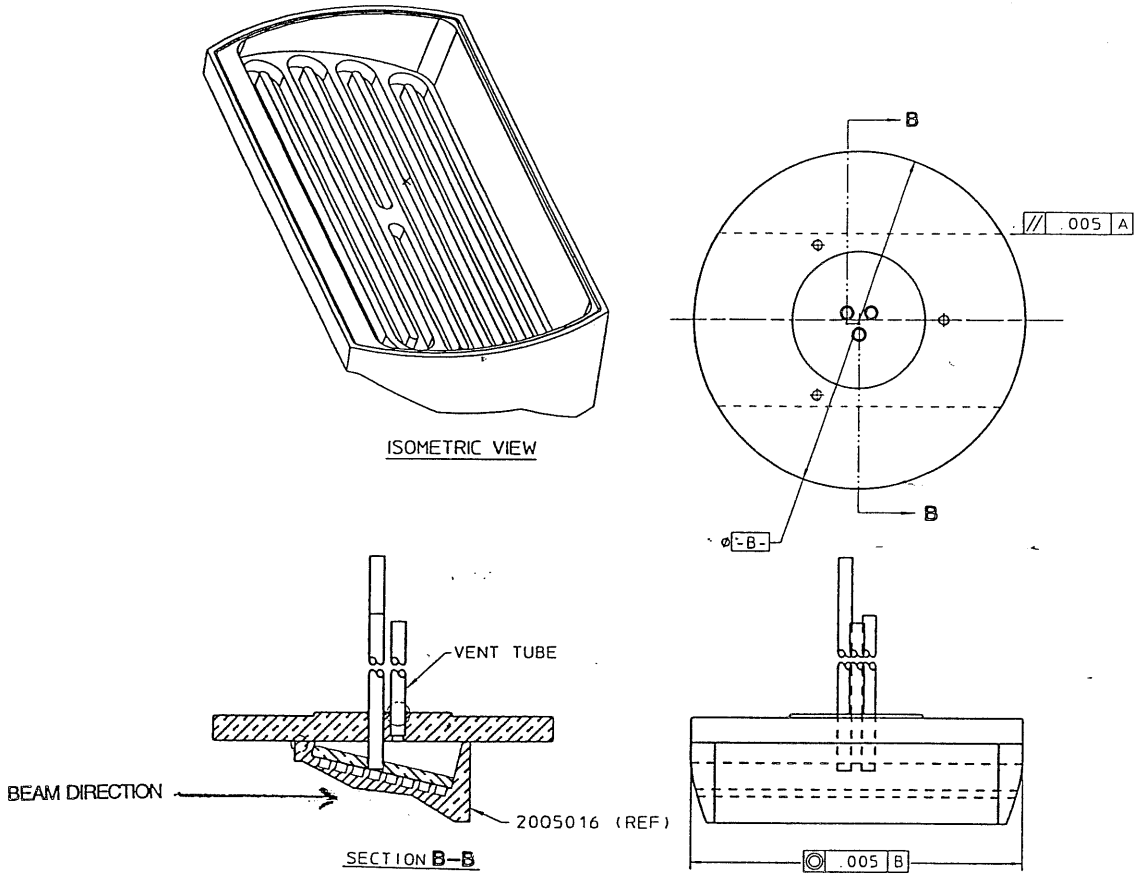

Figure 1a. Photon Stop.

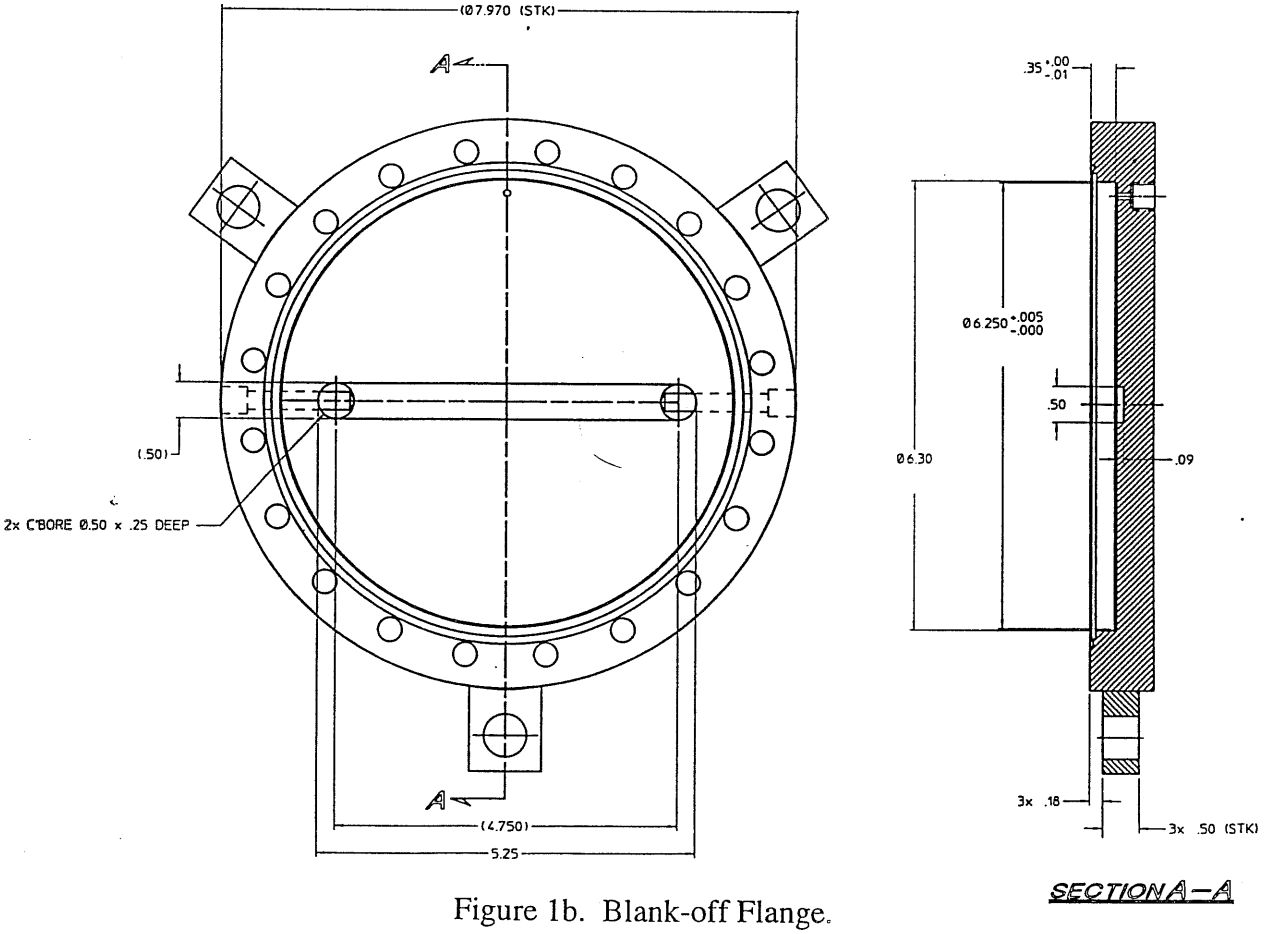

Figure 1b. Blank-off Flange.

TABLE I. Material Properties, Model Parameters, and Heat Loads

i.) Material Property Table.

Material	E (MPa)	α	k (W/mm–K))	Yield Strength (ksi)
OFHC	119e3	1.77e–5	.399	10
304 Stainless	193e3	1.73e–5	.0162	33 – 35
Glidcop (AL–15)	131e3	1.66e–5	.365	37 – 48

ii.) Model Parameters.

Heat Loads:

Location	Total Power (W)	Peak Power (W/mm^2)
Stop #4	2109	5.7
Stop #5	4400	4.9
Stop #6	1130	1.3
Blank–off Flange	1165	11.5

Convection Conditions:

Channel Dimensions (mm x mm)	Flow Rate (GPM)	Hf (W/mm^2– °C)
Stop: 4.8 x 4.1	1.0	.0152
Stop: 4.8 x 4.1	0.3	.007
Flange: 2.3 x 12.7	1.0	.011

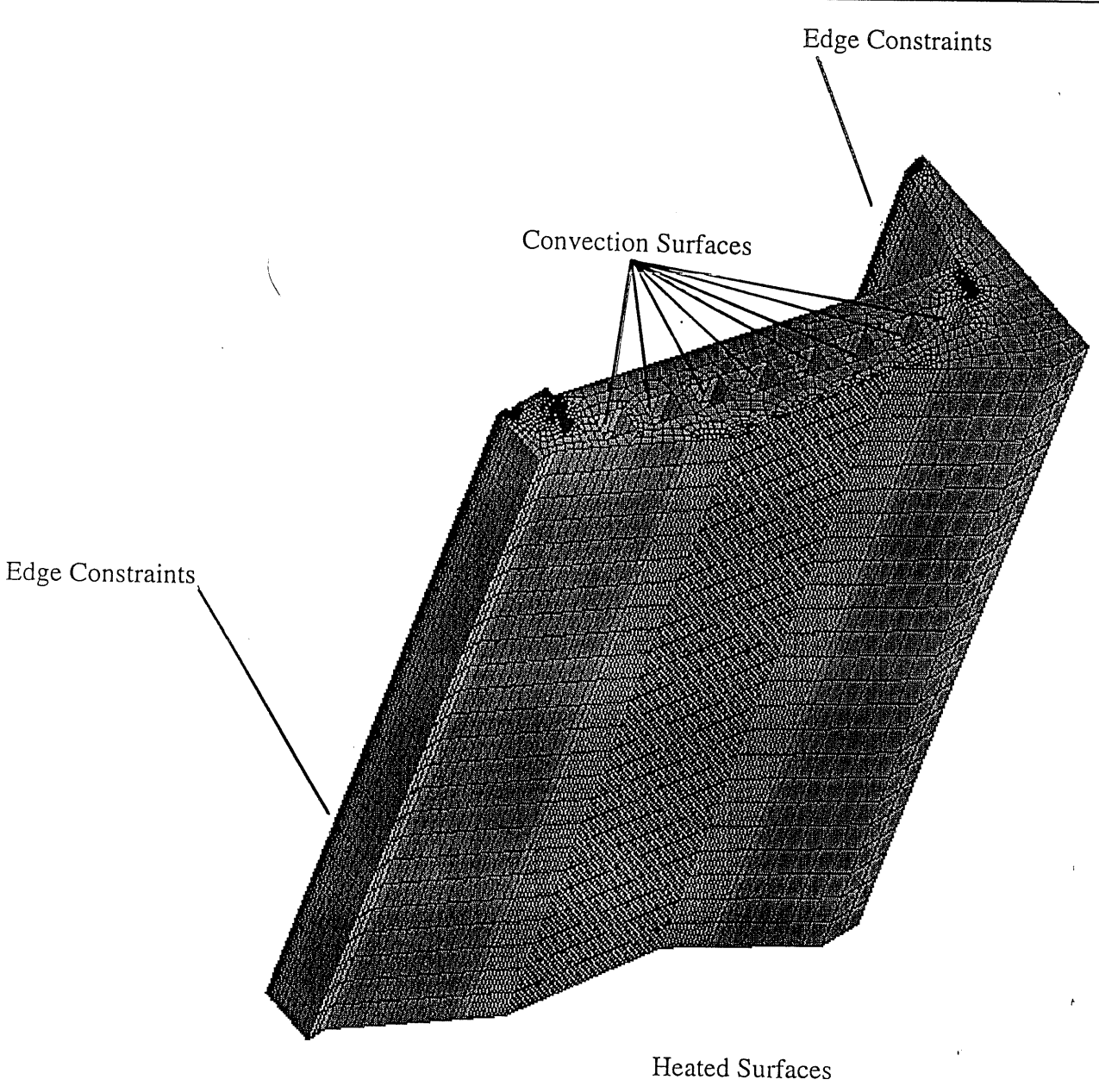

Figure 2. Finite Element Model for Photon Stop.

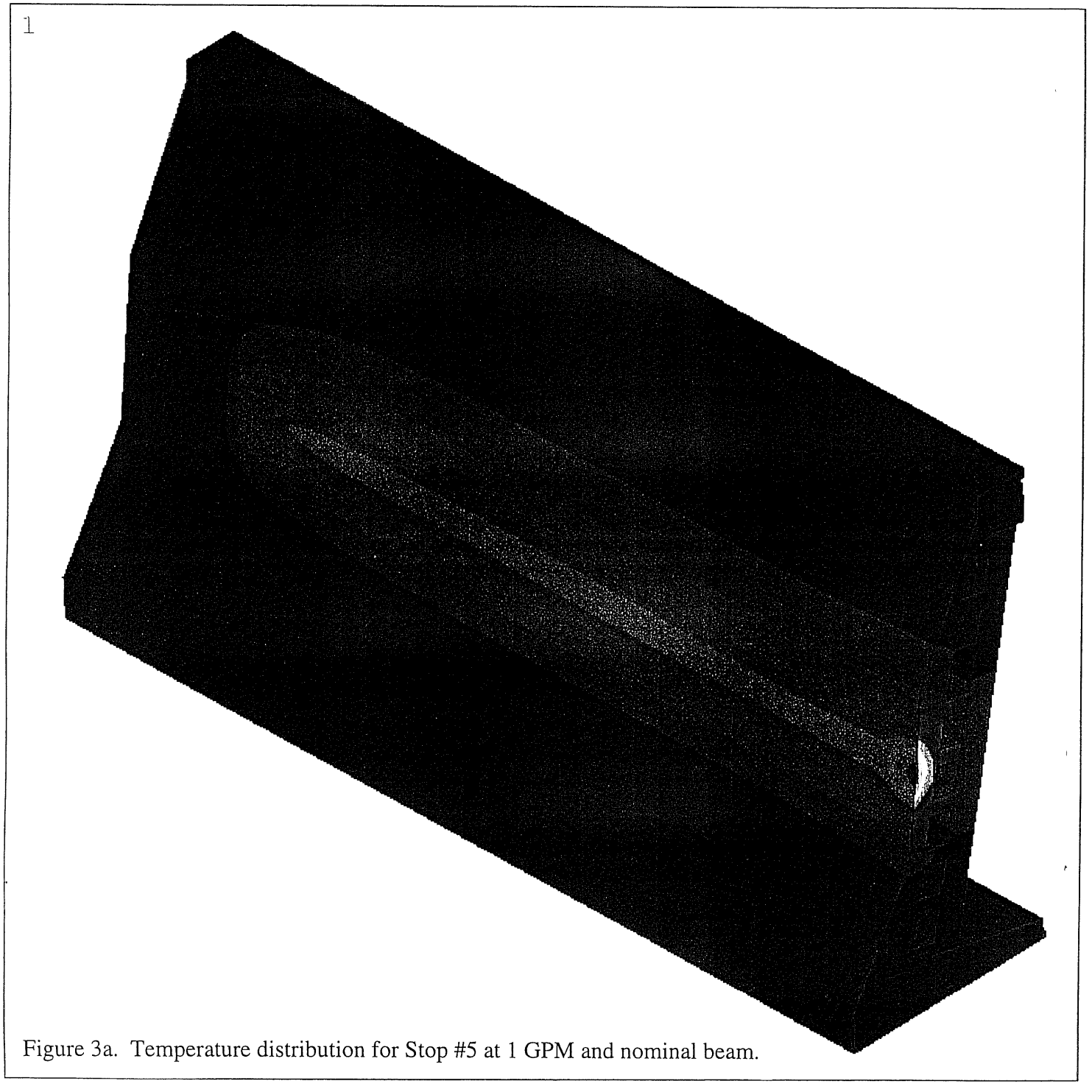

Figure 3a. Temperature distribution for Stop #5 at 1 GPM and nominal beam.

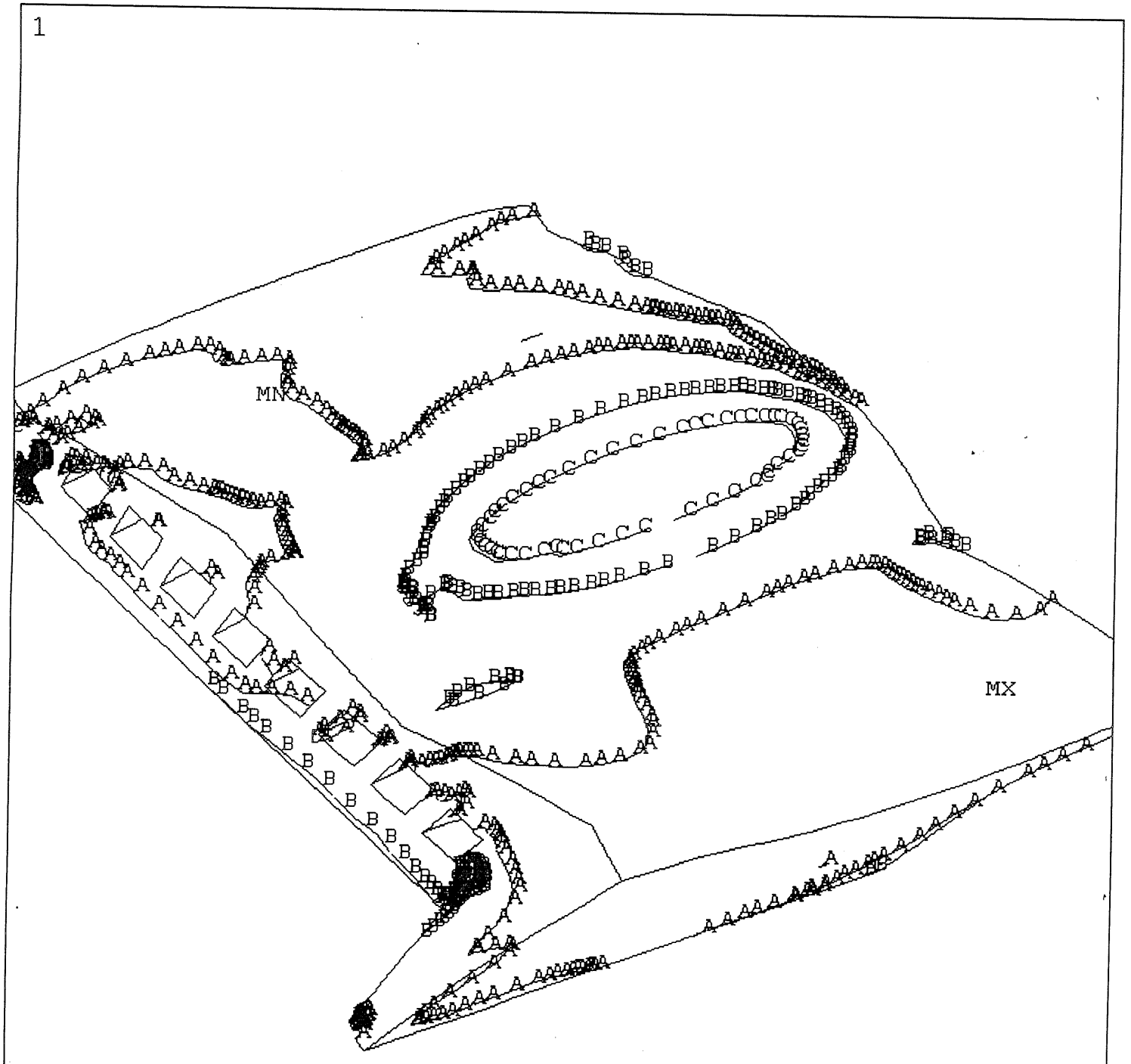

ANSYS 5.4
OCT 27 1999
14:37:25
NODAL SOLUTION
STEP=1
SUB =1
TIME=1
SEQV (AVG)
DMX =.038027
SMN =.383117
SMX =417.135
A =23.536
B =69.842
C =116.147
D =162.453
E =208.759

H =[illegible]
I =393.982

Figure 3b. Equivalent stress distribution for Stop #5 at 1 GPM and nominal beam.

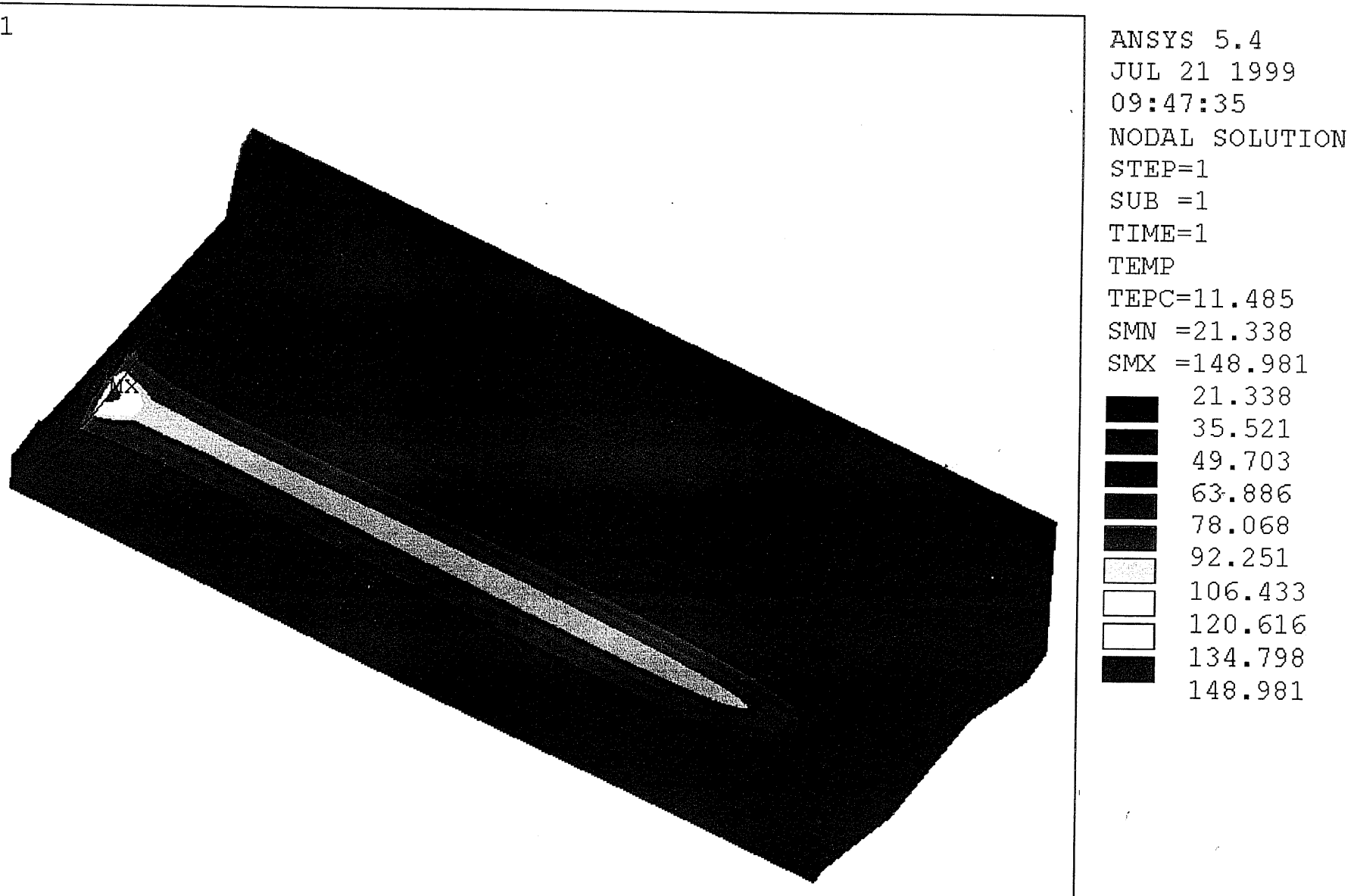

Figure 3c. Temperature distribution for Stop #5 at 1 GPM and mis-steered beam.

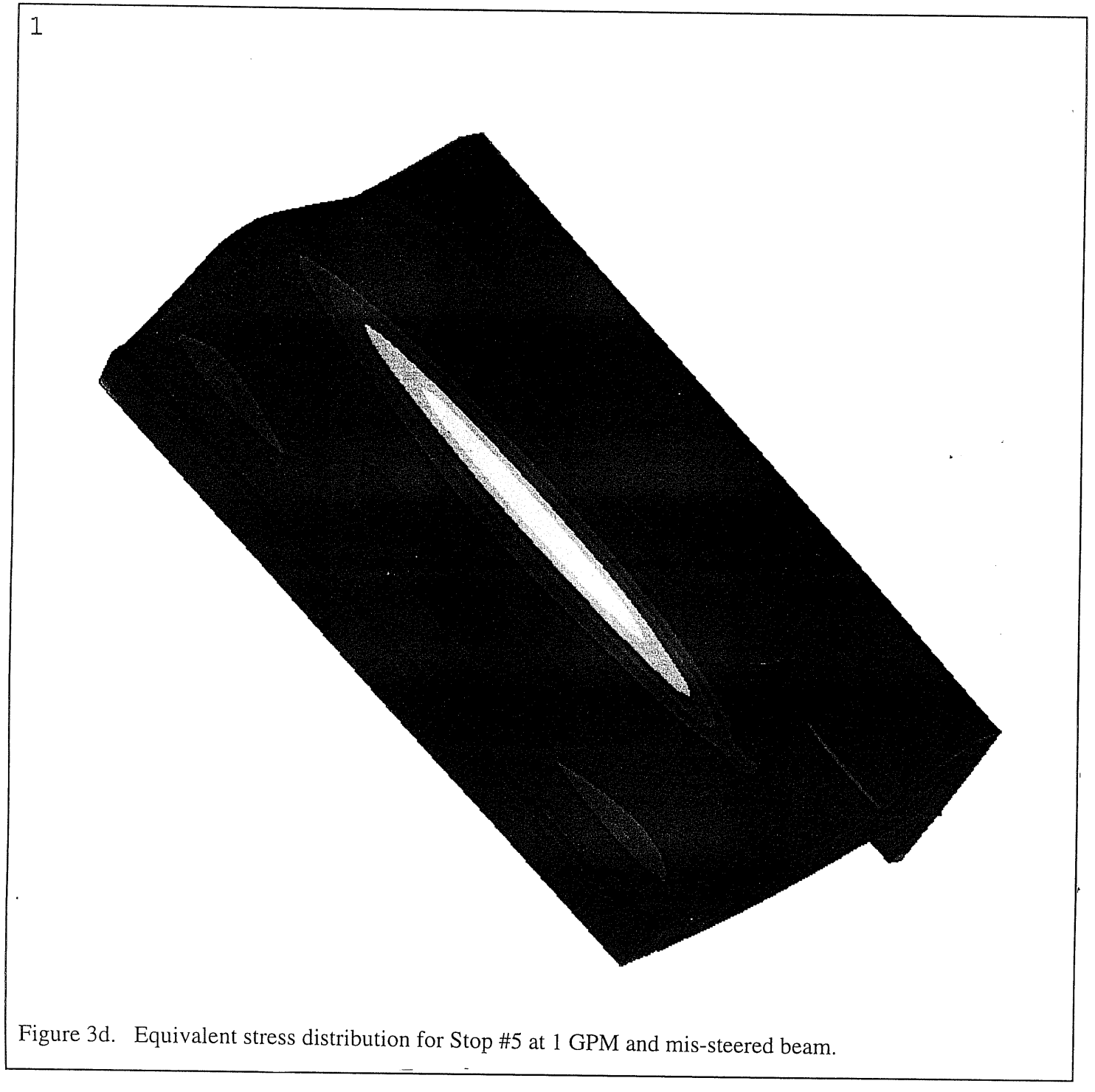

Figure 3d. Equivalent stress distribution for Stop #5 at 1 GPM and mis-steered beam.

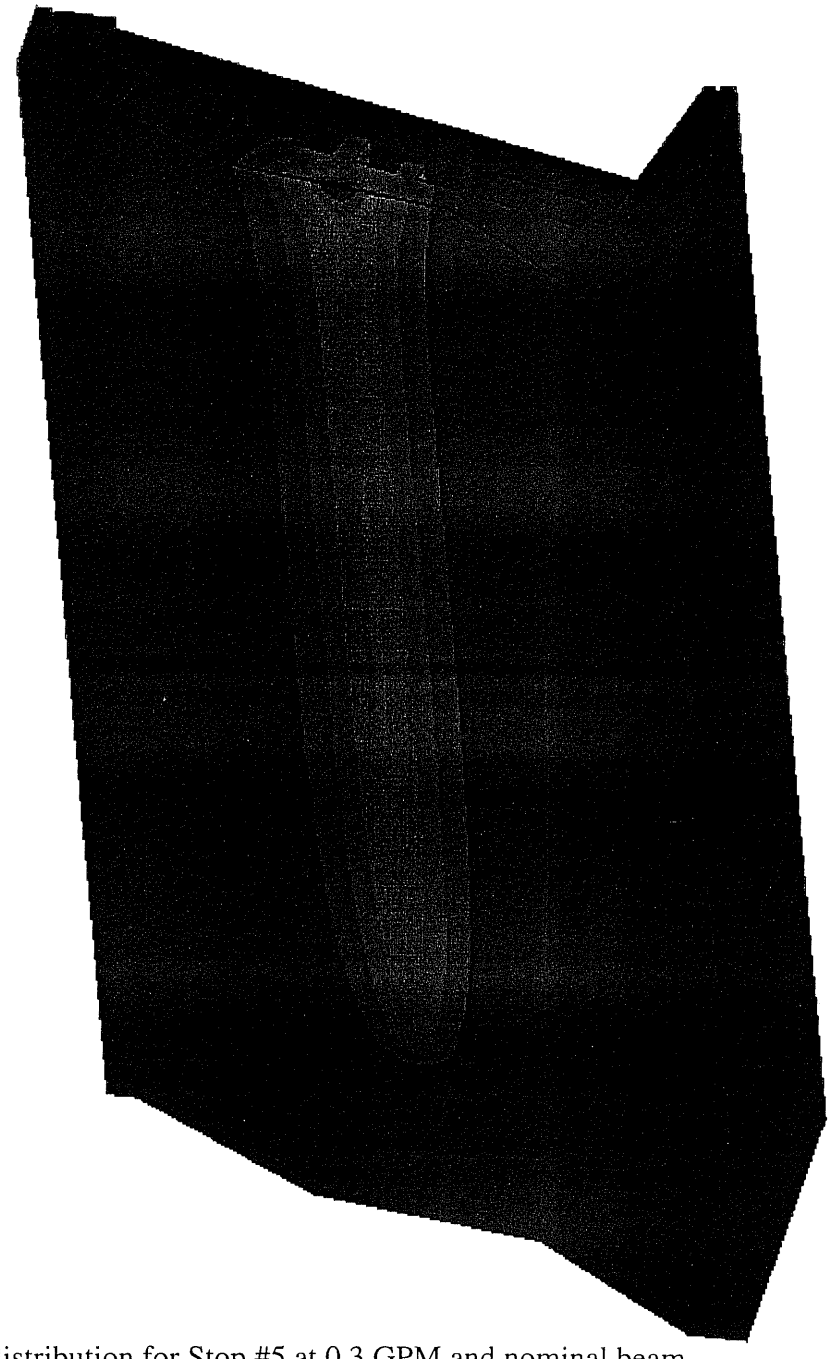

Figure 3e. Temperature distribution for Stop #5 at 0.3 GPM and nominal beam.

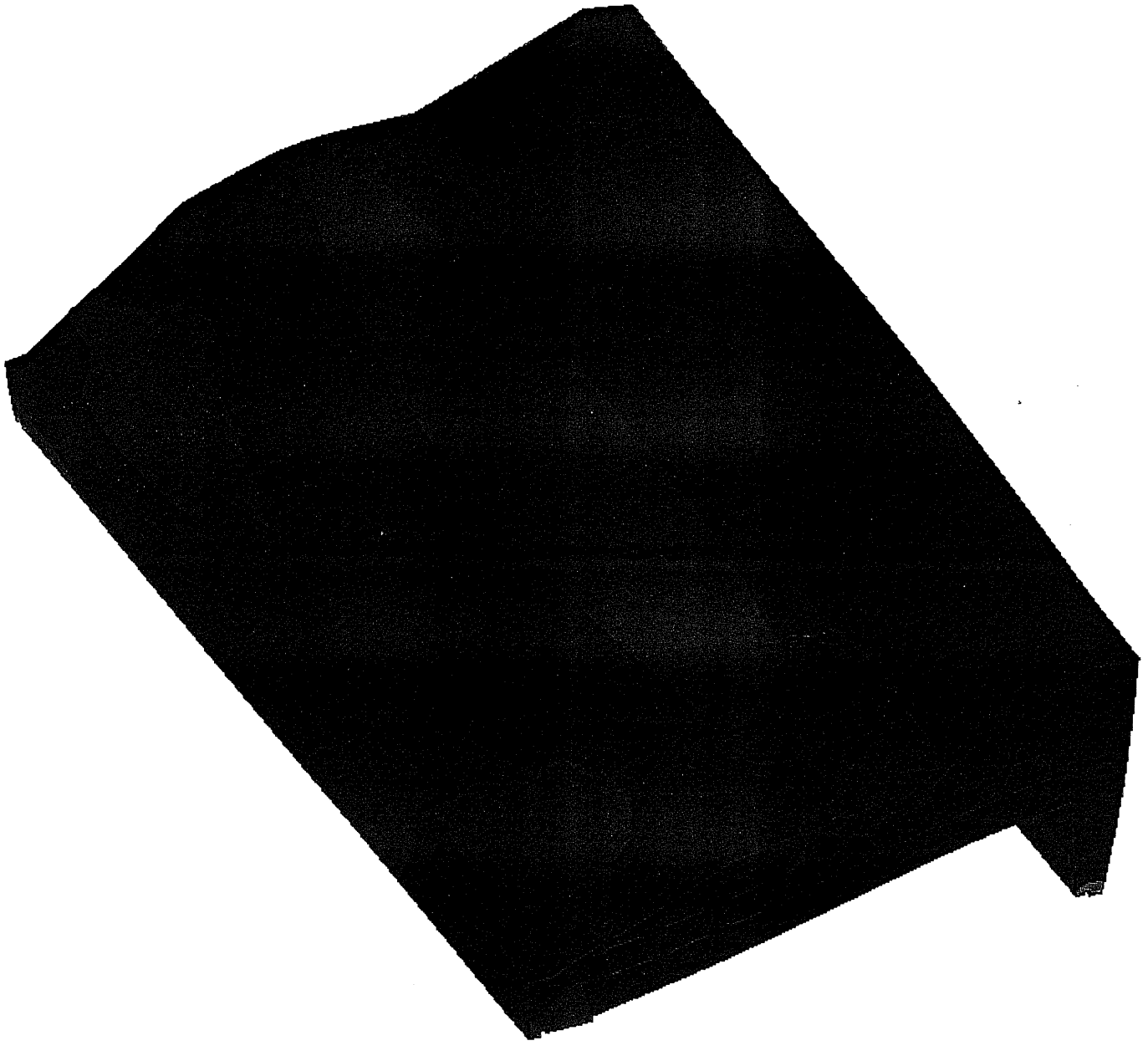

Figure 3f. Equivalent stress distribution for Stop #5 at 0.3 GPM and nominal beam.

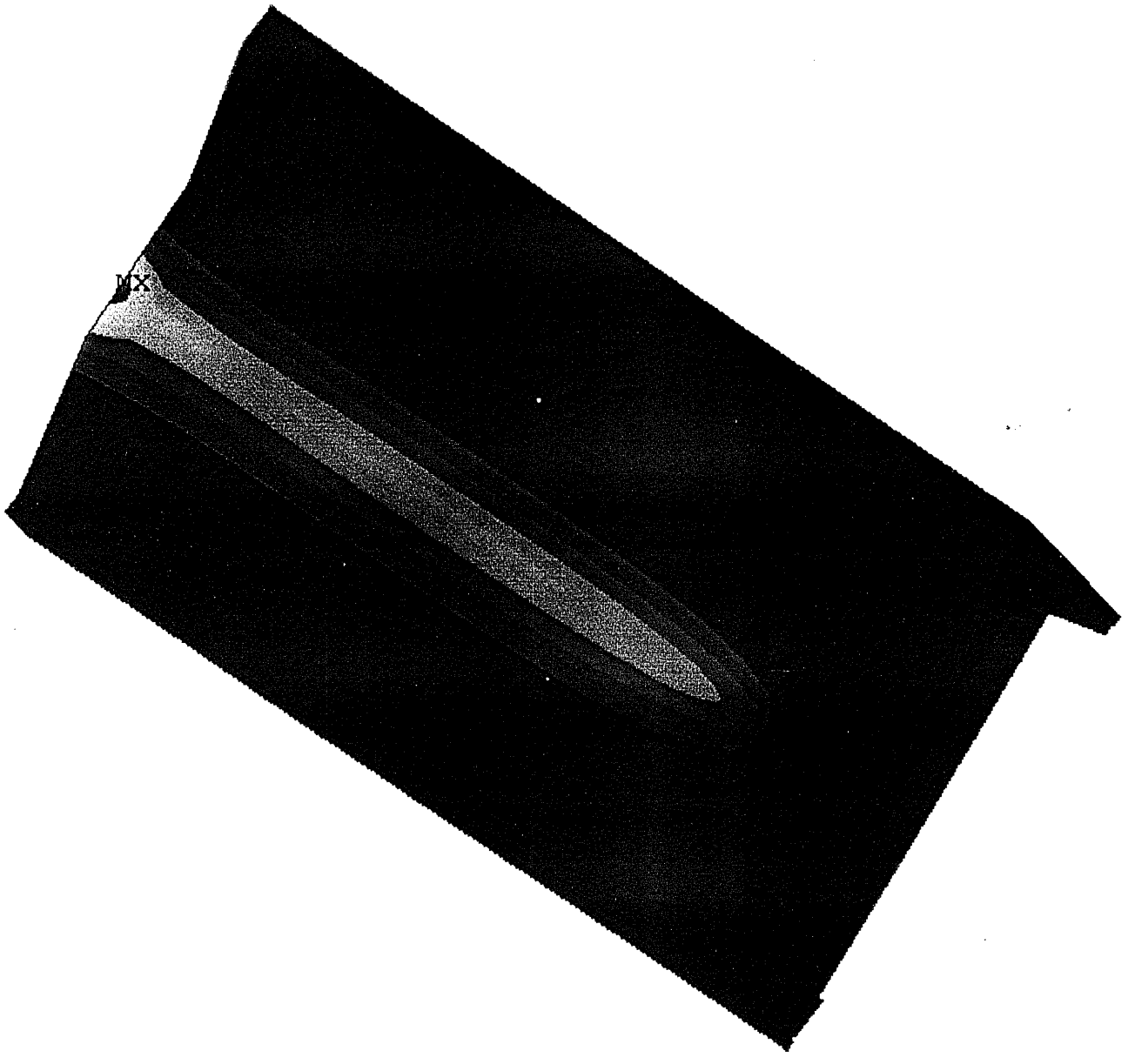

Figure 3g. Temperature distribution for Stop #5 at 0.3 GPM and mis-steered beam.

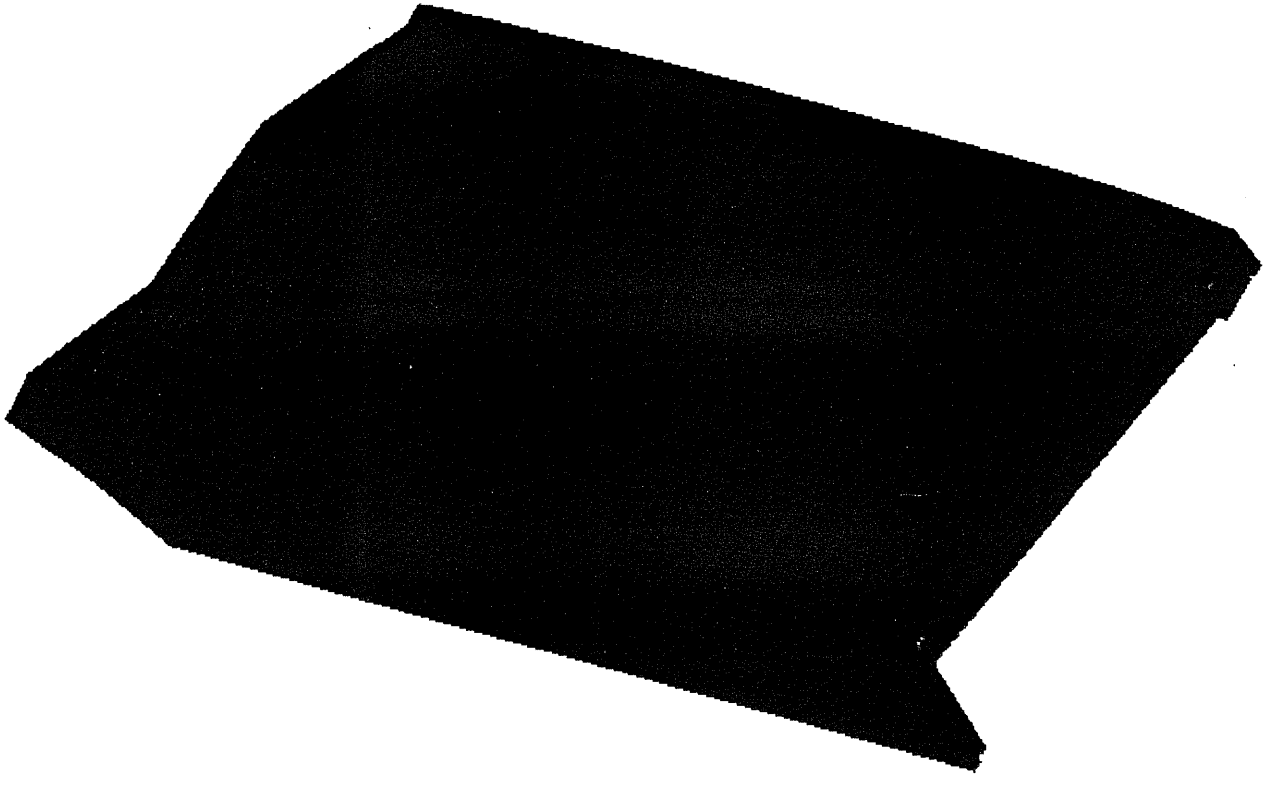

Figure 3h. Equivalent stress distribution for Stop #5 at 0.3 GPM and mis-steered beam.

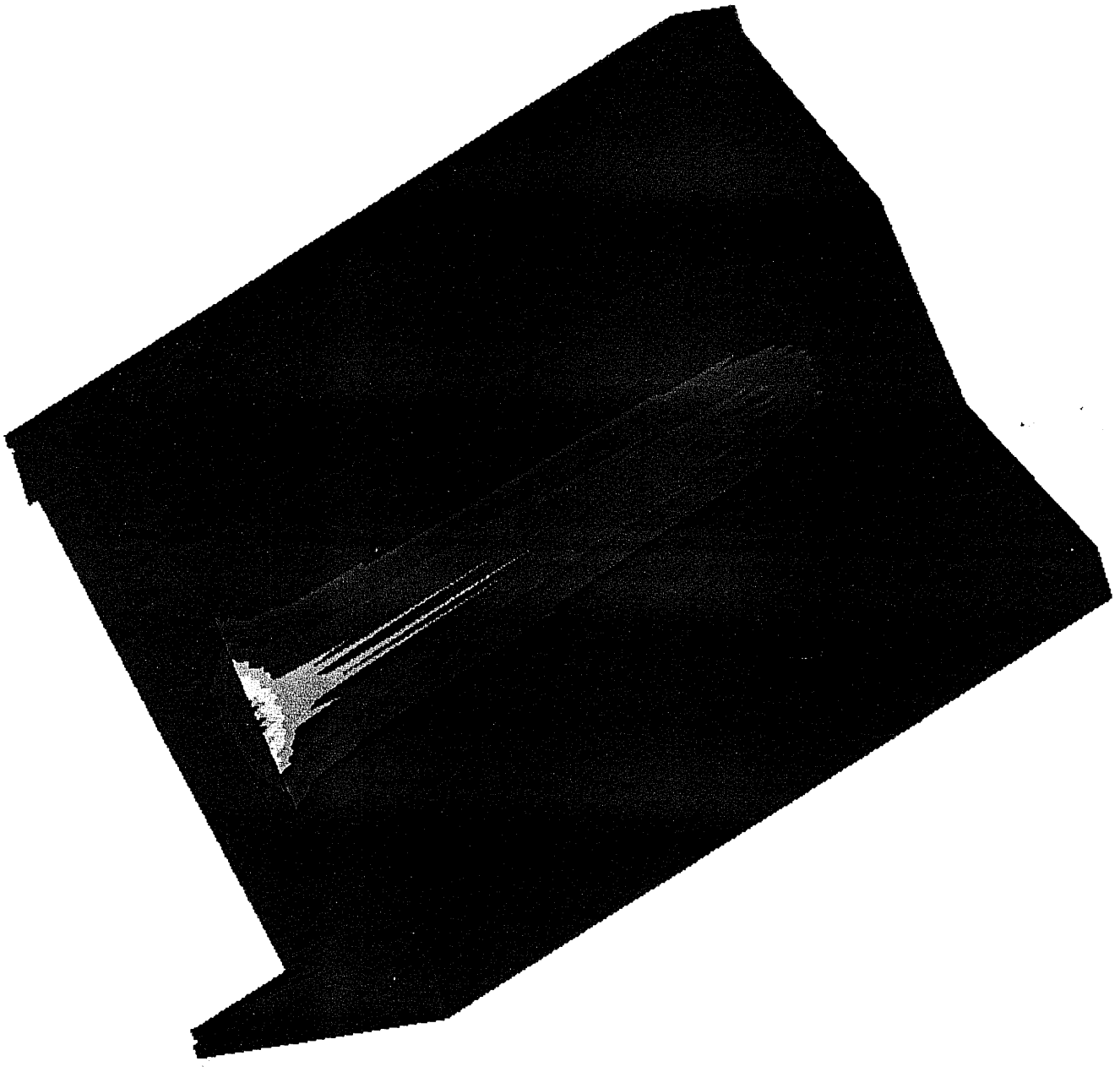

Figure 4a. Temperature distribution for Stop #6 at 1 GPM and nominal beam.

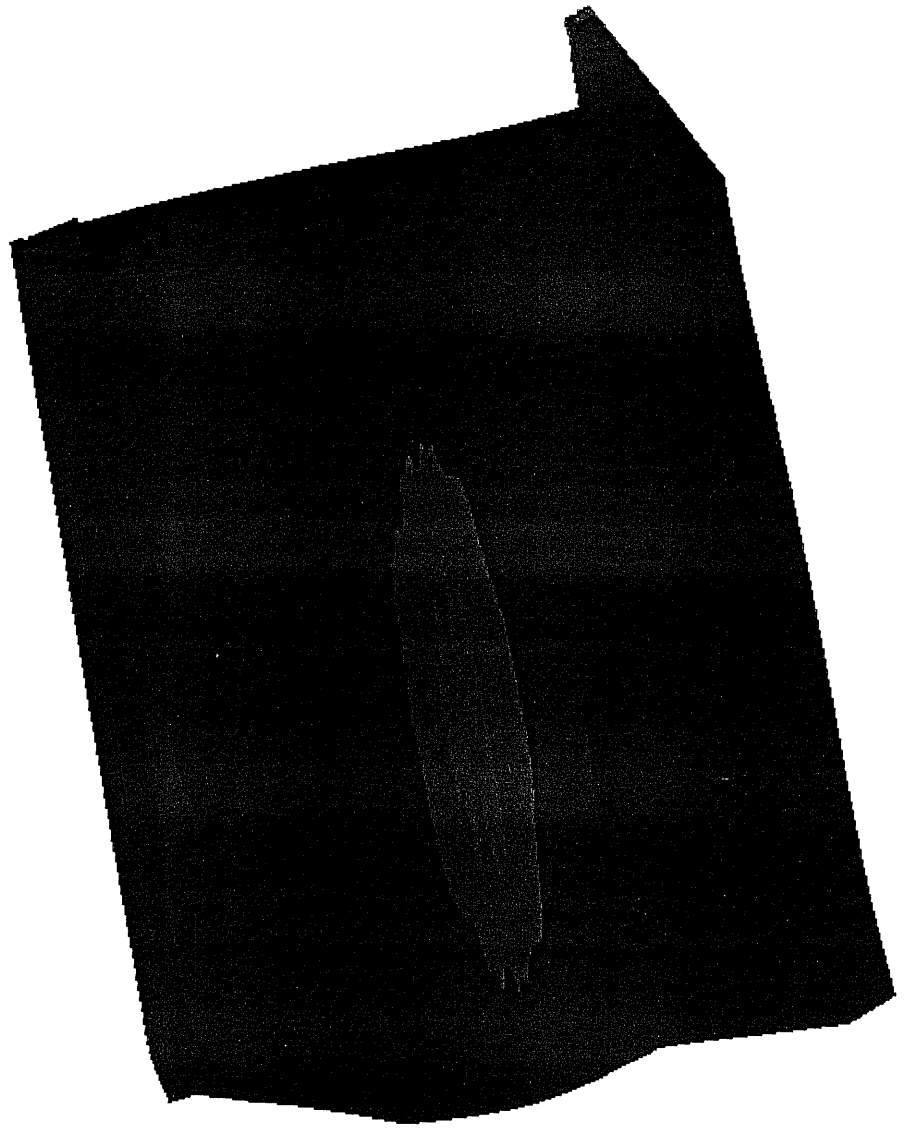

Figure 4b. Equivalent stress distribution for Stop #6 at 1 GPM and nominal beam.

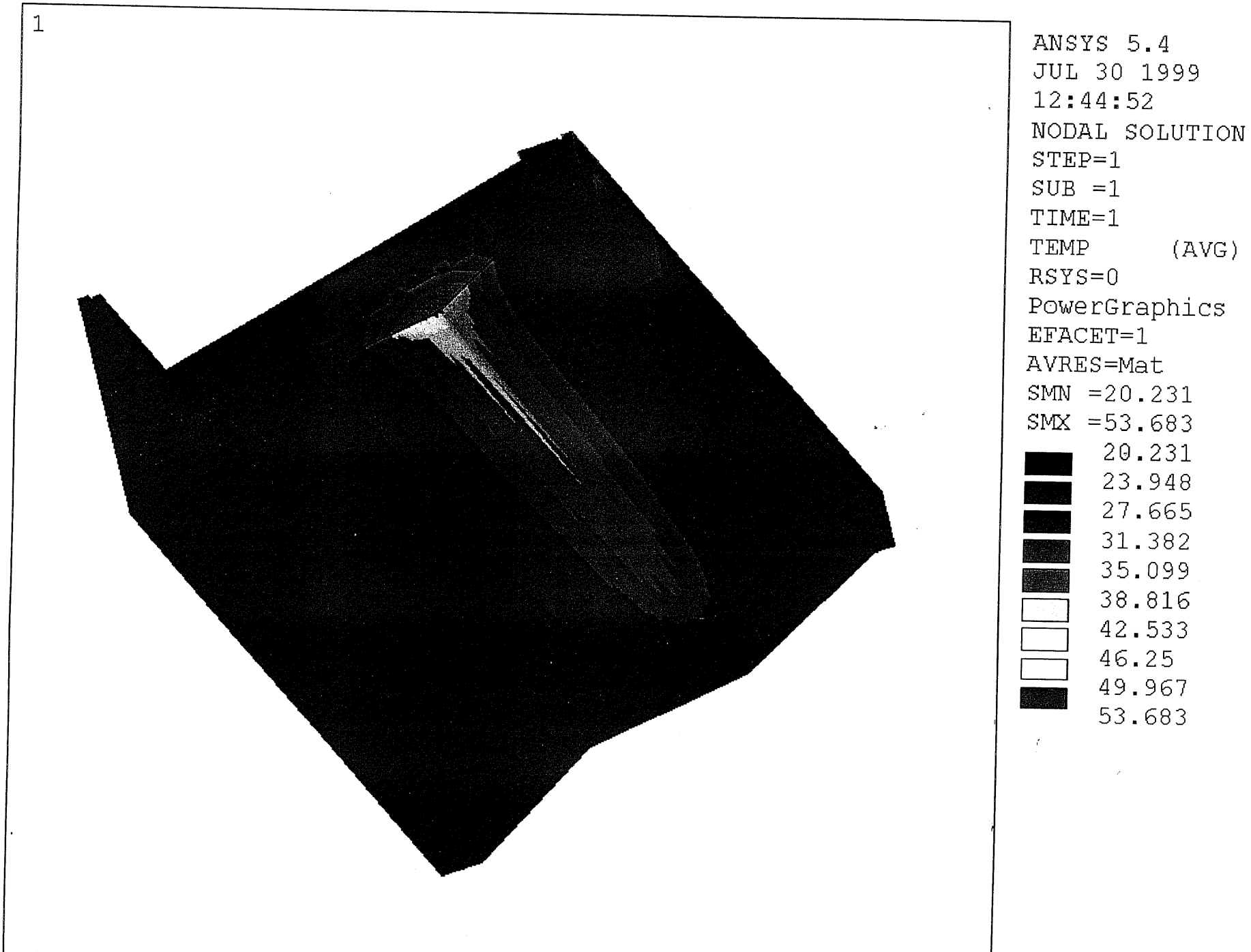

Figure 4c. Temperature distribution for Stop #6 at 1 GPM and mis-steered beam.

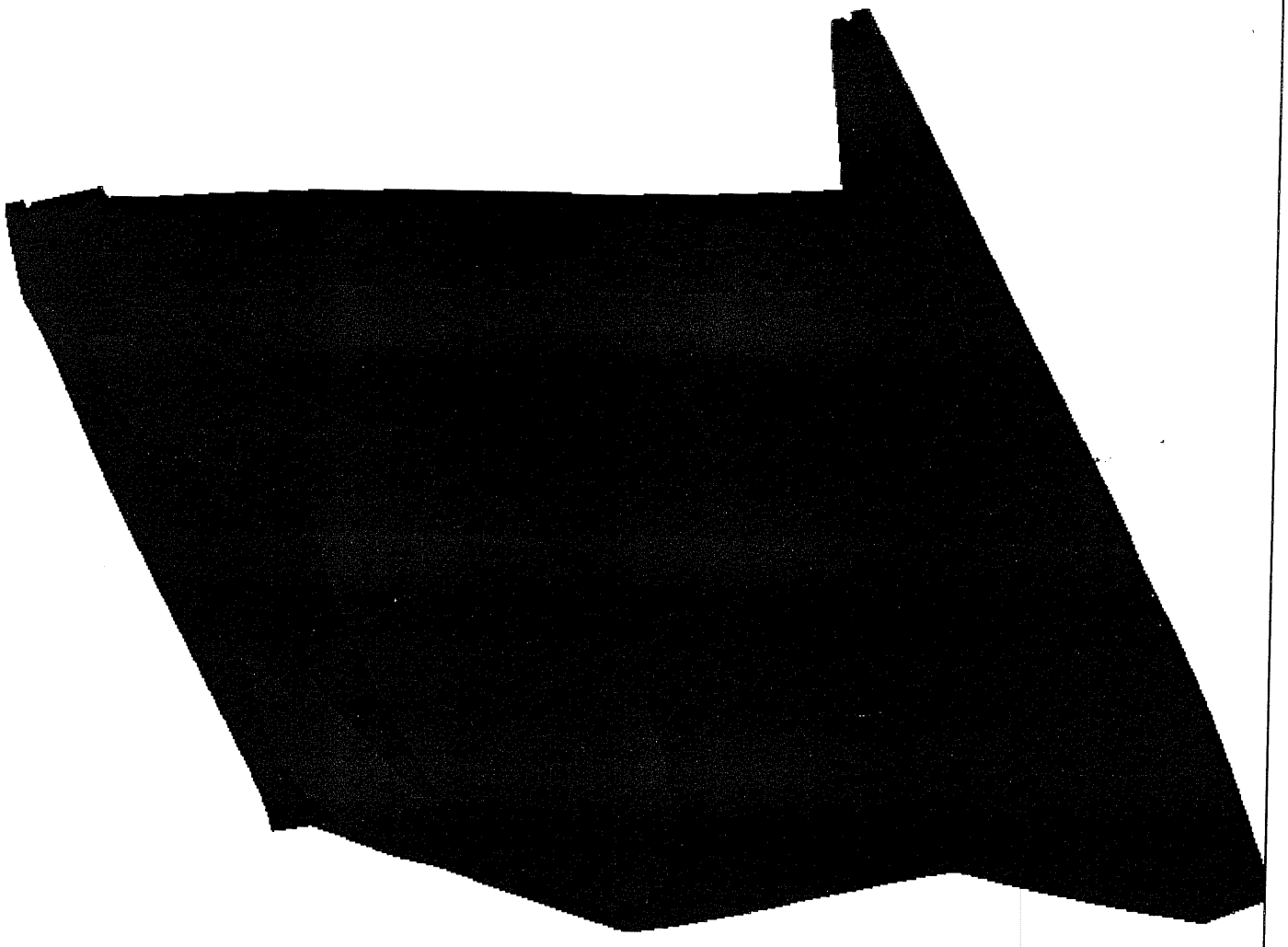

Figure 4d. Equivalent stress distribution for Stop #6 at 1 GPM and mis-steered beam.

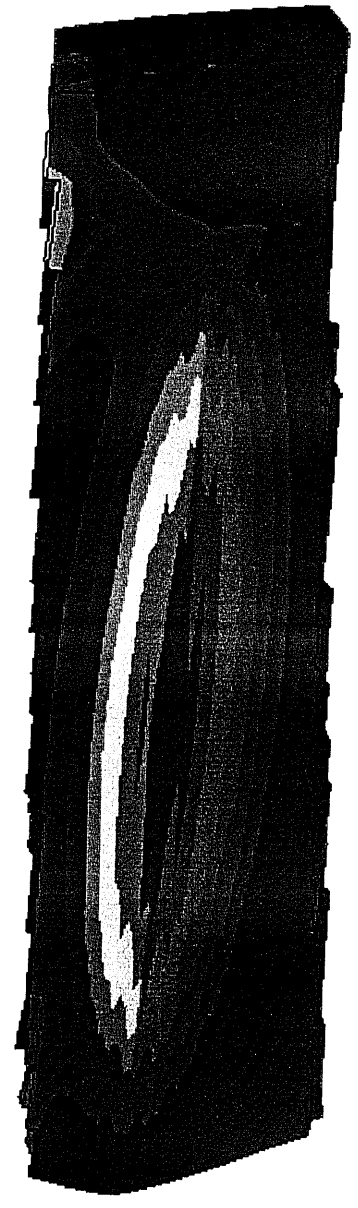

Figure 4d'. Stress distribution at heated surface for Stop #6 at 1 GPM and mis-steered beam.

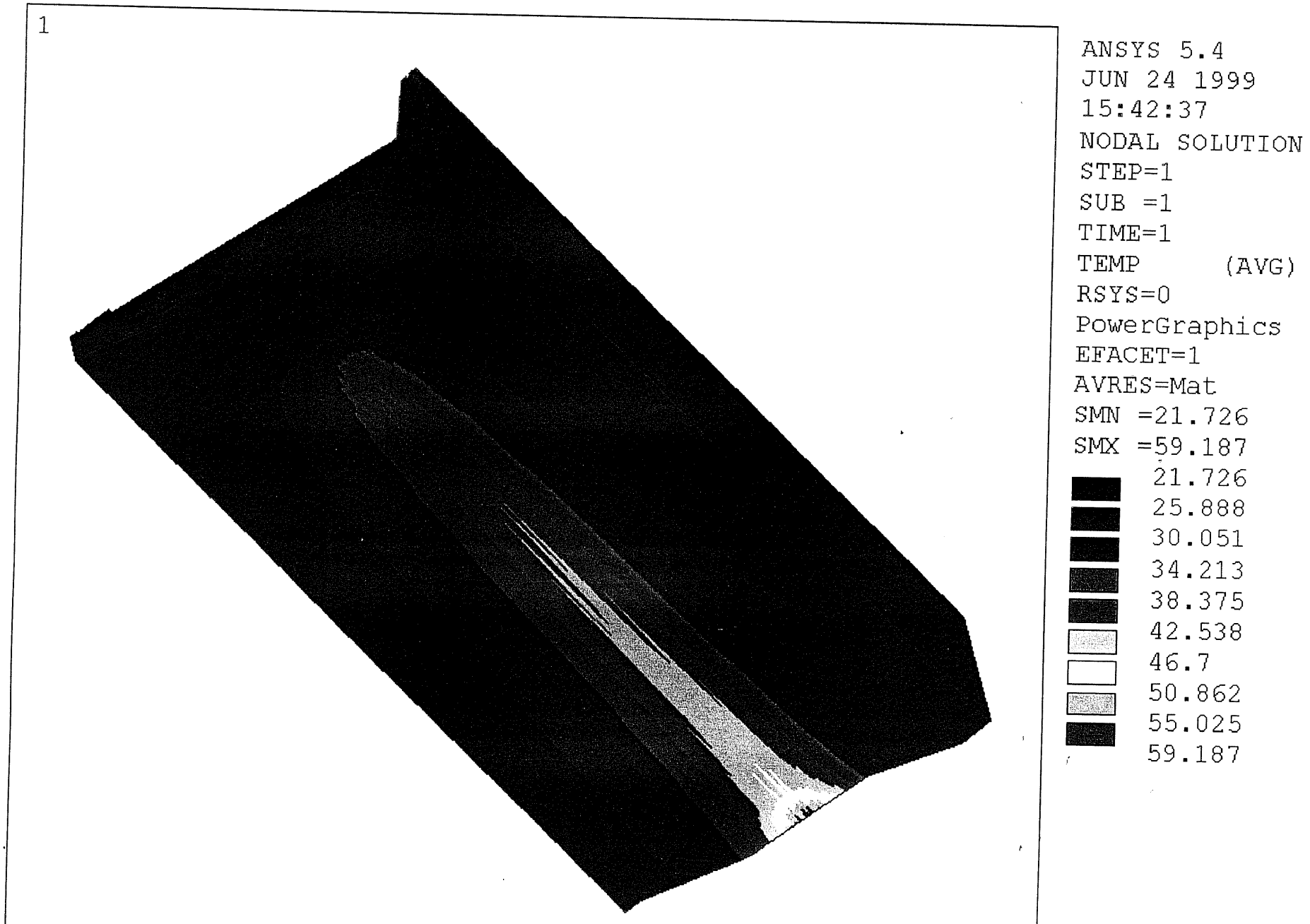

Figure 4e. Temperature distribution for Stop #6 at 0.3 GPM and nominal beam.

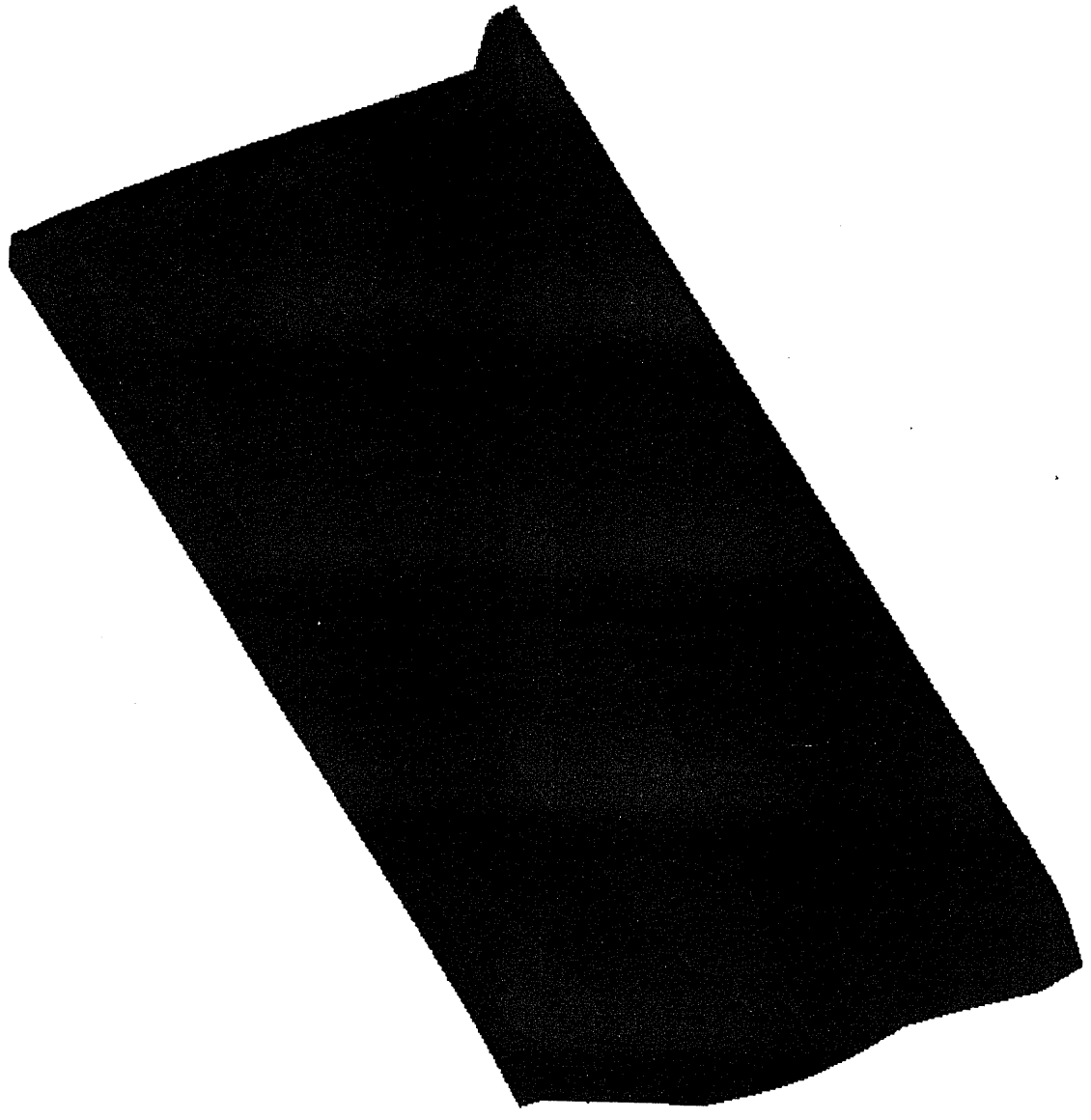

Figure 4f. Equivalent stress distribution for Stop #6 at 0.3 GPM and nominal beam.

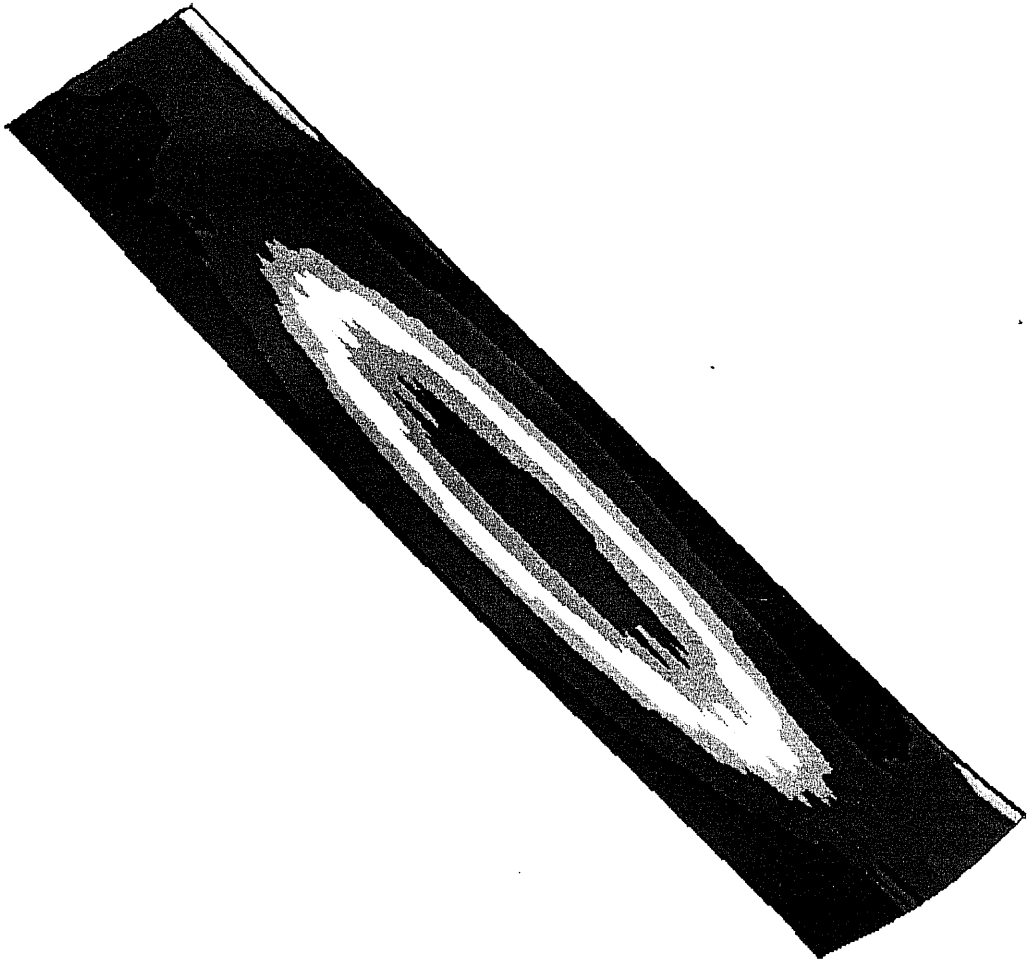

Figure 4f'. Stress distribution at heated surface for Stop #6 at 0.3 GPM and nominal beam.

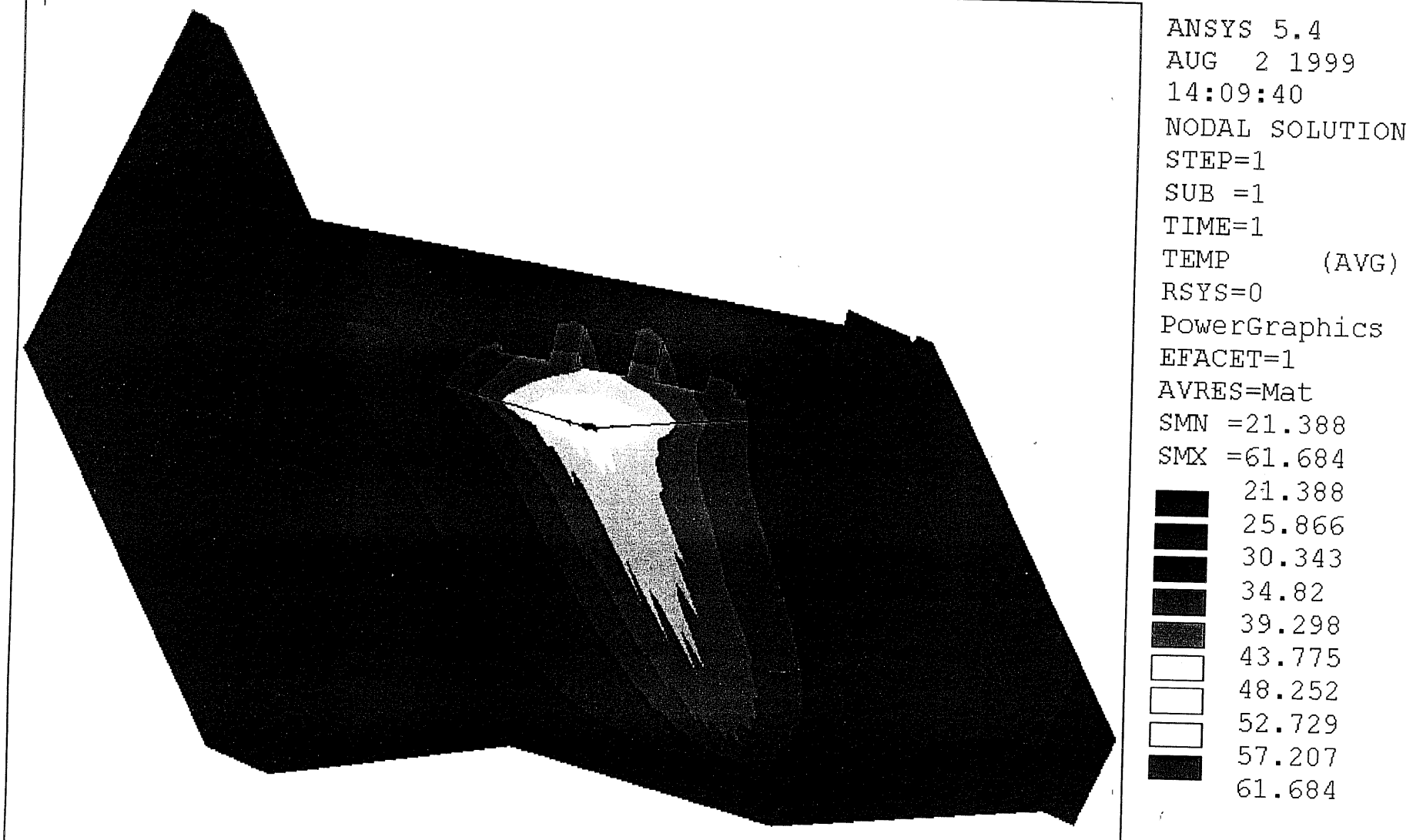

Figure 4g. Temperature distribution for Stop #6 at 0.3 GPM and mis-steered beam.

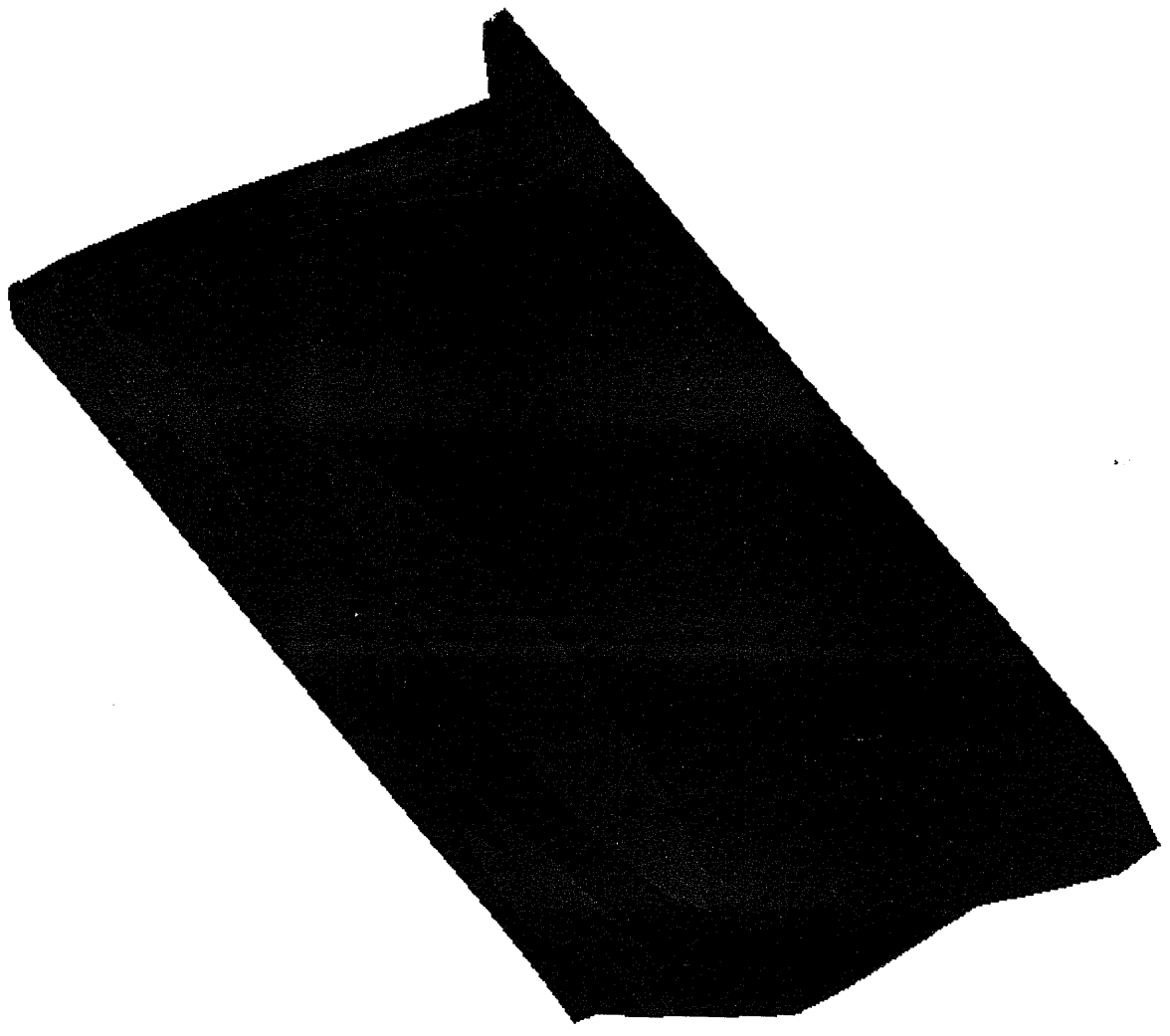

Figure 4h. Equivalent stress distribution for Stop #6 at 0.3 GPM and mis-steered beam.

1

Figure 5a. Temperature distribution for Blank-off flange at 1 GPM and nominal beam.

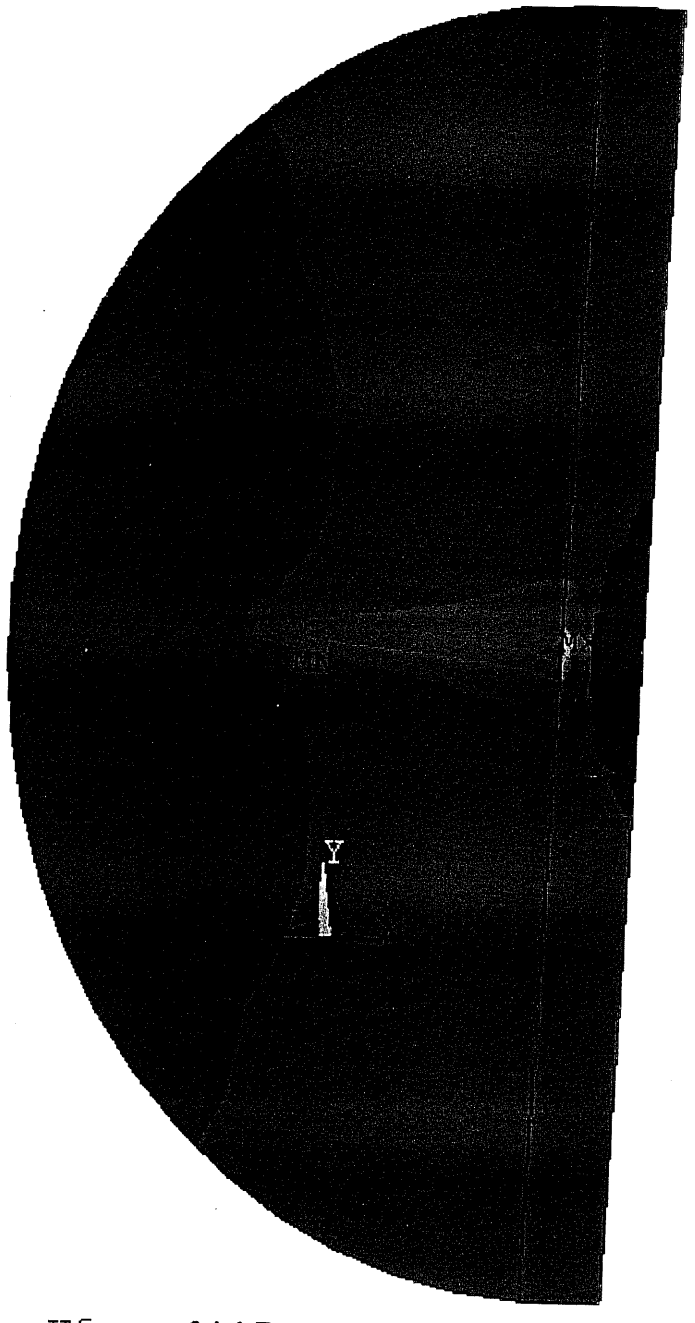

ANSYS 5.4
OCT 21 1999
10:59:19
NODAL SOLUTION
STEP=1
SUB =1
TIME=1
TEMP
TEPC=29.474
SMN =26.909
SMX =117.106

26.909
36.931
46.953
56.974
66.996
77.018
87.04
97.062
107.084
117.106

flanm3; P = 1165/2; Hf = .0117

p_k = 11.7 W/mm^2

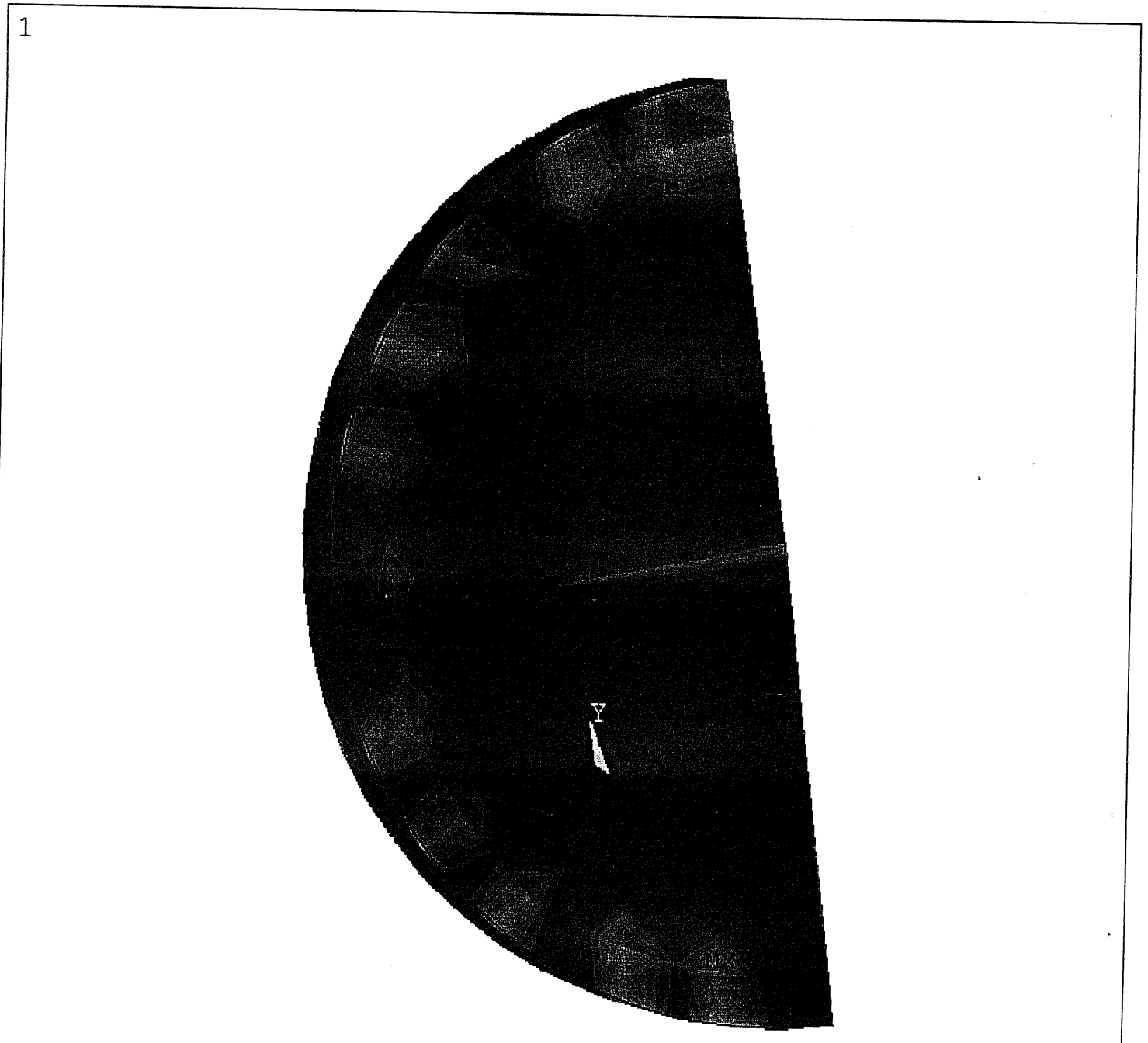

Figure 5b. Equivalent stress distribution for Blank-off flange at 1 GPM and nominal beam.

flm3rots.db; P = 1165/2, pk = 11.7 W/mm2, ut=uz=0

Table II. Photon Stop Superbend Analysis Results Summary

Component	Flow Condition (GPM)	Beam Position	ΔT (°C)	Max Stress (ksi)	Safety Factor
PS #5	1.0	Nominal	123	16.8	2.5
	1.0	± 1.2 mm*	127	20.9	2.0
	0.3	Nominal	143	21.2	2.0
	0.3	± 1.2 mm	149	24.9	1.7
PS #6	1.0	Nominal	31	3.3	3.0
	1.0	± 1.2 mm	33	4.8	2.1
	0.3	Nominal	38	5.1	2.0
	0.3	± 1.2 mm	40	6.7	1.5
Flange	1.0	Nominal	90	17.0	2.0

* Mis–steer condition

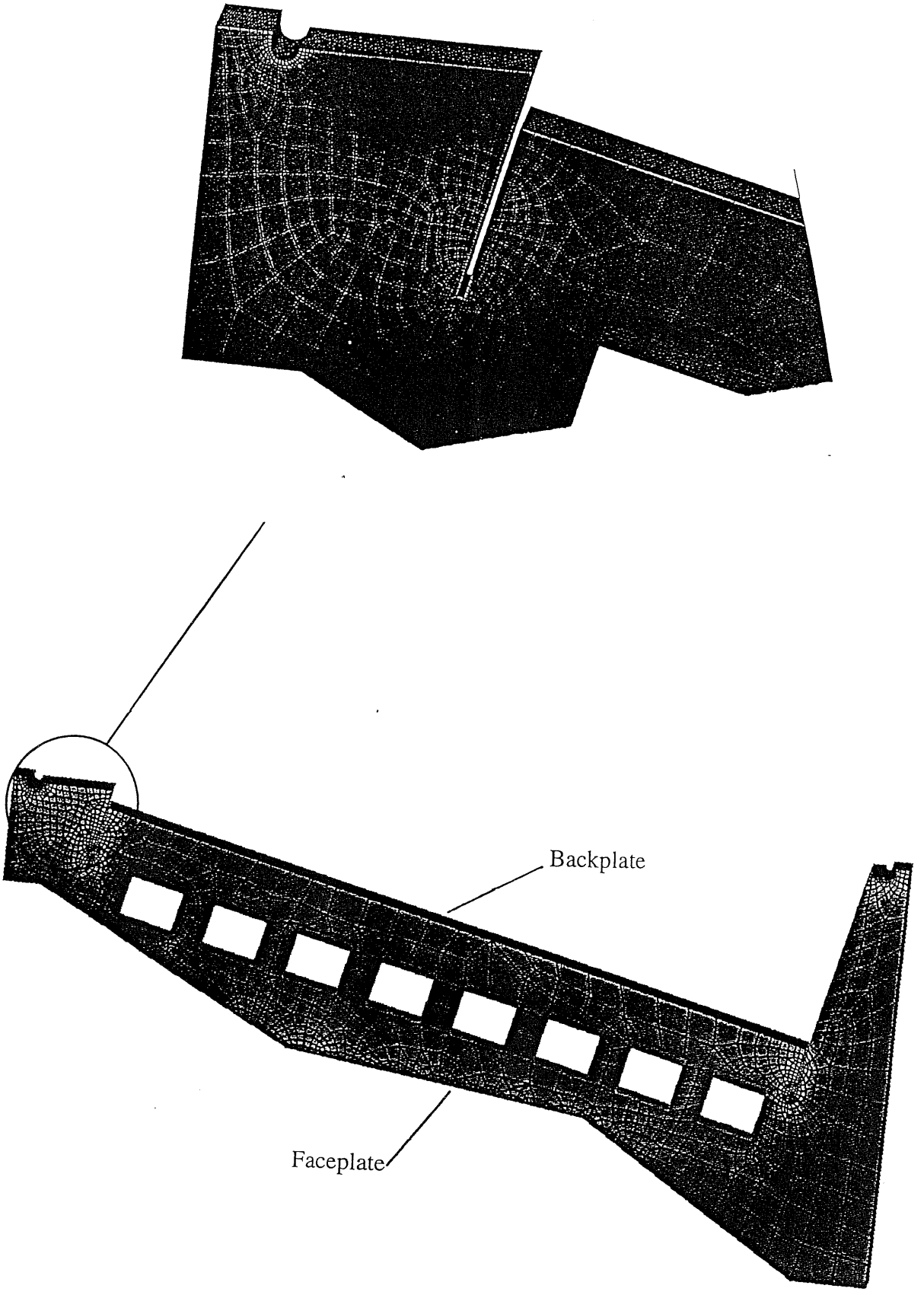

Figure 6. Model detail view showing geometric stress raiser.

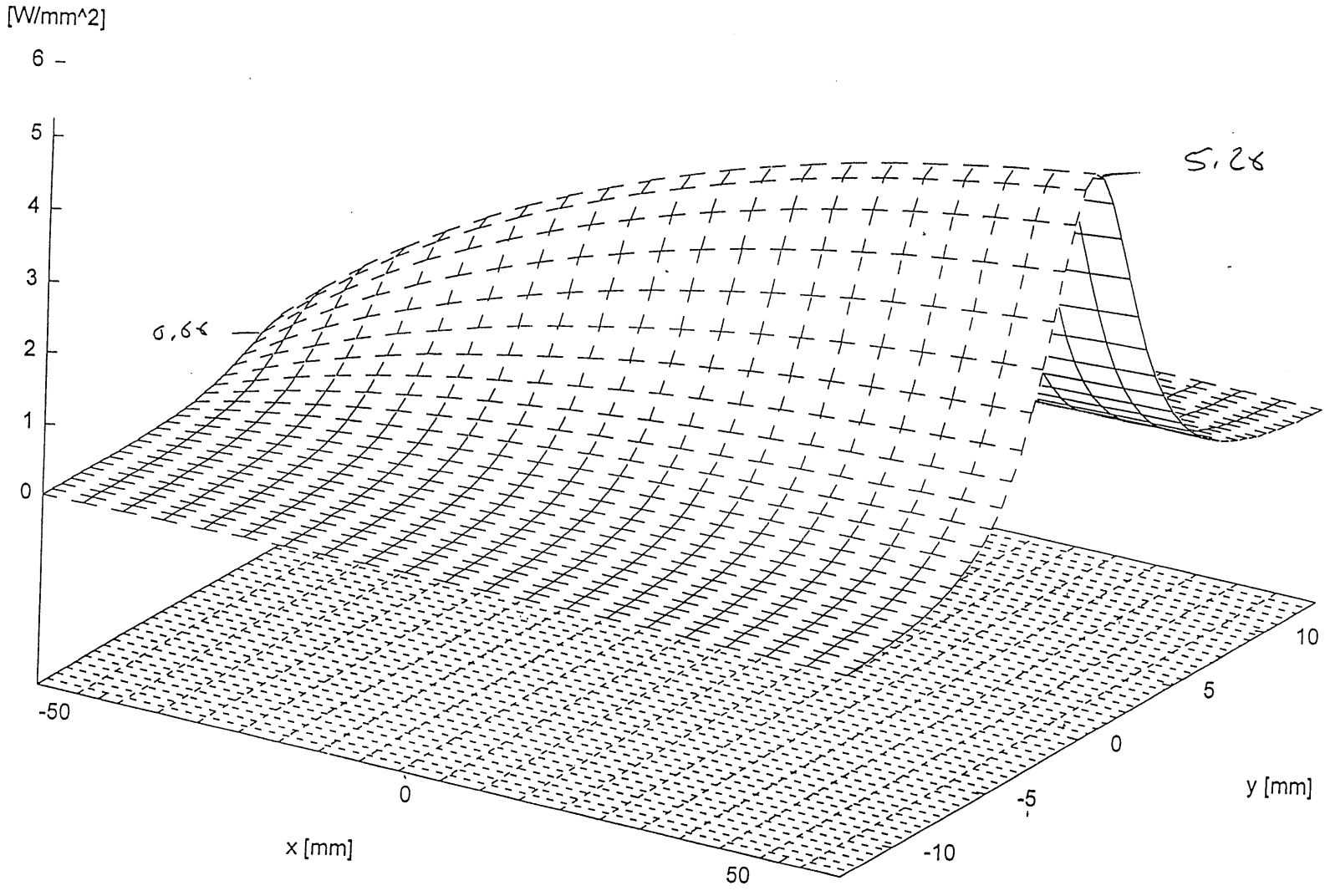
[W/mm^2]
6
5
4
3
2
1
0
5.2
0.6
-50
0
50
x [mm]
-10
-5
0
5
10
y [mm]

Photon : #5

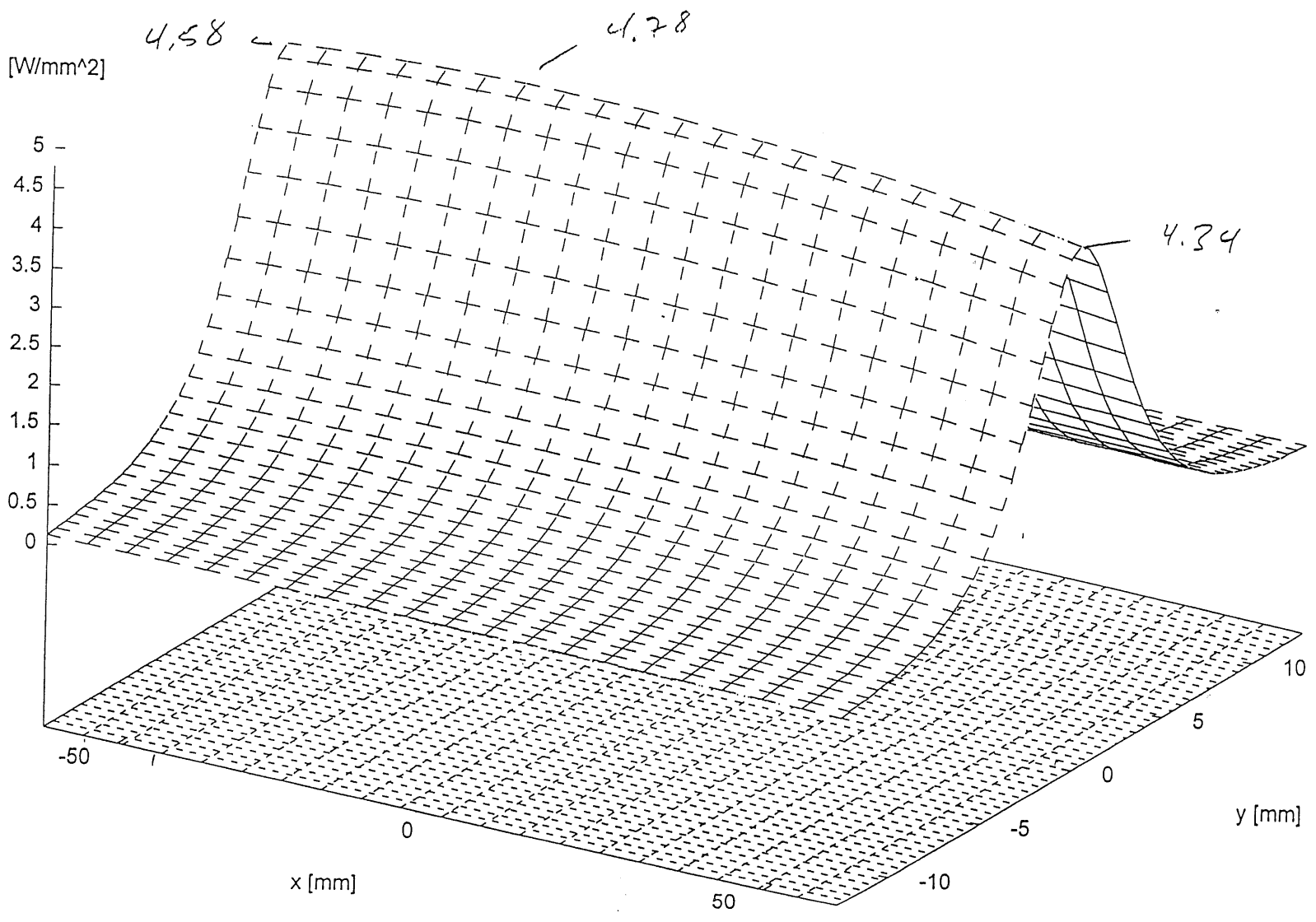

Subject: data for ps #5
Date: Tue, 13 Apr 1999 16:02:08 -0700
From: Steve Marks <s_marks@lbl.gov>
Organization: Lawrence Berkeley National Laboratory
To: Carol Corradi <CACorradi@lbl.gov>

```
# Ee = 1.9, I = 0.4
#   x(mm)      y(mm)      dP(W/mm^2)

 -61.450    -12.800     1.230e-01
 -55.305    -12.800     1.243e-01
 -49.160    -12.800     1.254e-01
 -43.015    -12.800     1.264e-01
 -36.870    -12.800     1.271e-01
 -30.725    -12.800     1.277e-01
 -24.580    -12.800     1.281e-01
 -18.435    -12.800     1.283e-01
 -12.290    -12.800     1.285e-01
  -6.145    -12.800     1.284e-01
   0.000    -12.800     1.282e-01
   6.145    -12.800     1.279e-01
  12.290    -12.800     1.274e-01
  18.435    -12.800     1.267e-01
  24.580    -12.800     1.259e-01
  30.725    -12.800     1.249e-01
  36.870    -12.800     1.237e-01
  43.015    -12.800     1.223e-01
  49.160    -12.800     1.206e-01
  55.305    -12.800     1.187e-01
  61.450    -12.800     1.166e-01

 -61.450    -12.288     1.376e-01
 -55.305    -12.288     1.391e-01
 -49.160    -12.288     1.403e-01
 -43.015    -12.288     1.413e-01
 -36.870    -12.288     1.422e-01
 -30.725    -12.288     1.428e-01
 -24.580    -12.288     1.433e-01
 -18.435    -12.288     1.435e-01
 -12.290    -12.288     1.437e-01
  -6.145    -12.288     1.436e-01
   0.000    -12.288     1.434e-01
   6.145    -12.288     1.430e-01
  12.290    -12.288     1.425e-01
  18.435    -12.288     1.417e-01
  24.580    -12.288     1.408e-01
  30.725    -12.288     1.397e-01
  36.870    -12.288     1.383e-01
  43.015    -12.288     1.367e-01
  49.160    -12.288     1.349e-01
  55.305    -12.288     1.328e-01
  61.450    -12.288     1.304e-01

 -61.450    -11.776     1.545e-01
 -55.305    -11.776     1.562e-01
 -49.160    -11.776     1.575e-01
 -43.015    -11.776     1.587e-01
 -36.870    -11.776     1.596e-01
 -30.725    -11.776     1.603e-01
 -24.580    -11.776     1.609e-01
 -18.435    -11.776     1.612e-01
 -12.290    -11.776     1.613e-01
  -6.145    -11.776     1.613e-01
```

-12.290	-8.704	3.554e-01
-6.145	-8.704	3.552e-01
0.000	-8.704	3.548e-01
6.145	-8.704	3.538e-01
12.290	-8.704	3.524e-01
18.435	-8.704	3.506e-01
24.580	-8.704	3.483e-01
30.725	-8.704	3.455e-01
36.870	-8.704	3.422e-01
43.015	-8.704	3.383e-01
49.160	-8.704	3.338e-01
55.305	-8.704	3.286e-01
61.450	-8.704	3.227e-01
-61.450	-8.192	3.955e-01
-55.305	-8.192	3.996e-01
-49.160	-8.192	4.032e-01
-43.015	-8.192	4.061e-01
-36.870	-8.192	4.085e-01
-30.725	-8.192	4.103e-01
-24.580	-8.192	4.116e-01
-18.435	-8.192	4.124e-01
-12.290	-8.192	4.128e-01
-6.145	-8.192	4.126e-01
0.000	-8.192	4.121e-01
6.145	-8.192	4.110e-01
12.290	-8.192	4.094e-01
18.435	-8.192	4.073e-01
24.580	-8.192	4.046e-01
30.725	-8.192	4.014e-01
36.870	-8.192	3.975e-01
43.015	-8.192	3.930e-01
49.160	-8.192	3.877e-01
55.305	-8.192	3.817e-01
61.450	-8.192	3.749e-01
-61.450	-7.680	4.621e-01
-55.305	-7.680	4.669e-01
-49.160	-7.680	4.711e-01
-43.015	-7.680	4.745e-01
-36.870	-7.680	4.772e-01
-30.725	-7.680	4.794e-01
-24.580	-7.680	4.810e-01
-18.435	-7.680	4.819e-01
-12.290	-7.680	4.823e-01
-6.145	-7.680	4.821e-01
0.000	-7.680	4.815e-01
6.145	-7.680	4.802e-01
12.290	-7.680	4.783e-01
18.435	-7.680	4.759e-01
24.580	-7.680	4.727e-01
30.725	-7.680	4.690e-01
36.870	-7.680	4.644e-01
43.015	-7.680	4.592e-01
49.160	-7.680	4.530e-01
55.305	-7.680	4.460e-01
61.450	-7.680	4.380e-01
-61.450	-7.168	5.431e-01
-55.305	-7.168	5.489e-01
-49.160	-7.168	5.537e-01
-43.015	-7.168	5.577e-01
-36.870	-7.168	5.610e-01
-30.725	-7.168	5.635e-01
-24.580	-7.168	5.653e-01

-18.435	-7.168	5.664e-01
-12.290	-7.168	5.669e-01
-6.145	-7.168	5.667e-01
0.000	-7.168	5.659e-01
6.145	-7.168	5.644e-01
12.290	-7.168	5.622e-01
18.435	-7.168	5.593e-01
24.580	-7.168	5.557e-01
30.725	-7.168	5.512e-01
36.870	-7.168	5.459e-01
43.015	-7.168	5.397e-01
49.160	-7.168	5.325e-01
55.305	-7.168	5.243e-01
61.450	-7.168	5.149e-01
-61.450	-6.656	6.423e-01
-55.305	-6.656	6.491e-01
-49.160	-6.656	6.548e-01
-43.015	-6.656	6.596e-01
-36.870	-6.656	6.634e-01
-30.725	-6.656	6.664e-01
-24.580	-6.656	6.686e-01
-18.435	-6.656	6.698e-01
-12.290	-6.656	6.704e-01
-6.145	-6.656	6.702e-01
0.000	-6.656	6.693e-01
6.145	-6.656	6.675e-01
12.290	-6.656	6.649e-01
18.435	-6.656	6.615e-01
24.580	-6.656	6.572e-01
30.725	-6.656	6.519e-01
36.870	-6.656	6.456e-01
43.015	-6.656	6.383e-01
49.160	-6.656	6.298e-01
55.305	-6.656	6.200e-01
61.450	-6.656	6.089e-01
-61.450	-6.144	7.642e-01
-55.305	-6.144	7.722e-01
-49.160	-6.144	7.790e-01
-43.015	-6.144	7.847e-01
-36.870	-6.144	7.893e-01
-30.725	-6.144	7.928e-01
-24.580	-6.144	7.954e-01
-18.435	-6.144	7.969e-01
-12.290	-6.144	7.976e-01
-6.145	-6.144	7.973e-01
0.000	-6.144	7.962e-01
6.145	-6.144	7.941e-01
12.290	-6.144	7.910e-01
18.435	-6.144	7.870e-01
24.580	-6.144	7.818e-01
30.725	-6.144	7.756e-01
36.870	-6.144	7.681e-01
43.015	-6.144	7.594e-01
49.160	-6.144	7.493e-01
55.305	-6.144	7.377e-01
61.450	-6.144	7.245e-01
-61.450	-5.632	9.144e-01
-55.305	-5.632	9.240e-01
-49.160	-5.632	9.321e-01
-43.015	-5.632	9.389e-01
-36.870	-5.632	9.444e-01
-30.725	-5.632	9.486e-01

-36.870	-2.560	2.885e+00
-30.725	-2.560	2.898e+00
-24.580	-2.560	2.907e+00
-18.435	-2.560	2.913e+00
-12.290	-2.560	2.916e+00
-6.145	-2.560	2.914e+00
0.000	-2.560	2.911e+00
6.145	-2.560	2.903e+00
12.290	-2.560	2.892e+00
18.435	-2.560	2.877e+00
24.580	-2.560	2.858e+00
30.725	-2.560	2.835e+00
36.870	-2.560	2.808e+00
43.015	-2.560	2.776e+00
49.160	-2.560	2.740e+00
55.305	-2.560	2.697e+00
61.450	-2.560	2.649e+00
-61.450	-2.048	3.282e+00
-55.305	-2.048	3.316e+00
-49.160	-2.048	3.345e+00
-43.015	-2.048	3.370e+00
-36.870	-2.048	3.389e+00
-30.725	-2.048	3.404e+00
-24.580	-2.048	3.415e+00
-18.435	-2.048	3.422e+00
-12.290	-2.048	3.425e+00
-6.145	-2.048	3.423e+00
0.000	-2.048	3.419e+00
6.145	-2.048	3.410e+00
12.290	-2.048	3.397e+00
18.435	-2.048	3.379e+00
24.580	-2.048	3.357e+00
30.725	-2.048	3.331e+00
36.870	-2.048	3.299e+00
43.015	-2.048	3.261e+00
49.160	-2.048	3.218e+00
55.305	-2.048	3.169e+00
61.450	-2.048	3.112e+00
-61.450	-1.536	3.766e+00
-55.305	-1.536	3.805e+00
-49.160	-1.536	3.838e+00
-43.015	-1.536	3.866e+00
-36.870	-1.536	3.889e+00
-30.725	-1.536	3.906e+00
-24.580	-1.536	3.919e+00
-18.435	-1.536	3.926e+00
-12.290	-1.536	3.930e+00
-6.145	-1.536	3.928e+00
0.000	-1.536	3.923e+00
6.145	-1.536	3.912e+00
12.290	-1.536	3.897e+00
18.435	-1.536	3.877e+00
24.580	-1.536	3.852e+00
30.725	-1.536	3.821e+00
36.870	-1.536	3.785e+00
43.015	-1.536	3.742e+00
49.160	-1.536	3.693e+00
55.305	-1.536	3.636e+00
61.450	-1.536	3.571e+00
-61.450	-1.024	4.186e+00
-55.305	-1.024	4.230e+00
-49.160	-1.024	4.267e+00

-43.015	-1.024	4.298e+00
-36.870	-1.024	4.323e+00
-30.725	-1.024	4.342e+00
-24.580	-1.024	4.356e+00
-18.435	-1.024	4.365e+00
-12.290	-1.024	4.369e+00
-6.145	-1.024	4.367e+00
0.000	-1.024	4.361e+00
6.145	-1.024	4.349e+00
12.290	-1.024	4.333e+00
18.435	-1.024	4.310e+00
24.580	-1.024	4.282e+00
30.725	-1.024	4.248e+00
36.870	-1.024	4.208e+00
43.015	-1.024	4.160e+00
49.160	-1.024	4.105e+00
55.305	-1.024	4.042e+00
61.450	-1.024	3.970e+00
-61.450	-0.512	4.476e+00
-55.305	-0.512	4.523e+00
-49.160	-0.512	4.562e+00
-43.015	-0.512	4.595e+00
-36.870	-0.512	4.622e+00
-30.725	-0.512	4.642e+00
-24.580	-0.512	4.658e+00
-18.435	-0.512	4.666e+00
-12.290	-0.512	4.671e+00
-6.145	-0.512	4.669e+00
0.000	-0.512	4.663e+00
6.145	-0.512	4.650e+00
12.290	-0.512	4.632e+00
18.435	-0.512	4.608e+00
24.580	-0.512	4.579e+00
30.725	-0.512	4.542e+00
36.870	-0.512	4.499e+00
43.015	-0.512	4.448e+00
49.160	-0.512	4.389e+00
55.305	-0.512	4.322e+00
61.450	-0.512	4.245e+00
-61.450	0.000	4.578e+00
-55.305	0.000	4.626e+00
-49.160	0.000	4.667e+00
-43.015	0.000	4.700e+00
-36.870	0.000	4.727e+00
-30.725	0.000	4.749e+00
-24.580	0.000	4.764e+00
-18.435	0.000	4.773e+00
-12.290	0.000	4.777e+00
-6.145	0.000	4.775e+00
0.000	0.000	4.769e+00
6.145	0.000	4.757e+00
12.290	0.000	4.738e+00
18.435	0.000	4.714e+00
24.580	0.000	4.683e+00
30.725	0.000	4.646e+00
36.870	0.000	4.602e+00
43.015	0.000	4.550e+00
49.160	0.000	4.490e+00
55.305	0.000	4.421e+00
61.450	0.000	4.342e+00
-61.450	0.512	4.472e+00
-55.305	0.512	4.519e+00

-61.450	3.584	1.940e+00
-55.305	3.584	1.960e+00
-49.160	3.584	1.977e+00
-43.015	3.584	1.991e+00
-36.870	3.584	2.003e+00
-30.725	3.584	2.012e+00
-24.580	3.584	2.018e+00
-18.435	3.584	2.022e+00
-12.290	3.584	2.024e+00
-6.145	3.584	2.023e+00
0.000	3.584	2.020e+00
6.145	3.584	2.015e+00
12.290	3.584	2.007e+00
18.435	3.584	1.997e+00
24.580	3.584	1.984e+00
30.725	3.584	1.968e+00
36.870	3.584	1.950e+00
43.015	3.584	1.928e+00
49.160	3.584	1.902e+00
55.305	3.584	1.873e+00
61.450	3.584	1.840e+00

-61.450	4.096	1.604e+00
-55.305	4.096	1.621e+00
-49.160	4.096	1.635e+00
-43.015	4.096	1.647e+00
-36.870	4.096	1.656e+00
-30.725	4.096	1.664e+00
-24.580	4.096	1.669e+00
-18.435	4.096	1.672e+00
-12.290	4.096	1.674e+00
-6.145	4.096	1.673e+00
0.000	4.096	1.671e+00
6.145	4.096	1.667e+00
12.290	4.096	1.660e+00
18.435	4.096	1.652e+00
24.580	4.096	1.641e+00
30.725	4.096	1.628e+00
36.870	4.096	1.612e+00
43.015	4.096	1.594e+00
49.160	4.096	1.573e+00
55.305	4.096	1.549e+00
61.450	4.096	1.522e+00

-61.450	4.608	1.327e+00
-55.305	4.608	1.340e+00
-49.160	4.608	1.352e+00
-43.015	4.608	1.362e+00
-36.870	4.608	1.370e+00
-30.725	4.608	1.376e+00
-24.580	4.608	1.380e+00
-18.435	4.608	1.383e+00
-12.290	4.608	1.384e+00
-6.145	4.608	1.383e+00
0.000	4.608	1.382e+00
6.145	4.608	1.378e+00
12.290	4.608	1.373e+00
18.435	4.608	1.366e+00
24.580	4.608	1.357e+00
30.725	4.608	1.346e+00
36.870	4.608	1.333e+00
43.015	4.608	1.318e+00
49.160	4.608	1.301e+00
55.305	4.608	1.281e+00
61.450	4.608	1.259e+00

-61.450	5.120	1.099e+00
-55.305	5.120	1.111e+00
-49.160	5.120	1.121e+00
-43.015	5.120	1.129e+00
-36.870	5.120	1.135e+00
-30.725	5.120	1.140e+00
-24.580	5.120	1.144e+00
-18.435	5.120	1.146e+00
-12.290	5.120	1.147e+00
-6.145	5.120	1.146e+00
0.000	5.120	1.145e+00
6.145	5.120	1.142e+00
12.290	5.120	1.138e+00
18.435	5.120	1.132e+00
24.580	5.120	1.124e+00
30.725	5.120	1.116e+00
36.870	5.120	1.105e+00
43.015	5.120	1.093e+00
49.160	5.120	1.078e+00
55.305	5.120	1.062e+00
61.450	5.120	1.043e+00

-61.450	5.632	9.148e-01
-55.305	5.632	9.243e-01
-49.160	5.632	9.324e-01
-43.015	5.632	9.391e-01
-36.870	5.632	9.445e-01
-30.725	5.632	9.487e-01
-24.580	5.632	9.517e-01
-18.435	5.632	9.535e-01
-12.290	5.632	9.544e-01
-6.145	5.632	9.540e-01
0.000	5.632	9.527e-01
6.145	5.632	9.502e-01
12.290	5.632	9.466e-01
18.435	5.632	9.418e-01
24.580	5.632	9.357e-01
30.725	5.632	9.283e-01
36.870	5.632	9.195e-01
43.015	5.632	9.092e-01
49.160	5.632	8.972e-01
55.305	5.632	8.836e-01
61.450	5.632	8.680e-01

-61.450	6.144	7.651e-01
-55.305	6.144	7.731e-01
-49.160	6.144	7.798e-01
-43.015	6.144	7.854e-01
-36.870	6.144	7.899e-01
-30.725	6.144	7.934e-01
-24.580	6.144	7.960e-01
-18.435	6.144	7.975e-01
-12.290	6.144	7.982e-01
-6.145	6.144	7.978e-01
0.000	6.144	7.968e-01
6.145	6.144	7.947e-01
12.290	6.144	7.917e-01
18.435	6.144	7.876e-01
24.580	6.144	7.825e-01
30.725	6.144	7.764e-01
36.870	6.144	7.690e-01
43.015	6.144	7.604e-01
49.160	6.144	7.504e-01
55.305	6.144	7.390e-01

49.160	9.216	2.907e-01
55.305	9.216	2.863e-01
61.450	9.216	2.813e-01
-61.450	9.728	2.581e-01
-55.305	9.728	2.608e-01
-49.160	9.728	2.631e-01
-43.015	9.728	2.649e-01
-36.870	9.728	2.665e-01
-30.725	9.728	2.676e-01
-24.580	9.728	2.685e-01
-18.435	9.728	2.690e-01
-12.290	9.728	2.692e-01
-6.145	9.728	2.691e-01
0.000	9.728	2.688e-01
6.145	9.728	2.681e-01
12.290	9.728	2.671e-01
18.435	9.728	2.657e-01
24.580	9.728	2.640e-01
30.725	9.728	2.619e-01
36.870	9.728	2.594e-01
43.015	9.728	2.565e-01
49.160	9.728	2.532e-01
55.305	9.728	2.494e-01
61.450	9.728	2.450e-01
-61.450	10.240	2.260e-01
-55.305	10.240	2.283e-01
-49.160	10.240	2.303e-01
-43.015	10.240	2.319e-01
-36.870	10.240	2.333e-01
-30.725	10.240	2.343e-01
-24.580	10.240	2.351e-01
-18.435	10.240	2.355e-01
-12.290	10.240	2.357e-01
-6.145	10.240	2.356e-01
0.000	10.240	2.353e-01
6.145	10.240	2.347e-01
12.290	10.240	2.338e-01
18.435	10.240	2.326e-01
24.580	10.240	2.311e-01
30.725	10.240	2.293e-01
36.870	10.240	2.271e-01
43.015	10.240	2.246e-01
49.160	10.240	2.217e-01
55.305	10.240	2.183e-01
61.450	10.240	2.145e-01
-61.450	10.752	1.988e-01
-55.305	10.752	2.008e-01
-49.160	10.752	2.026e-01
-43.015	10.752	2.040e-01
-36.870	10.752	2.052e-01
-30.725	10.752	2.061e-01
-24.580	10.752	2.068e-01
-18.435	10.752	2.072e-01
-12.290	10.752	2.073e-01
-6.145	10.752	2.073e-01
0.000	10.752	2.070e-01
6.145	10.752	2.064e-01
12.290	10.752	2.057e-01
18.435	10.752	2.046e-01
24.580	10.752	2.033e-01
30.725	10.752	2.017e-01
36.870	10.752	1.998e-01

43.015	10.752	1.976e-01
49.160	10.752	1.950e-01
55.305	10.752	1.920e-01
61.450	10.752	1.887e-01
-61.450	11.264	1.757e-01
-55.305	11.264	1.775e-01
-49.160	11.264	1.790e-01
-43.015	11.264	1.803e-01
-36.870	11.264	1.813e-01
-30.725	11.264	1.821e-01
-24.580	11.264	1.827e-01
-18.435	11.264	1.831e-01
-12.290	11.264	1.832e-01
-6.145	11.264	1.832e-01
0.000	11.264	1.829e-01
6.145	11.264	1.824e-01
12.290	11.264	1.817e-01
18.435	11.264	1.808e-01
24.580	11.264	1.797e-01
30.725	11.264	1.782e-01
36.870	11.264	1.766e-01
43.015	11.264	1.746e-01
49.160	11.264	1.723e-01
55.305	11.264	1.697e-01
61.450	11.264	1.667e-01
-61.450	11.776	1.559e-01
-55.305	11.776	1.575e-01
-49.160	11.776	1.589e-01
-43.015	11.776	1.600e-01
-36.870	11.776	1.609e-01
-30.725	11.776	1.616e-01
-24.580	11.776	1.622e-01
-18.435	11.776	1.625e-01
-12.290	11.776	1.626e-01
-6.145	11.776	1.625e-01
0.000	11.776	1.623e-01
6.145	11.776	1.619e-01
12.290	11.776	1.613e-01
18.435	11.776	1.605e-01
24.580	11.776	1.595e-01
30.725	11.776	1.582e-01
36.870	11.776	1.567e-01
43.015	11.776	1.550e-01
49.160	11.776	1.529e-01
55.305	11.776	1.506e-01
61.450	11.776	1.480e-01
-61.450	12.288	1.390e-01
-55.305	12.288	1.404e-01
-49.160	12.288	1.416e-01
-43.015	12.288	1.426e-01
-36.870	12.288	1.434e-01
-30.725	12.288	1.441e-01
-24.580	12.288	1.445e-01
-18.435	12.288	1.448e-01
-12.290	12.288	1.449e-01
-6.145	12.288	1.449e-01
0.000	12.288	1.447e-01
6.145	12.288	1.443e-01
12.290	12.288	1.437e-01
18.435	12.288	1.430e-01
24.580	12.288	1.421e-01
30.725	12.288	1.410e-01

Subject: power density for ps 6
Date: Thu, 10 Jun 1999 16:10:39 -0700
From: Steve Marks <s_marks@lbl.gov>
Organization: Lawrence Berkeley National Laboratory
To: Carol A Corradi <CACorradi@lbl.gov>

This is power density for photon stop #6. The data format is same as before: (x, y) are attached to local rotated coordinate system.

Ee = 1.9, I = 0.4

# x(mm)	y(mm)	dP(W/mm^2)
-68.250	-12.800	1.495e-01
-61.425	-12.800	1.488e-01
-54.600	-12.800	1.480e-01
-47.775	-12.800	1.471e-01
-40.950	-12.800	1.462e-01
-34.125	-12.800	1.452e-01
-27.300	-12.800	1.441e-01
-20.475	-12.800	1.429e-01
-13.650	-12.800	1.416e-01
-6.825	-12.800	1.402e-01
0.000	-12.800	1.388e-01
6.825	-12.800	1.372e-01
13.650	-12.800	1.356e-01
20.475	-12.800	1.338e-01
27.300	-12.800	1.319e-01
34.125	-12.800	1.299e-01
40.950	-12.800	1.278e-01
47.775	-12.800	1.255e-01
54.600	-12.800	1.231e-01
61.425	-12.800	1.206e-01
68.250	-12.800	1.179e-01
-68.250	-11.520	1.890e-01
-61.425	-11.520	1.881e-01
-54.600	-11.520	1.871e-01
-47.775	-11.520	1.860e-01
-40.950	-11.520	1.848e-01
-34.125	-11.520	1.835e-01
-27.300	-11.520	1.822e-01
-20.475	-11.520	1.807e-01
-13.650	-11.520	1.791e-01
-6.825	-11.520	1.774e-01
0.000	-11.520	1.755e-01
6.825	-11.520	1.736e-01
13.650	-11.520	1.715e-01
20.475	-11.520	1.692e-01
27.300	-11.520	1.668e-01
34.125	-11.520	1.643e-01
40.950	-11.520	1.616e-01
47.775	-11.520	1.587e-01
54.600	-11.520	1.557e-01
61.425	-11.520	1.525e-01
68.250	-11.520	1.491e-01
-68.250	-10.240	2.416e-01
-61.425	-10.240	2.405e-01
-54.600	-10.240	2.392e-01
-47.775	-10.240	2.378e-01
-40.950	-10.240	2.363e-01
-34.125	-10.240	2.347e-01
-27.300	-10.240	2.330e-01

-34.125	-2.560	1.007e+00
-27.300	-2.560	1.001e+00
-20.475	-2.560	9.941e-01
-13.650	-2.560	9.865e-01
-6.825	-2.560	9.782e-01
0.000	-2.560	9.692e-01
6.825	-2.560	9.594e-01
13.650	-2.560	9.489e-01
20.475	-2.560	9.375e-01
27.300	-2.560	9.252e-01
34.125	-2.560	9.120e-01
40.950	-2.560	8.979e-01
47.775	-2.560	8.827e-01
54.600	-2.560	8.665e-01
61.425	-2.560	8.492e-01
68.250	-2.560	8.308e-01
-68.250	-1.280	1.166e+00
-61.425	-1.280	1.162e+00
-54.600	-1.280	1.158e+00
-47.775	-1.280	1.153e+00
-40.950	-1.280	1.147e+00
-34.125	-1.280	1.141e+00
-27.300	-1.280	1.134e+00
-20.475	-1.280	1.126e+00
-13.650	-1.280	1.118e+00
-6.825	-1.280	1.108e+00
0.000	-1.280	1.098e+00
6.825	-1.280	1.088e+00
13.650	-1.280	1.076e+00
20.475	-1.280	1.063e+00
27.300	-1.280	1.049e+00
34.125	-1.280	1.034e+00
40.950	-1.280	1.018e+00
47.775	-1.280	1.001e+00
54.600	-1.280	9.829e-01
61.425	-1.280	9.634e-01
68.250	-1.280	9.426e-01
-68.250	0.000	1.217e+00
-61.425	0.000	1.213e+00
-54.600	0.000	1.208e+00
-47.775	0.000	1.203e+00
-40.950	0.000	1.197e+00
-34.125	0.000	1.191e+00
-27.300	0.000	1.183e+00
-20.475	0.000	1.175e+00
-13.650	0.000	1.167e+00
-6.825	0.000	1.157e+00
0.000	0.000	1.147e+00
6.825	0.000	1.135e+00
13.650	0.000	1.123e+00
20.475	0.000	1.109e+00
27.300	0.000	1.095e+00
34.125	0.000	1.079e+00
40.950	0.000	1.063e+00
47.775	0.000	1.045e+00
54.600	0.000	1.026e+00
61.425	0.000	1.005e+00
68.250	0.000	9.834e-01
-68.250	1.280	1.163e+00
-61.425	1.280	1.159e+00
-54.600	1.280	1.155e+00
-47.775	1.280	1.150e+00

36

-40.950	1.280	1.144e+00
-34.125	1.280	1.138e+00
-27.300	1.280	1.131e+00
-20.475	1.280	1.123e+00
-13.650	1.280	1.114e+00
-6.825	1.280	1.105e+00
0.000	1.280	1.095e+00
6.825	1.280	1.084e+00
13.650	1.280	1.072e+00
20.475	1.280	1.059e+00
27.300	1.280	1.045e+00
34.125	1.280	1.030e+00
40.950	1.280	1.013e+00
47.775	1.280	9.962e-01
54.600	1.280	9.777e-01
61.425	1.280	9.580e-01
68.250	1.280	9.369e-01
-68.250	2.560	1.026e+00
-61.425	2.560	1.022e+00
-54.600	2.560	1.018e+00
-47.775	2.560	1.013e+00
-40.950	2.560	1.008e+00
-34.125	2.560	1.002e+00
-27.300	2.560	9.956e-01
-20.475	2.560	9.884e-01
-13.650	2.560	9.806e-01
-6.825	2.560	9.721e-01
0.000	2.560	9.628e-01
6.825	2.560	9.528e-01
13.650	2.560	9.419e-01
20.475	2.560	9.302e-01
27.300	2.560	9.176e-01
34.125	2.560	9.041e-01
40.950	2.560	8.896e-01
47.775	2.560	8.741e-01
54.600	2.560	8.576e-01
61.425	2.560	8.400e-01
68.250	2.560	8.211e-01
-68.250	3.840	8.496e-01
-61.425	3.840	8.462e-01
-54.600	3.840	8.424e-01
-47.775	3.840	8.381e-01
-40.950	3.840	8.334e-01
-34.125	3.840	8.282e-01
-27.300	3.840	8.225e-01
-20.475	3.840	8.163e-01
-13.650	3.840	8.096e-01
-6.825	3.840	8.022e-01
0.000	3.840	7.942e-01
6.825	3.840	7.856e-01
13.650	3.840	7.764e-01
20.475	3.840	7.664e-01
27.300	3.840	7.558e-01
34.125	3.840	7.443e-01
40.950	3.840	7.321e-01
47.775	3.840	7.190e-01
54.600	3.840	7.051e-01
61.425	3.840	6.902e-01
68.250	3.840	6.744e-01
-68.250	5.120	6.743e-01
-61.425	5.120	6.714e-01
-54.600	5.120	6.681e-01

-61.425	12.800	1.474e-01
-54.600	12.800	1.464e-01
-47.775	12.800	1.454e-01
-40.950	12.800	1.443e-01
-34.125	12.800	1.431e-01
-27.300	12.800	1.419e-01
-20.475	12.800	1.405e-01
-13.650	12.800	1.390e-01
-6.825	12.800	1.375e-01
0.000	12.800	1.358e-01
6.825	12.800	1.341e-01
13.650	12.800	1.322e-01
20.475	12.800	1.302e-01
27.300	12.800	1.281e-01
34.125	12.800	1.258e-01
40.950	12.800	1.234e-01
47.775	12.800	1.209e-01
54.600	12.800	1.183e-01
61.425	12.800	1.155e-01
68.250	12.800	1.125e-01

Steve Marks <s_marks@lbl.gov>

Appendix II. Convection coefficients calculations

Photon stop
1 GPM

CONVECTIVE FILM COEFFICENT CALCULATIONS FOR WATER

Fluid Flow Heat Transfer Equations

10/26/99

Change only Values that appear in Bold
This sheet for Rectangular Sections

Height,in	Width, in	Length, in
0.160	**0.188**	**3.937**

Tube Width, μ	Tube Height, μ	Ratio
4775.20	100000.00	21

HYDRAULIC DIAMETER Dh = 4A/P

A [sq.in.]	P [in.]	Dh [in.]	equivalent Diam [in.]
0.03	0.70	0.17	0.20

A [sq.cm]	P [cm]	Dh [cm.]
0.19	1.77	0.44

FLOW RATE q = VA
FLOW RATE Q [gal/min] = (q [cu.ft/sec])(60 [sec/min])(7.479 [gal/cu.ft])

V [ft/sec]	A [sq.ft]	q [cu.ft/sec]	Q [gal/min]
10.00	2.09E-04	2.09E-03	[illegible]

REYNOLDS NUMBER= 13330
Re = (V [ft.sec] x Dh [ft] x rho [lbm/cu.ft]) / mu [lbm/ft.sec]

V [ft/sec]	Dh [ft]	rho [lbm/cu.ft] @20 deg.C	mu [lbm/ft.sec] @20 deg.C
10.00	1.44E-02	62.3	6.73E-04

CONVECTION HEAT TRANSFER
Film Coefficient hf = (k/Dh) x Nu

Conductivity k [W/cm-K] @20°C	Hydraulic. Dia. Dh [cm]	Prandtl Pr @20°C
6.02E-03	0.439098851	8.56

per Seider and Tate Eqn's (+/- 25%)
Eq 6-2 (Conservative w/res to 6-3)
(mu/muW = 1)

Nu	TURBULENT Film Coefficent hf [W/sq.mm-K]	Re > 3000	
110.17	1.51E-02	1.89E-02	for +25%
		1.13E-02	for -25%

WATER TEMPERATURE RISE
Delta-T [deg.C] = .0038 x P [W] / Q [gal/min]

P [W] *	Q [gal/min]	Delta-T [deg.C]	
400	0.94	1.6	<-Should be less than 40°C
100	0.94	0.4	

*See page 178 of Holman's Heat Transfer (Orange cover)
Recall Nu=hD/K

Eq. 6-5 Nusselt Number LAMINAR (assumes mu/muW = 1)

Nu	Channel Length L [cm]	LAMINAR Film Coefficent hf [W/sq.mm-K] (assumes Re Pr Dh/L>10)	hf +/- 25%	
31.83	10.00	4.36E-03	5.45E-03	for +25%
			3.27E-03	for -25%

For L= **100** mm
Re Pr Dh/L = 5010.3

proton stop
0.3 GPM

CONVECTIVE FILM COEFFICENT CALCULATIONS FOR WATER

Fluid Flow Heat Transfer Equations

10/26/99

Change only Values that appear in Bold
This sheet for Rectangular Sections

Height,in	Width, in	Length, in
0.160	**0.188**	3.937

Tube Width, μ	Tube Height, μ	Ratio
4775.20	100000.00	21

HYDRAULIC DIAMETER Dh = 4A/P

A [sq.in.]	P [in.]	Dh [in.]	equivalent Diam [in.]
0.03	0.70	0.17	0.20

A [sq.cm]	P [cm]	Dh [cm.]
0.19	1.77	0.44

FLOW RATE q = VA
FLOW RATE Q [gal/min] = (q [cu.ft/sec])(60 [sec/min])(7.479 [gal/cu.ft])

V [ft/sec]	A [sq.ft]	q [cu.ft/sec]	Q [gal/min]
3.20	2.09E-04	6.68E-04	[illegible]

REYNOLDS NUMBER= 4266

Re = (V [ft.sec] x Dh [ft] x rho [lbm/cu.ft]) / mu [lbm/ft.sec]

V [ft/sec]	Dh [ft]	rho [lbm/cu.ft] @20 deg.C	mu [lbm/ft.sec] @20 deg.C
3.20	1.44E-02	62.3	6.73E-04

CONVECTION HEAT TRANSFER

Film Coefficient hf = (k/Dh) x Nu

Conductivity k [W/cm-K] @20°C	Hydraulic. Dia. Dh [cm]	Prandtl Pr @20°C
6.02E-03	0.439098851	8.56

per Seider and Tate Eqn's (+/- 25%)
Eq 6-2 (Conservative w/res to 6-3)
(mu/muW = 1)

Nu	TURBULENT Film Coefficent hf [W/sq.mm-K]	Re > 3000	
44.28	[illegible]	7.59E-03	for +25%
		4.55E-03	for -25%

WATER TEMPERATURE RISE

Delta-T [deg.C] = .0038 x P [W] / Q [gal/min]

P [W] *	Q [gal/min]	Delta-T [deg.C]	
400	0.30	5.1	<-Should be less than 40°C
100	0.30	1.3	

*See page 178 of Holman's Heat Transfer (Orange cover)
Recall Nu=hD/K

Eq. 6-5 Nusselt Number LAMINAR (assumes mu/muW = 1)	Channel Length L [cm]	LAMINAR Film Coefficent hf [W/sq.mm-K] (assumes Re Pr Dh/L>10)	hf +/- 25%	
21.77	10.00	2.98E-03	3.73E-03	for +25%
			2.24E-03	for -25%

For L= **100** mm
Re Pr Dh/L = 1603.3

blank-off flange 4c
1 GPM

CONVECTIVE FILM COEFFICENT CALCULATIONS FOR WATER

Fluid Flow Heat Transfer Equations

10/26/99

Height,in	Width, in	Length, in
0.500	**0.091**	**3.937**

Change only Values that appear in Bold
This sheet for Rectangular Sections

Tube Width, μ	Tube Height, μ	Ratio
2300.00	100000.00	43

HYDRAULIC DIAMETER Dh = 4A/P

A [sq.in.]	P [in.]	Dh [in.]	equivalent Diam [in.]
0.05	1.18	0.15	0.24

A [sq.cm]	P [cm]	Dh [cm.]
0.29	3.00	0.39

FLOW RATE q = VA
FLOW RATE Q [gal/min] = (q [cu.ft/sec])(60 [sec/min])(7.479 [gal/cu.ft])

V [ft/sec]	A [sq.ft]	q [cu.ft/sec]	Q [gal/min]
7.00	3.14E-04	2.20E-03	[illegible]

REYNOLDS NUMBER= 8276
Re = (V [ft.sec] x Dh [ft] x rho [lbm/cu.ft]) / mu [lbm/ft.sec]

V [ft/sec]	Dh [ft]	rho [lbm/cu.ft]	mu [lbm/ft.sec]
7.00	1.28E-02	62.3	6.73E-04
		@20 deg.C	@20 deg.C

CONVECTION HEAT TRANSFER
Film Coefficient hf = (k/Dh) x Nu

Conductivity k [W/cm-K] @20°C	Hydraulic. Dia. Dh [cm]	Prandtl Pr @20°C
6.02E-03	0.389466667	8.56

per Seider and Tate Eqn's (+/- 25%)
Eq 6-2 (Conservative w/res to 6-3)
(mu/muW = 1)

Nu	TURBULENT Film Coefficent hf [W/sq.mm-K]	Re > 3000	
75.24	1.16E-02	1.45E-02	for +25%
		8.72E-03	for -25%

WATER TEMPERATURE RISE
Delta-T [deg.C] = .0038 x P [W] / Q [gal/min]

P [W] *	Q [gal/min]	Delta-T [deg.C]	
400	0.99	1.5	<-Should be less than 40°C
100	0.99	0.4	

*See page 178 of Holman's Heat Transfer (Orange cover)
Recall Nu=hD/K

Eq. 6-5 Nusselt Number LAMINAR (assumes mu/muW = 1)

Nusselt Number	Channel Length L [cm]	LAMINAR Film Coefficent hf [W/sq.mm-K] (assumes Re Pr Dh/L>10)	hf +/- 25%	
26.09	10.00	4.03E-03	5.04E-03	for +25%
			3.02E-03	for -25%

For L= **100** mm
Re Pr Dh/L = 2759.2

Copper Alloys

Oxygen-Free, High Conductivity Copper, OFHC Copper

CHEMICAL COMPOSITION (%) =
Cu99.95 Min.

PHYSICAL PROPERTIES		
MELTING RANGE (°F)	=	1981
DENSITY (lbs/in³) 68F	=	0.323
THERMAL EXPANSION (in/in °F x 10 to the power of -6)	=	9.8 (68-572F)
ELECTRICAL RESISTIVITY (ohms/cir mil/ft.)68F	=	10.3

MECHANICAL PROPERTIES - TEMPER = A		
TENSILE STRENGTH (psi x 10^3)	=	32
YIELD STRENGTH (psi x 10^3)	=	10
ELONGATION (%)	=	45
HARDNESS	=	F40 (Rockwell)

MECHANICAL PROPERTIES - TEMPER = H/2		
TENSILE STRENGTH (psi x 10^3)	=	45
YIELD STRENGTH (psi x 10^3)	=	35
ELONGATION (%)	=	20
HARDNESS	=	F80 (Rockwell)

MECHANICAL PROPERTIES - TEMPER = H		
TENSILE STRENGTH (psi x 10^3)	=	50
YIELD STRENGTH (psi x 10^3)	=	45
ELONGATION (%)	=	10
HARDNESS	=	B50 (Rockwell)

APPLICATIONS AND CHARACTERISTICS
Glass-to-metal seals

Metal Powders
Cubond® Brazing Paste

GlidCop®
Microbond Solder Paste

OMG AMERICAS

GlidCop® Dispersion Strengthened Copper

GlidCop® is OMG Americas' registered trade name for copper that is dispersion strengthened with ultrafine particles of aluminum oxide. GlidCop® is produced using our patented internal oxidation powder metallurgy process whereby aluminum oxide is formed within the copper matrix. These oxide particles harden the copper matrix, while minimally reducing the electrical and thermal conductivity properties of the copper matrix. This results in a unique combination of high strength and high conductivity unmatched by other copper alloy systems. GlidCop® is even more unique in that the aluminum oxide particles are thermally very stable. They remain effective in strengthening the copper matrix and resisting grain coarsening even after very long exposures to high temperatures as in brazing or high temperature duty cycles. GlidCop®, thus, resists softening due to annealing up to temperatures in excess of 1000° C.

GlidCop® has been commercially available for over 20 years, and is available in three grades based on aluminum oxide content. GlidCop® AL- 15 has the lowest aluminum oxide content, thus, the lowest strength, but has physical properties closest to pure copper. GlidCop® AL-25 has slightly more aluminum oxide, which results in higher strength at the expense of a slight reduction in conductivities. The AL-60 grade has the most aluminum oxide and is the strongest grade, yet still has about 78-80% of pure copper's conductivities. All three GlidCop® grades can be further strengthened by cold work. GlidCop® can serve a broad range of strength and conductivity requirements based on the needs of an application.

Nominal chemistry and room temperature properties of the three GlidCop® grades are as follows.

	GlidCop® AL-15	GlidCop® AL-25	GlidCop® AL-60
Al_2O_3	.3 wt%	.5 wt%	1.1 wt%
Cu	Balance	Balance	Balance
Electrical Cond.	54 Meg S/m 92% IACS	50 Meg S/m 87% IACS	45 Meg S/m 78% IACS
Thermal Cond.	365 Watt/m/°K	344 Watt/m/°K	322 Watt/m/°K
Yield Strength (with 0% cold work)	255-331 MPa	296-372 MPa	413-517 MPa
Yield Strength (with 70% cold work)	441-517 MPa	469-544 MPa	551-600 MPa
Yield Strength (after 1000° anneal)	255-331 MPa	296-372 MPa	413-517 MPa

GlidCop® is available in a wide range of extruded and drawn shapes and sizes, including rounds, rectangles, wire, plates, tubes, and strip. It is also available on a limited basis in powder form for select P/M applications.

For applications that require excellent electrical and thermal conductivities combined with high strength and exceptional resistance to high temperature annealing, GlidCop® is the answer. Contact us us for more information.