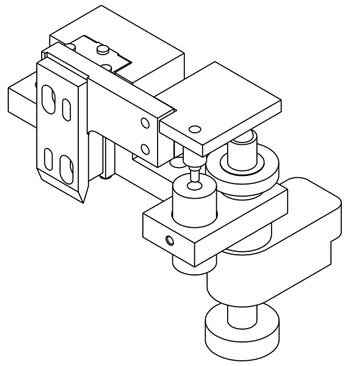

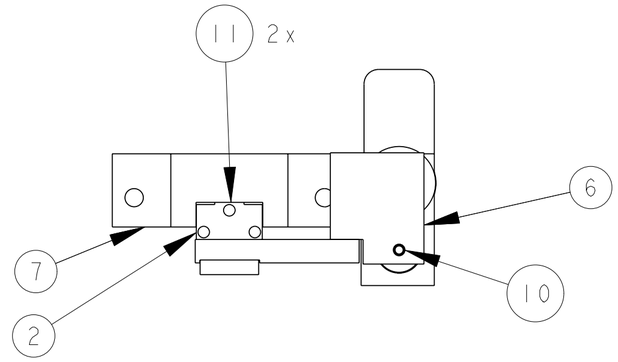

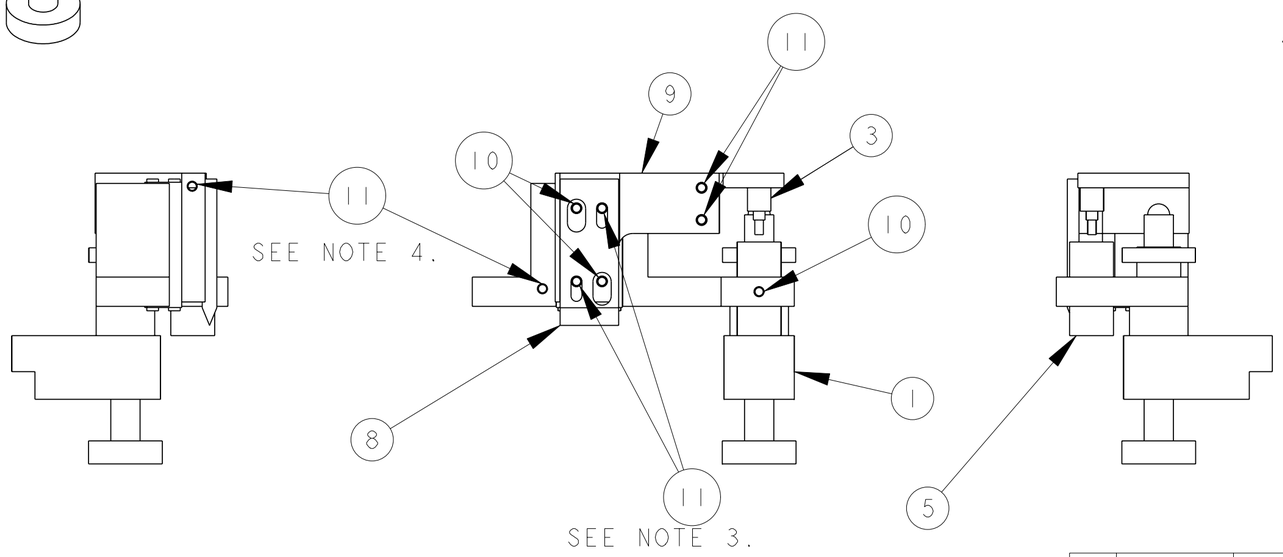

NOTES:
1. THIS IS AN ULTRA-HIGH VACUUM PART. THE USE OF RESIN-BONDED ABRASIVES IS PROHIBITED. VITRIFIED BONDED ABRASIVES ARE OKAY.
2. THE USE OF SILICON- OR SULFER-BEARING CUTTING FLUIDS IS PROHIBITED.
3. ONLY THESE SCREWS ARE NECESSARY IN ORDER TO ADJUST ITEM 8.
4. ADJUST SCREWS TO PROTRUDE ENOUGH IN ORDER TO MOUNT EXTENSION SPRING.

25H205 3

ITEM	PART NO	DESCRIPTION	MATERIAL	REQD	DESIGNER	MAT Location
14				1		
13				1		
12				1		
11		SHCS, STAINLESS 2-56 x .375"		8		
10		SHCS, STAINLESS 2-56 x .25"		4		
9	25H202	SCRAPER PLATE	-	1	D.CHENG	
8	25H203	MOLYBDENUM SCRAPER BLADE	-	1	D.CHENG	
7	25H200	MAIN BRACKET	-	1	D.CHENG	
6	25H201	PICOMOTOR ARM BRACKET	-	1	D.CHENG	
5	25H205	BEAM SCRAPER ASSEMBLY	-	1	D.CHENG	
4	25H204	LVDT CORE MOUNT	-	1	D.CHENG	
3	RX1-1	CROSSED ROLLER SLIDE, 1" L, TUSK INC.		1	-	
2	CD 375-100	MACRO SENSORS 1" LONG LVDT SENSOR	-	1	-	
1	8301-V	PICOMOTOR .5" MRA, NEW FOCUS, INC.		1		

REV	DWG	CHK	ZONE	DATE	CHANGES

UNLESS OTHERWISE SPECIFIED

TOLERANCES		
	X.X±0.1	FRAC.±1/64
	X.XX±0.03	Angles±1.00°
	X.XXX±0.010	FINISH 125

DO NOT SCALE PRINT

THREADS ARE CLASS 2
CHAMFER ENDS OF ALL SCREW TREADS 30°
CUT ROUND, 1.5 THREAD RELIEF ON MACHINED THREADS
BREAK EDGES .016 MAX. ON MACHINED WORK
REMOVE BURRS, WELD SPLATTER & LOOSE SCALE
IN ACCORDANCE WITH ASME Y14.5M & B46.1

SURFACE TREATMT	-		
IDENT METHOD	TAG		
DWG BY	D.CHENG	DATE	30-Jul-03
CHK BY	-	DATE	-

SHOP ORDERS

ACCT NO.	AFES-10	SERIAL NO.	-		
DATE ISSD	-	DATE REQD	-	NO. REQD	
DELIVER TO:					

LAWRENCE BERKELEY NATIONAL LABORATORY
UNIVERSITY OF CALIFORNIA-BERKELEY

DESIGNWORKS
BL 10.3.2 BEAM SCRAPER
BEAM SCRAPER ASSEMBLY

MICR FLM:	ASSEM	1/1	**SHEET 1 OF 1**
PAT CLR:	DWG. TYPE	SCALE	DWG NO. / SIZE / REV
DESIGN ACCT NO.	CATEGORY CODE	SHOWN ON	
AFES-10	AL6061	nnXnnn	25H205 3

Drawing: 25H2053_ASSY Type: ASSEM Model: ASSY