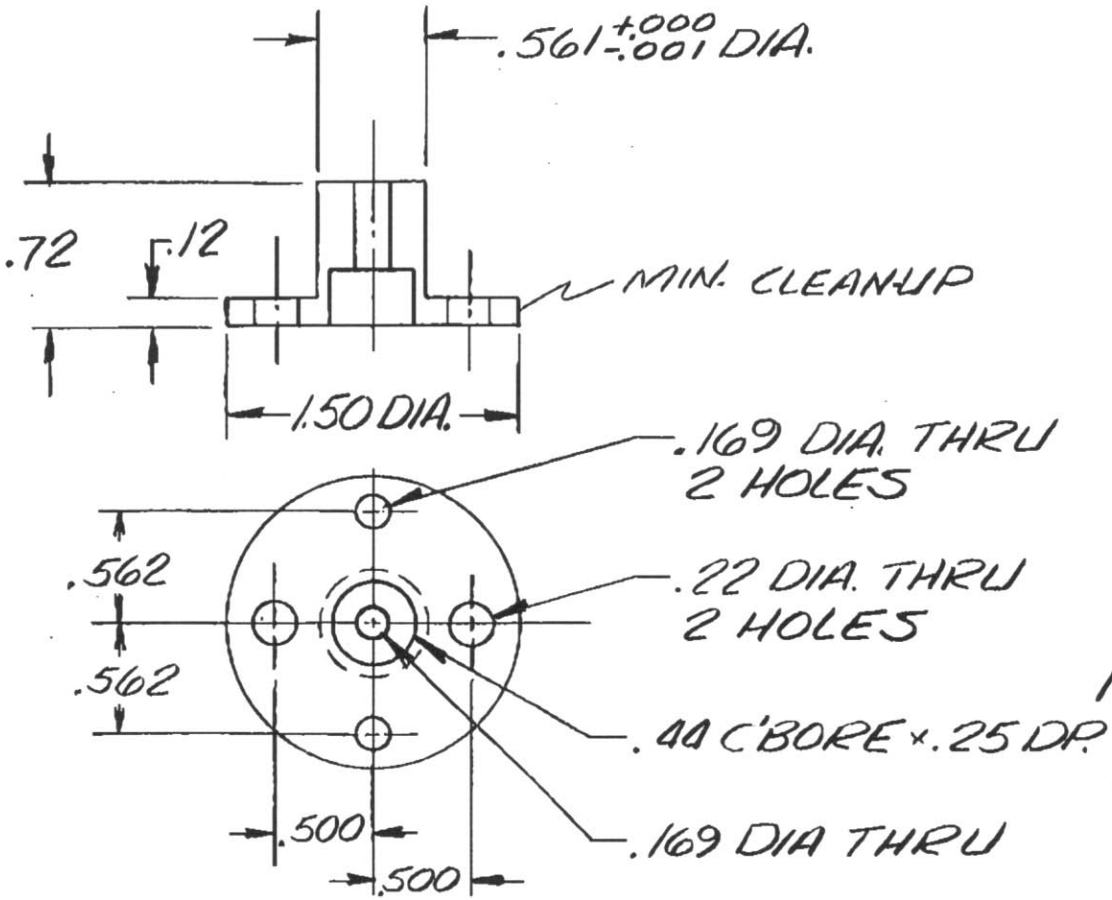

NOTES:

1.) REMOVE BURRS & BREAK SHARP EDGES.

UNLESS OTHERWISE SPECIFIED DIMENSIONS ARE IN INCHES TOLERANCES ON FRACTIONS: 0 TO 4 ± 1/32; 4 TO 8 ± 1/16; 8 AND UP ± 1/8 DECIMALS: .XX ± .01; .XXX ± .005 ANGLES: ± 0° 30'	THE INFORMATION CONTAINED HEREIN IS BEING MADE AVAILABLE ONLY AS THE PROPERTY OF AND FOR THE PURPOSES OF IT CANNOT BE LAWFULLY REPRODUCED IN ANY FORM NOR DIVULGED TO ANY THIRD PARTY, NOR USED FOR ANY PURPOSE OTHER THAN THAT FOR WHICH IT HAS BEEN MADE AVAILABLE TO YOU, WITHOUT THE EXPRESS WRITTEN CONSENT		
RMS FINISH 63 ✓ ALL ~~EXCEPT AS NOTED~~ OVER	DRAWN	R. REBICH	11-25-74
	CHECKED		
MATERIAL 6061-T6 ALUM 1½ DIA ALUM	DESIGN		
	ENGRG		
FINISH BLACK ANODIZE	APPD		
	APPD		

BASE

CODE IDENT NO	SIZE	
13471	A	212
SCALE FULL	7/81	SHEET 1 of

PR 8492-767

POLYBLU A. B. SMITH CO., PGH., PA.