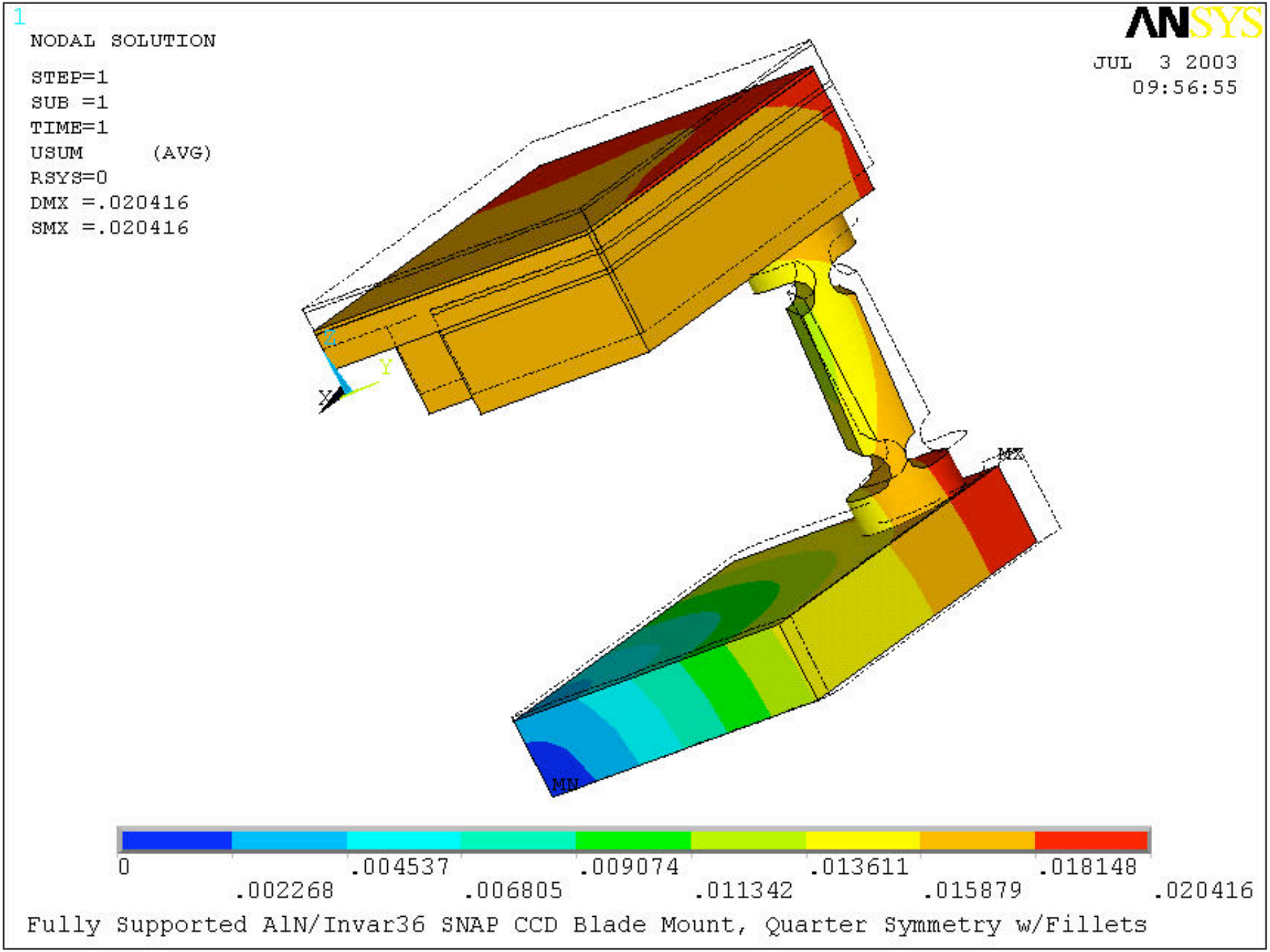
1
NODAL SOLUTION
STEP=1
SUB =1
TIME=1
USUM (AVG)
RSYS=0
DMX =.020416
SMX =.020416
ANSYS
JUL 3 2003
09:56:55
Z
Y
X
MX
MN
0
.002268
.004537
.006805
.009074
.011342
.013611
.015879
.018148
.020416
Fully Supported AlN/Invar36 SNAP CCD Blade Mount, Quarter Symmetry w/Fillets

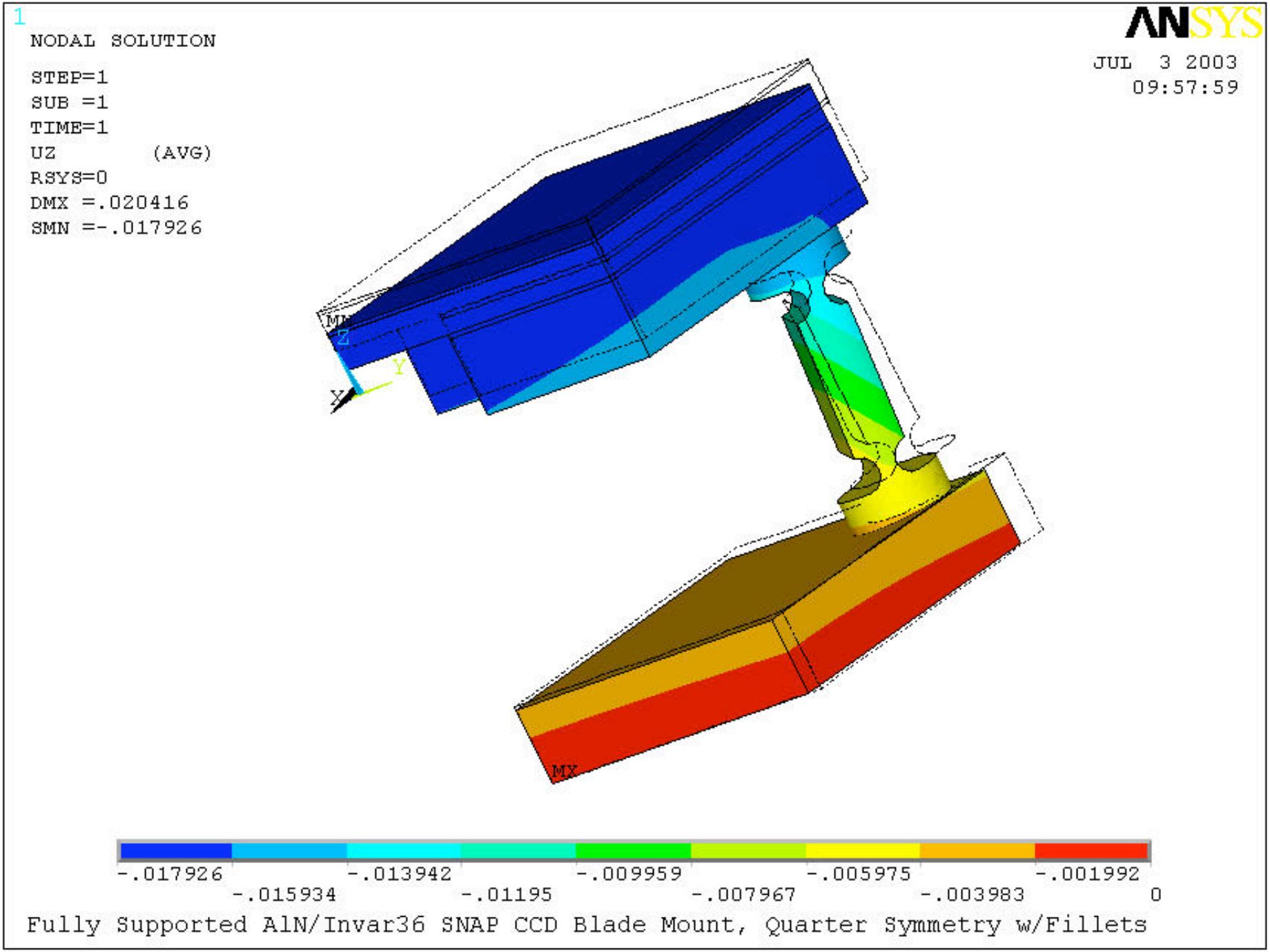

Fully Supported AlN/Invar36 SNAP CCD Blade Mount, Quarter Symmetry w/Fillets

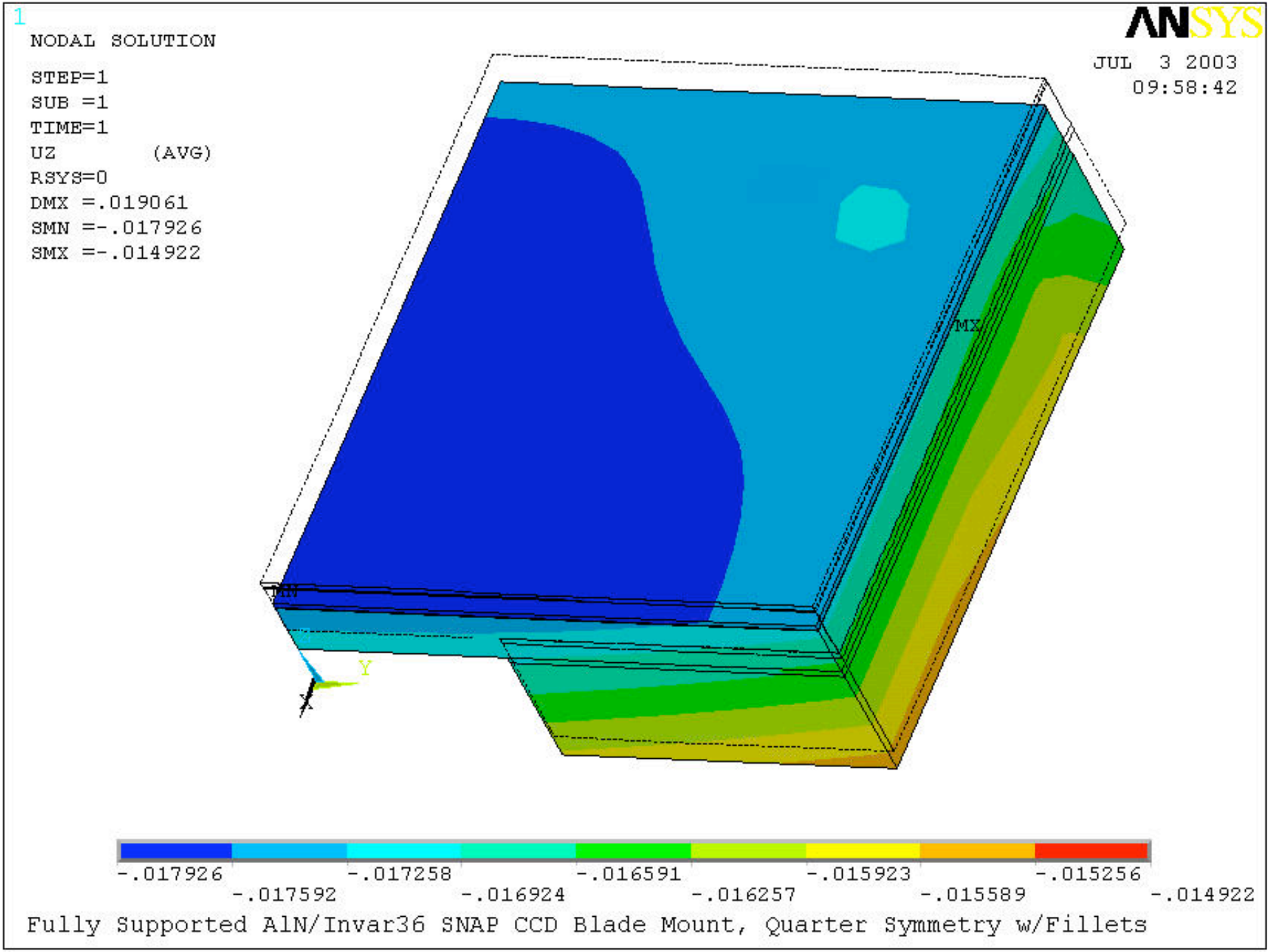

Fully Supported AlN/Invar36 SNAP CCD Blade Mount, Quarter Symmetry w/Fillets

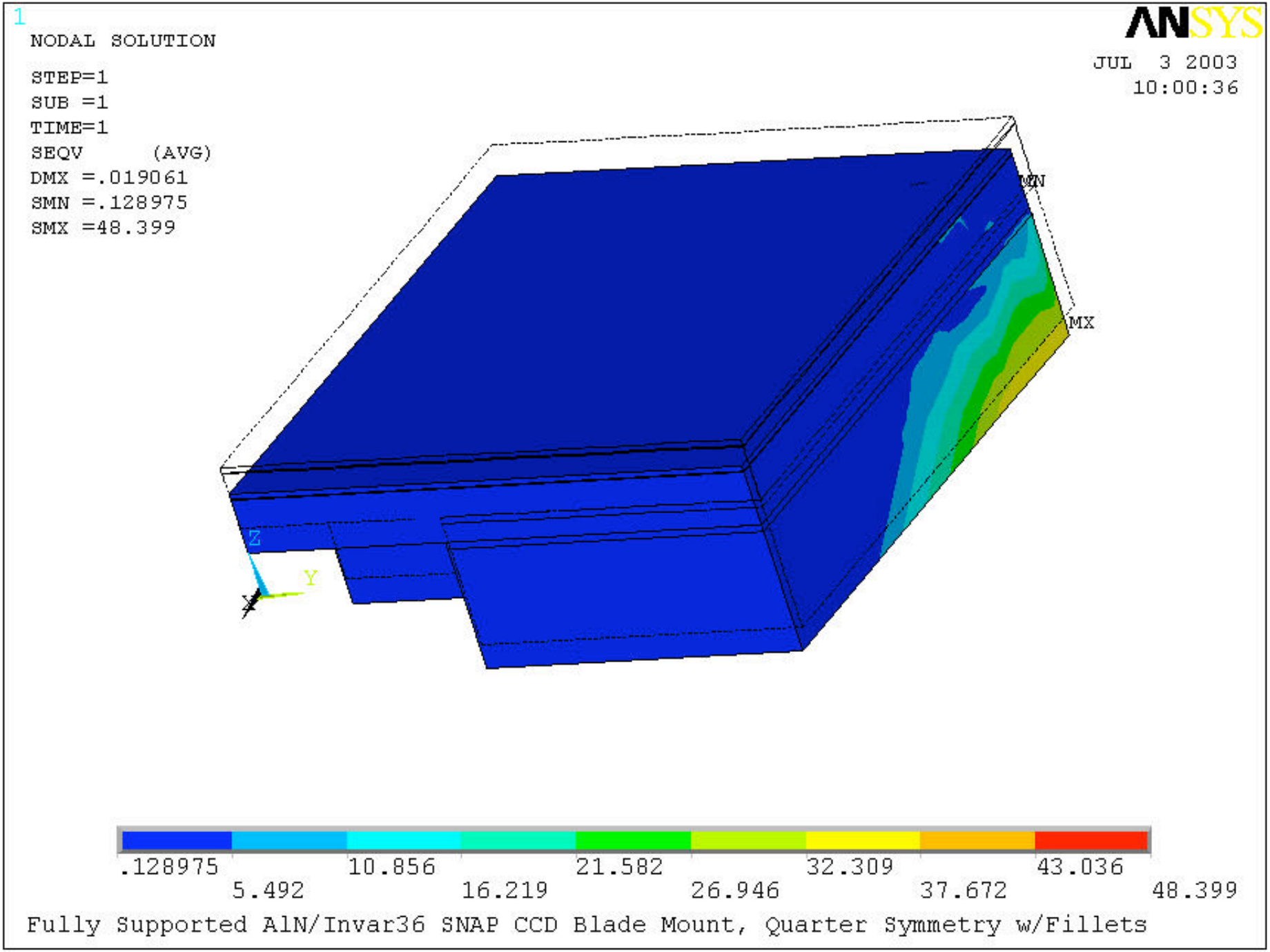
1
NODAL SOLUTION
STEP=1
SUB =1
TIME=1
SEQV (AVG)
DMX =.019061
SMN =.128975
SMX =48.399
ANSYS
JUL 3 2003
10:00:36
MN
MX
Z
Y
X
.128975
5.492
10.856
16.219
21.582
26.946
32.309
37.672
43.036
48.399
Fully Supported AlN/Invar36 SNAP CCD Blade Mount, Quarter Symmetry w/Fillets

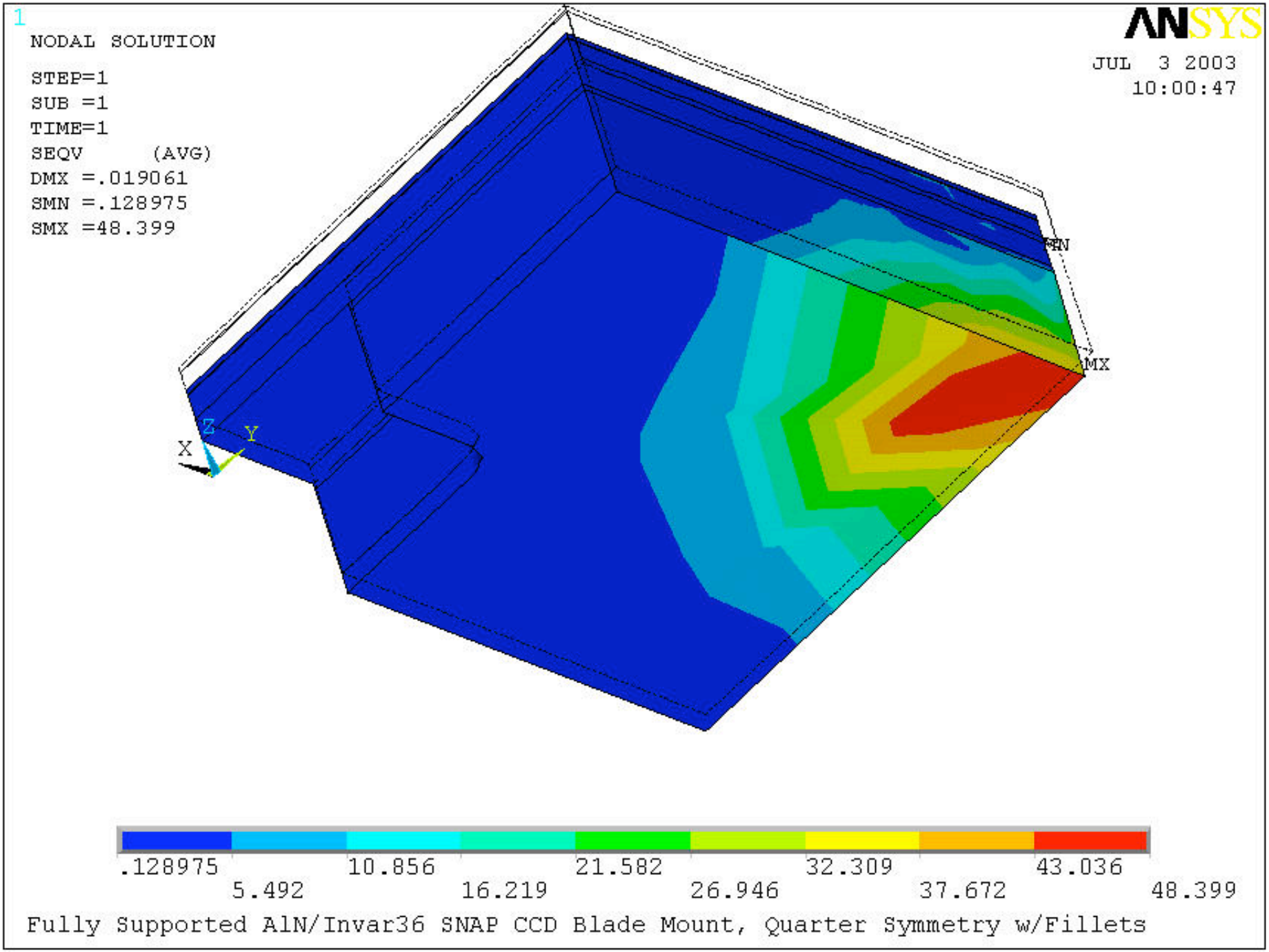
1
NODAL SOLUTION
STEP=1
SUB =1
TIME=1
SEQV (AVG)
DMX =.019061
SMN =.128975
SMX =48.399
ANSYS
JUL 3 2003
10:00:47
MN
MX
Z
Y
X
.128975
5.492
10.856
16.219
21.582
26.946
32.309
37.672
43.036
48.399
Fully Supported AlN/Invar36 SNAP CCD Blade Mount, Quarter Symmetry w/Fillets

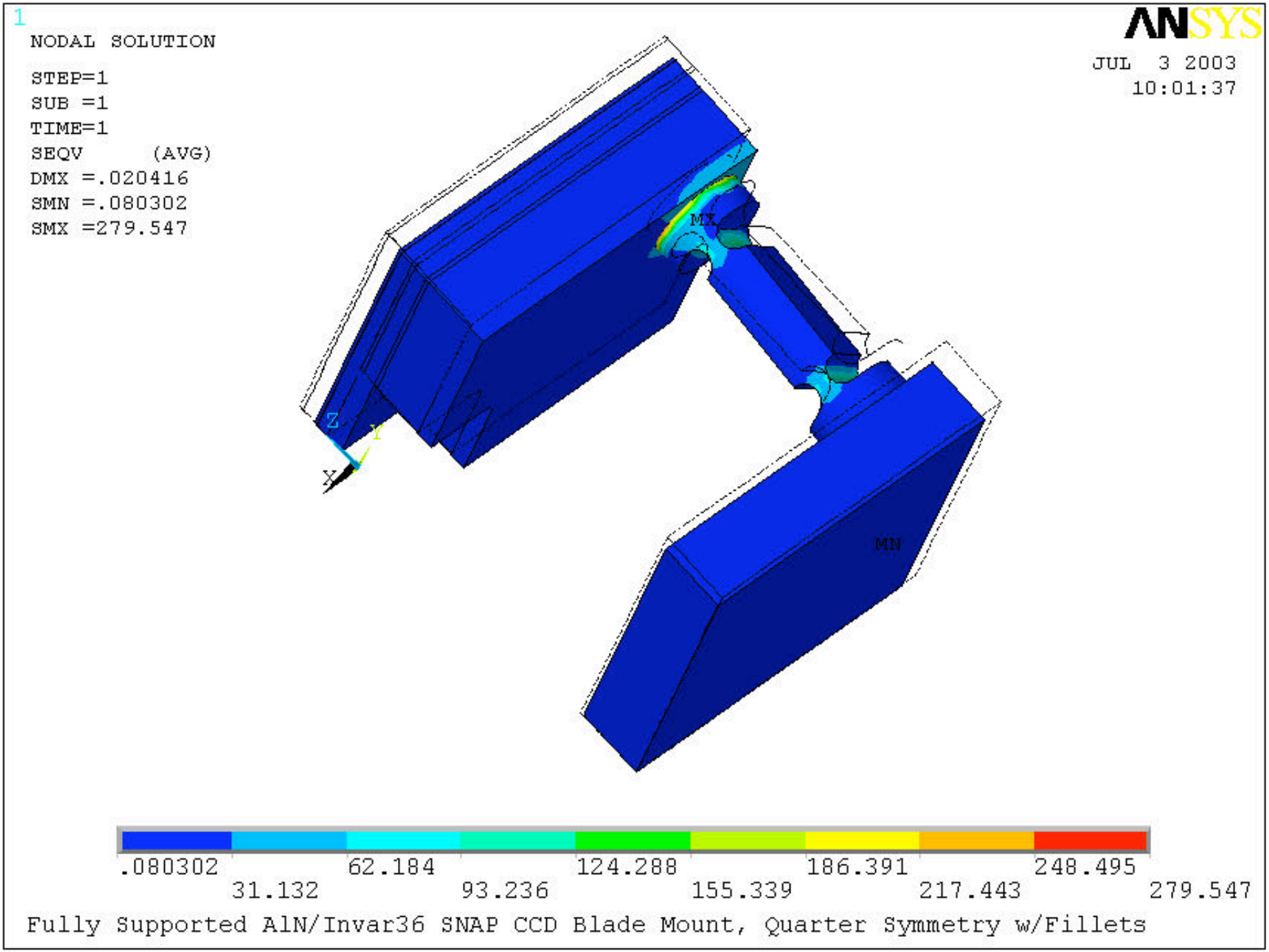
1
NODAL SOLUTION
STEP=1
SUB =1
TIME=1
SEQV (AVG)
DMX =.020416
SMN =.080302
SMX =279.547
ANSYS
JUL 3 2003
10:01:37
MX
MN
Z
Y
X
.080302
31.132
62.184
93.236
124.288
155.339
186.391
217.443
248.495
279.547
Fully Supported AlN/Invar36 SNAP CCD Blade Mount, Quarter Symmetry w/Fillets

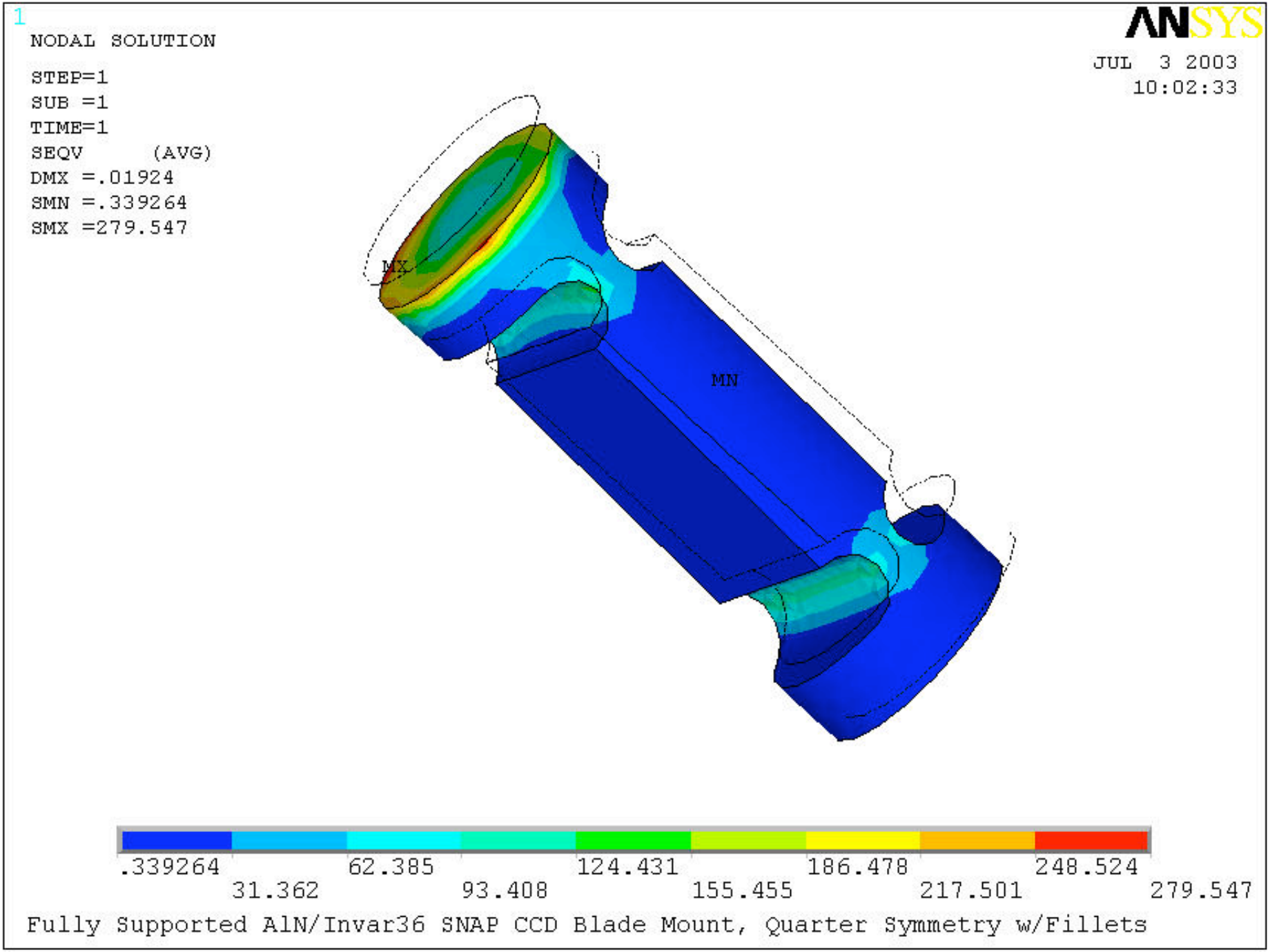
1
NODAL SOLUTION
STEP=1
SUB =1
TIME=1
SEQV (AVG)
DMX =.01924
SMN =.339264
SMX =279.547
ANSYS
JUL 3 2003
10:02:33
MX
MN
.339264
31.362
62.385
93.408
124.431
155.455
186.478
217.501
248.524
279.547
Fully Supported AlN/Invar36 SNAP CCD Blade Mount, Quarter Symmetry w/Fillets

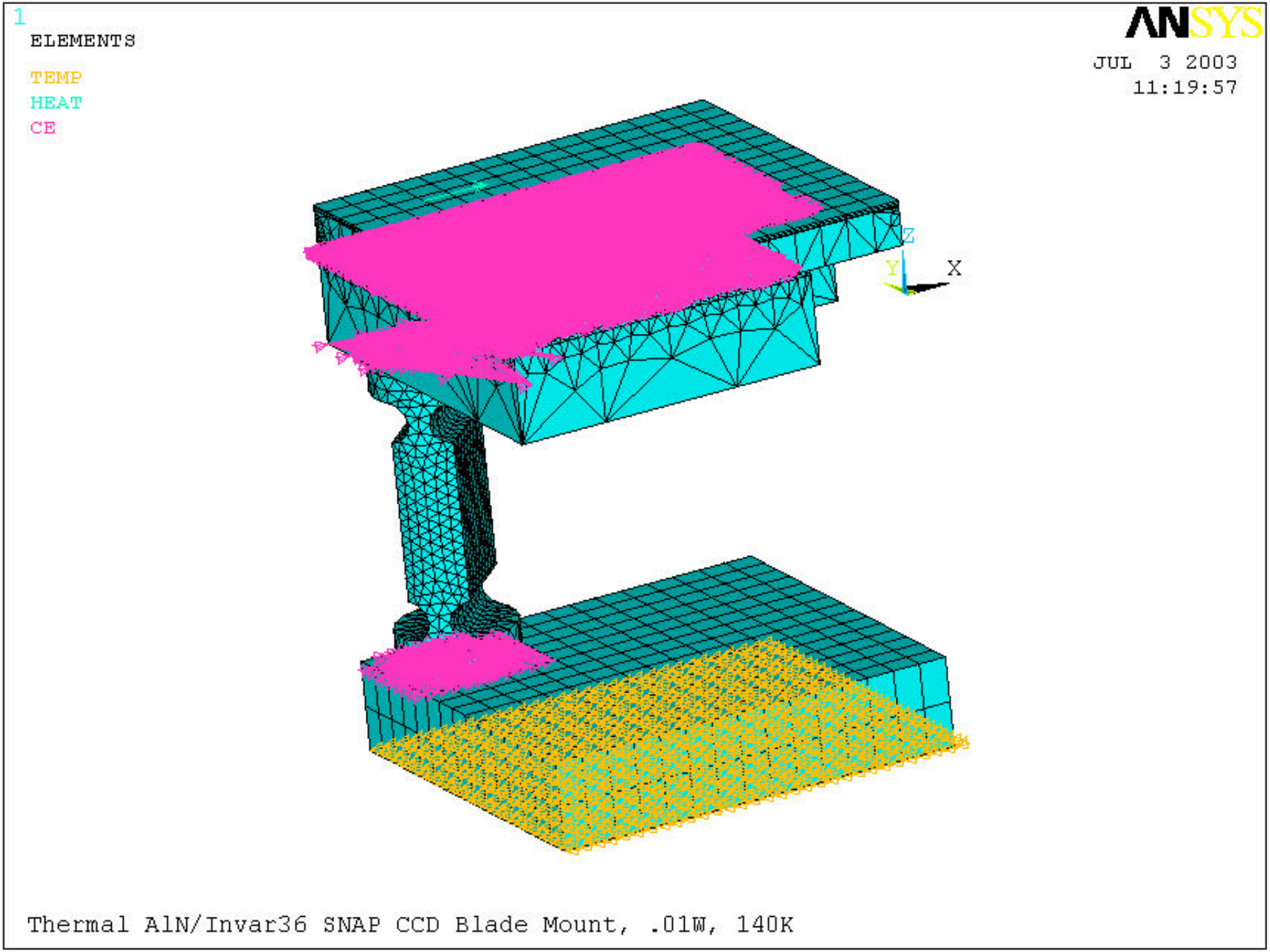
1
ELEMENTS
TEMP
HEAT
CE
ANSYS
JUL 3 2003
11:19:57
Z
Y
X
Thermal AlN/Invar36 SNAP CCD Blade Mount, .01W, 140K

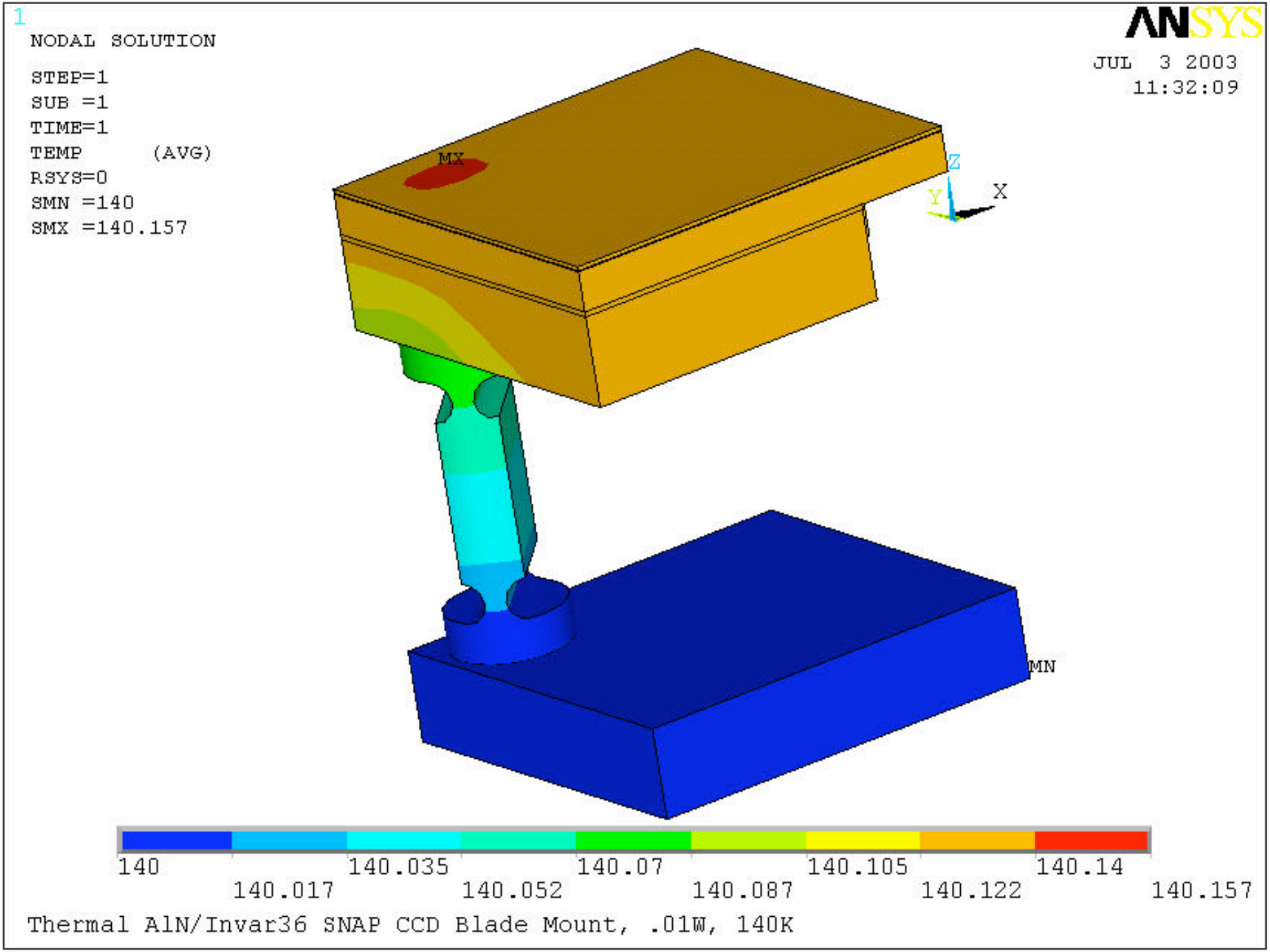
1
NODAL SOLUTION
STEP=1
SUB =1
TIME=1
TEMP (AVG)
RSYS=0
SMN =140
SMX =140.157
ANSYS
JUL 3 2003
11:32:09
MX
MN
Z
Y
X
140
140.017
140.035
140.052
140.07
140.087
140.105
140.122
140.14
140.157
Thermal AlN/Invar36 SNAP CCD Blade Mount, .01W, 140K

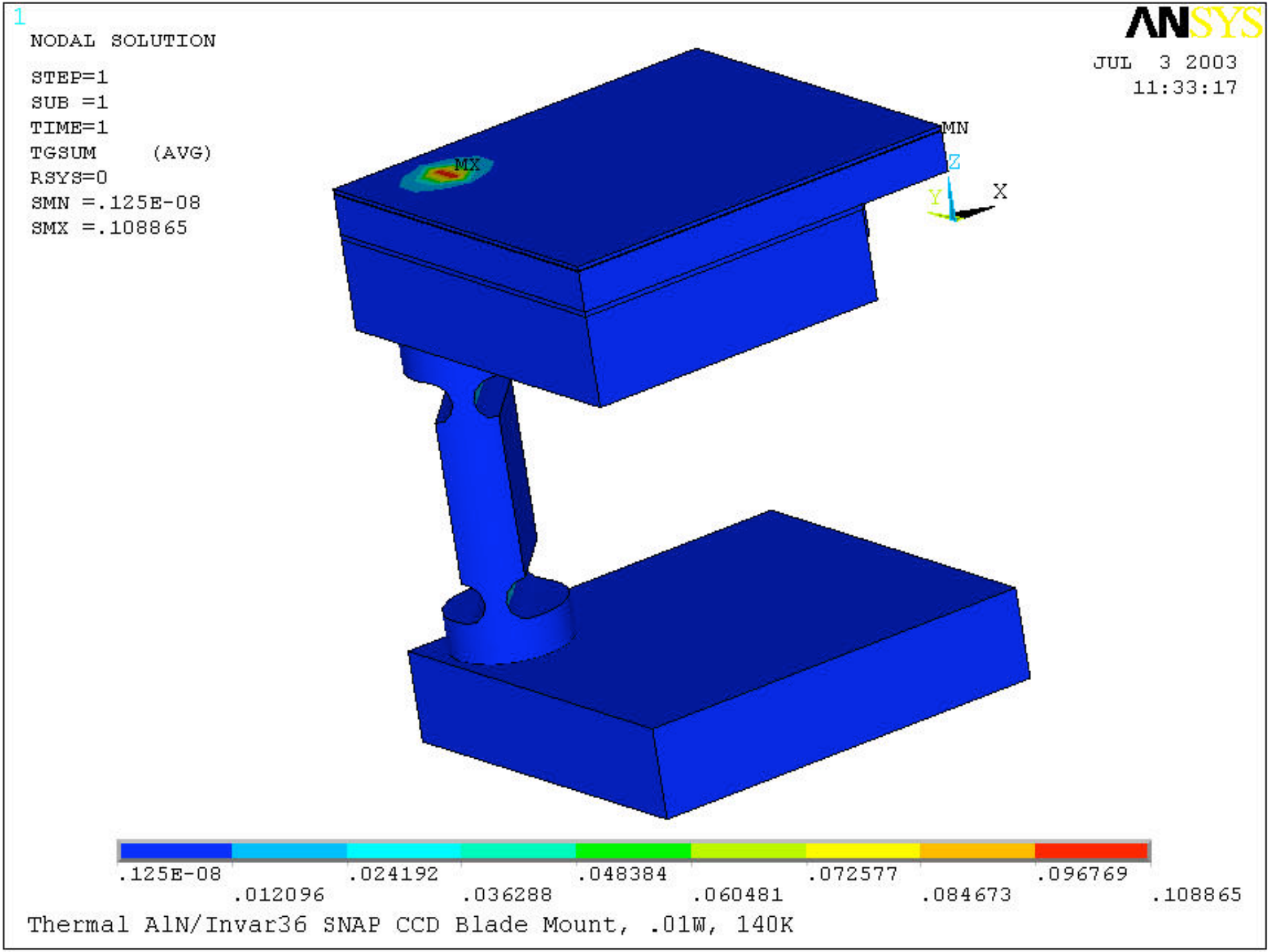
1
NODAL SOLUTION
STEP=1
SUB =1
TIME=1
TGSUM (AVG)
RSYS=0
SMN =.125E-08
SMX =.108865
ANSYS
JUL 3 2003
11:33:17
MN
MX
Z
Y
X
.125E-08
.012096
.024192
.036288
.048384
.060481
.072577
.084673
.096769
.108865
Thermal AlN/Invar36 SNAP CCD Blade Mount, .01W, 140K

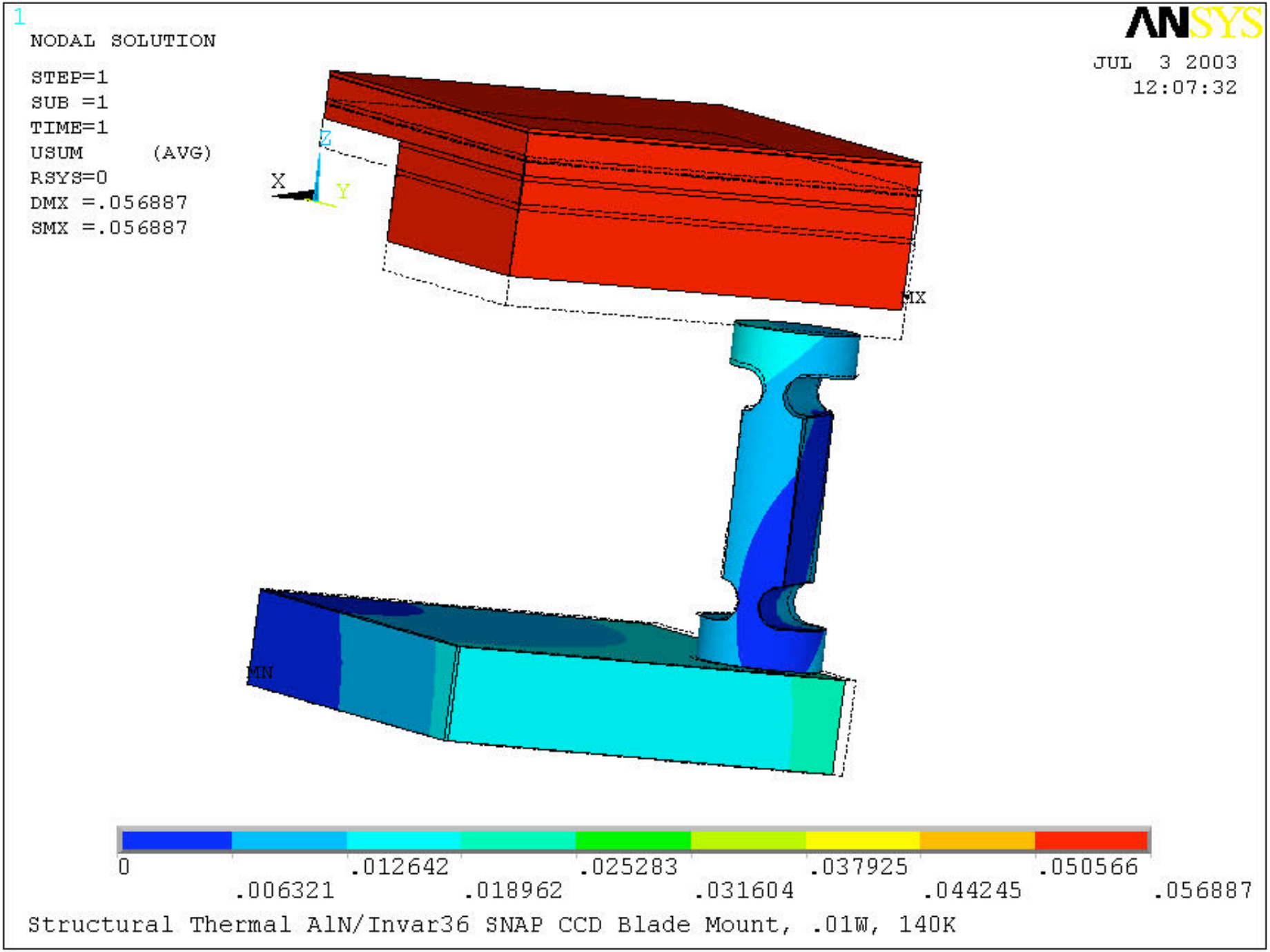
1
NODAL SOLUTION
STEP=1
SUB =1
TIME=1
USUM (AVG)
RSYS=0
DMX =.056887
SMX =.056887
ANSYS
JUL 3 2003
12:07:32
Z
X
Y
MX
MN
0
.006321
.012642
.018962
.025283
.031604
.037925
.044245
.050566
.056887
Structural Thermal AlN/Invar36 SNAP CCD Blade Mount, .01W, 140K