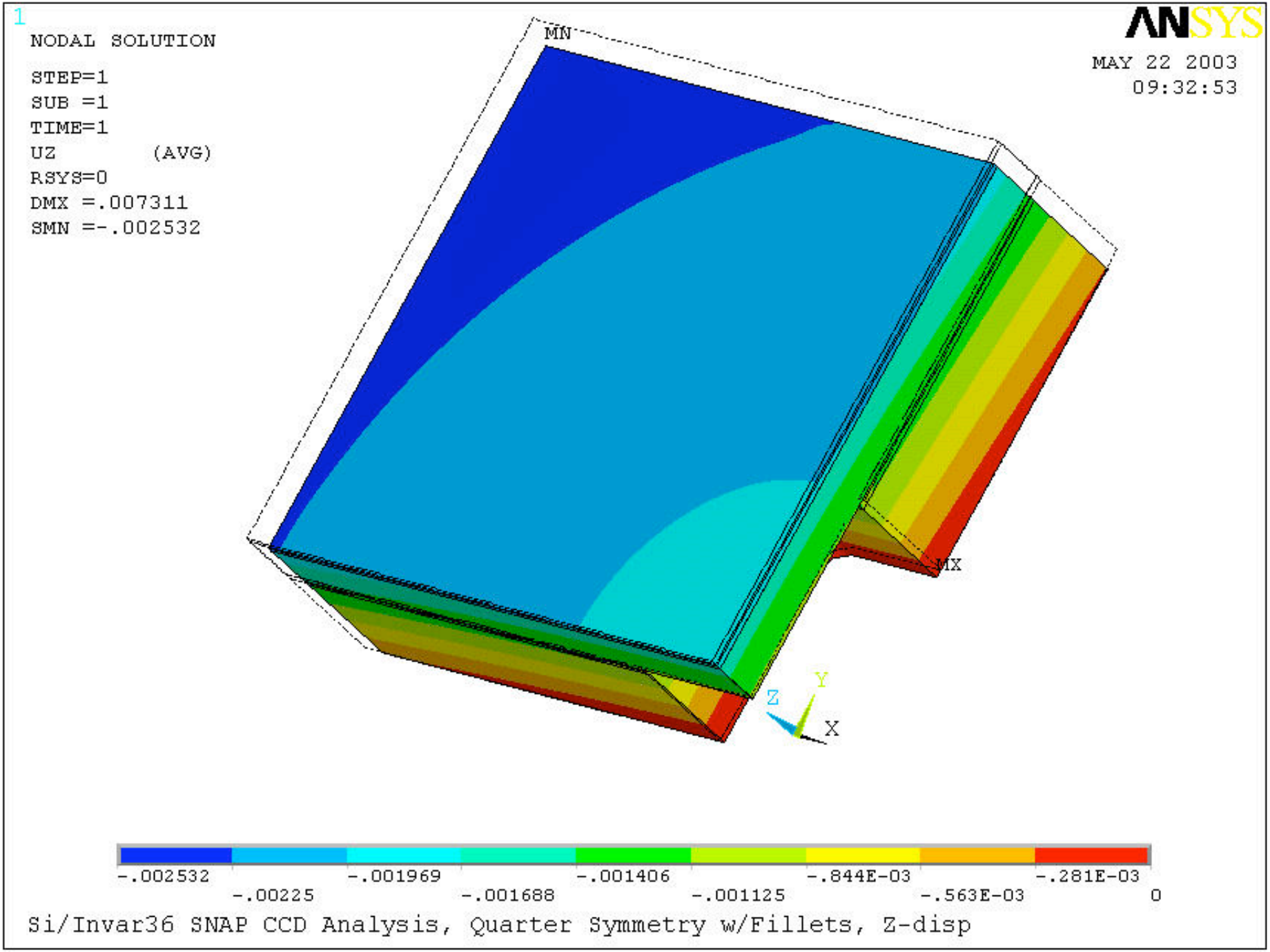
1
NODAL SOLUTION
STEP=1
SUB =1
TIME=1
UZ (AVG)
RSYS=0
DMX =.007311
SMN =-.002532
ANSYS
MAY 22 2003
09:32:53
MN
MX
Z
Y
X
-.002532
-.00225
-.001969
-.001688
-.001406
-.001125
-.844E-03
-.563E-03
-.281E-03
0
Si/Invar36 SNAP CCD Analysis, Quarter Symmetry w/Fillets, Z-disp

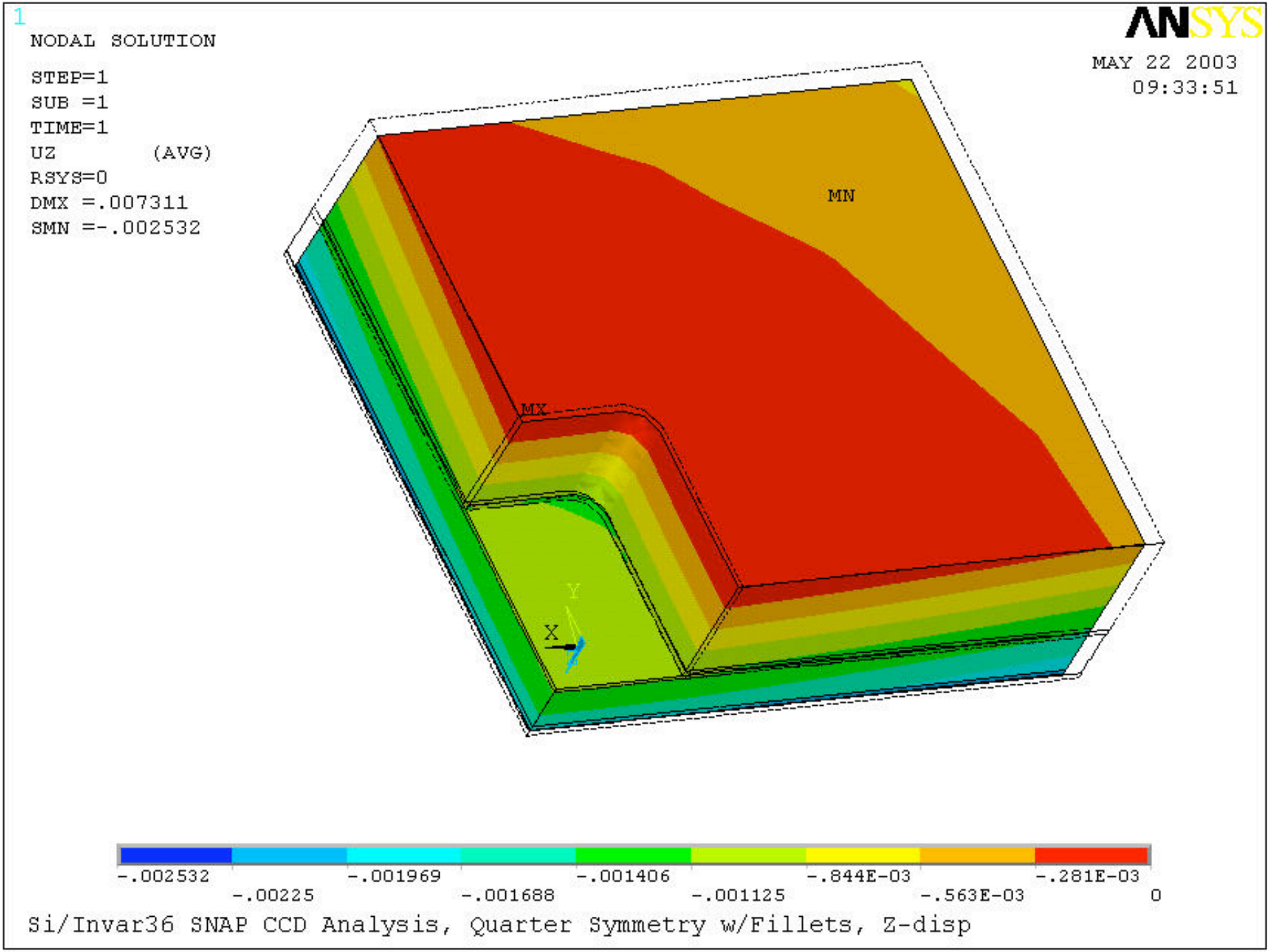
1
NODAL SOLUTION
STEP=1
SUB =1
TIME=1
UZ (AVG)
RSYS=0
DMX =.007311
SMN =-.002532
ANSYS
MAY 22 2003
09:33:51
MN
MX
Y
X
-.002532
-.00225
-.001969
-.001688
-.001406
-.001125
-.844E-03
-.563E-03
-.281E-03
0
Si/Invar36 SNAP CCD Analysis, Quarter Symmetry w/Fillets, Z-disp

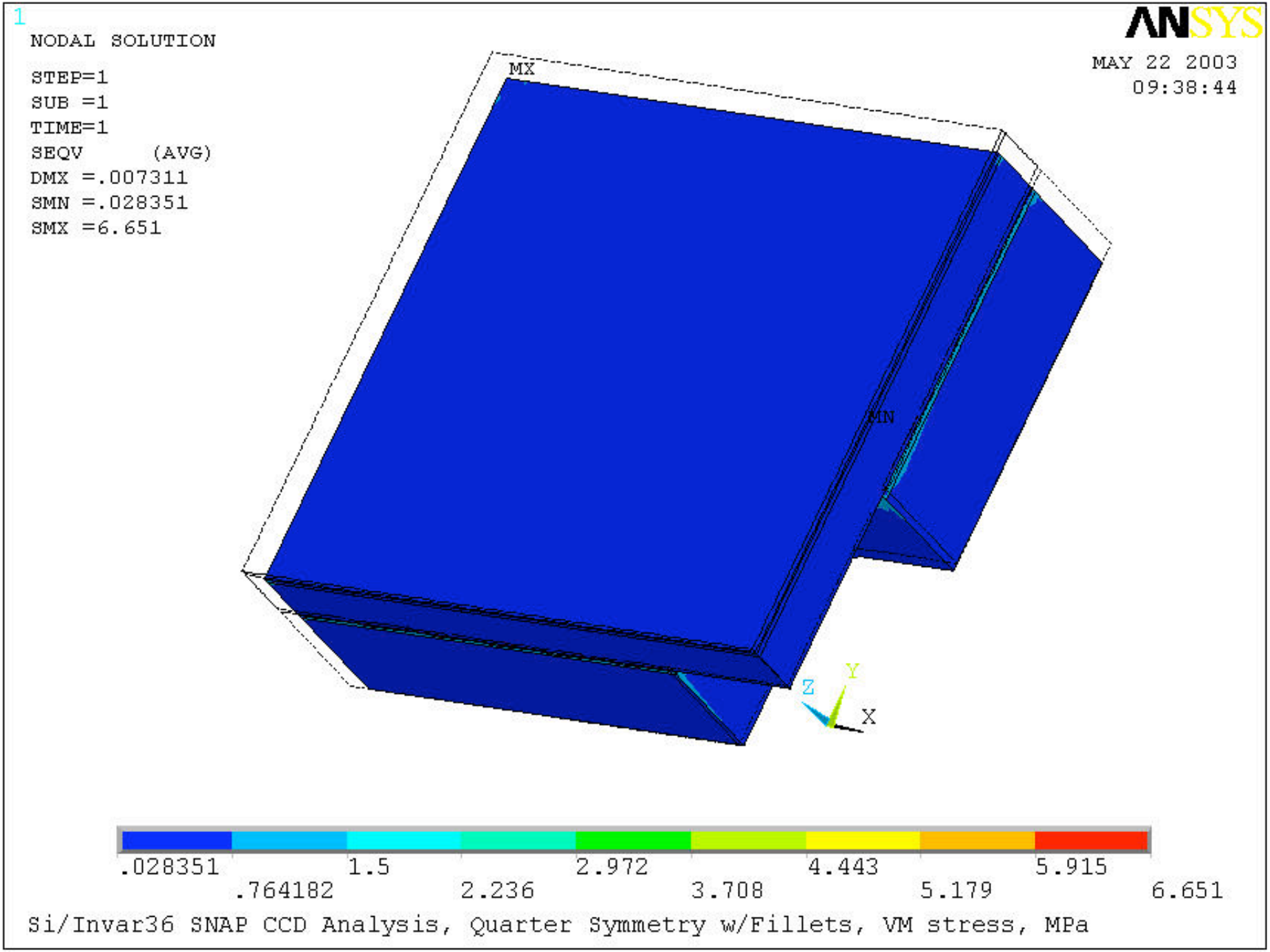
1
NODAL SOLUTION
STEP=1
SUB =1
TIME=1
SEQV (AVG)
DMX =.007311
SMN =.028351
SMX =6.651
ANSYS
MAY 22 2003
09:38:44
MX
MN
Z
Y
X
.028351
.764182
1.5
2.236
2.972
3.708
4.443
5.179
5.915
6.651
Si/Invar36 SNAP CCD Analysis, Quarter Symmetry w/Fillets, VM stress, MPa

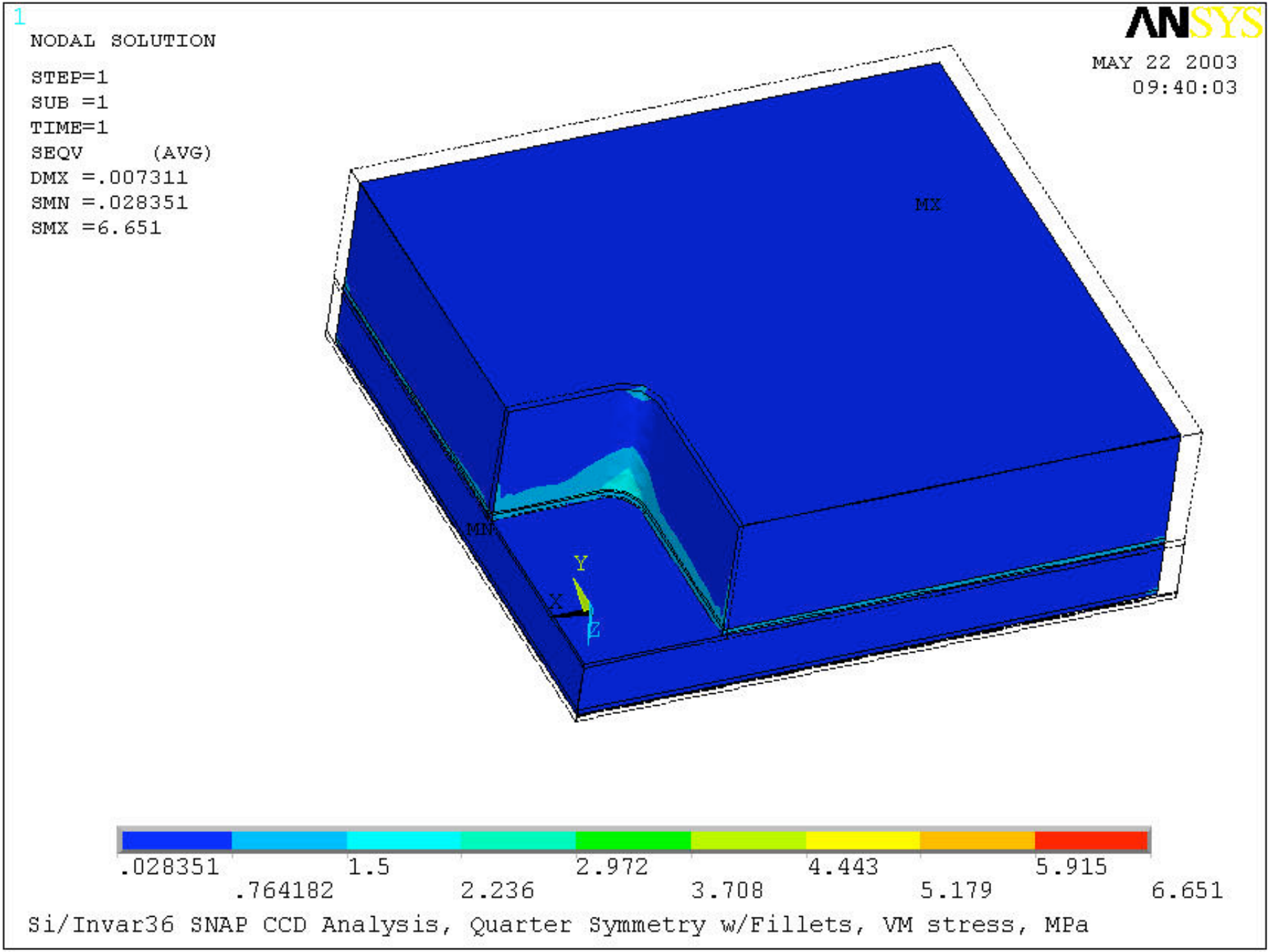
1
NODAL SOLUTION
STEP=1
SUB =1
TIME=1
SEQV (AVG)
DMX =.007311
SMN =.028351
SMX =6.651
ANSYS
MAY 22 2003
09:40:03
MX
MN
Y
X
Z
.028351
.764182
1.5
2.236
2.972
3.708
4.443
5.179
5.915
6.651
Si/Invar36 SNAP CCD Analysis, Quarter Symmetry w/Fillets, VM stress, MPa

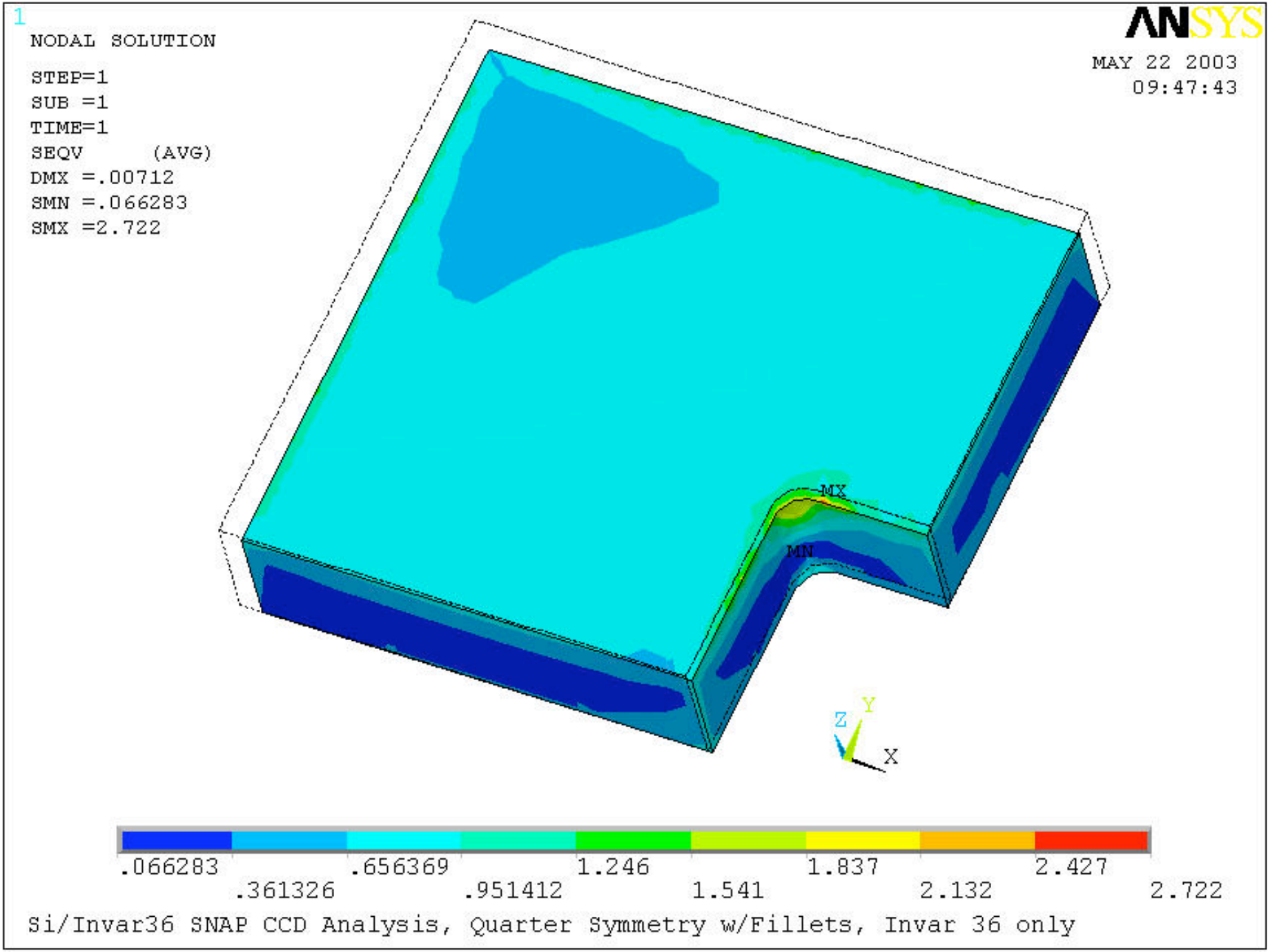
1
NODAL SOLUTION
STEP=1
SUB =1
TIME=1
SEQV (AVG)
DMX =.00712
SMN =.066283
SMX =2.722
ANSYS
MAY 22 2003
09:47:43
MX
MN
Z
Y
X
.066283
.361326
.656369
.951412
1.246
1.541
1.837
2.132
2.427
2.722
Si/Invar36 SNAP CCD Analysis, Quarter Symmetry w/Fillets, Invar 36 only

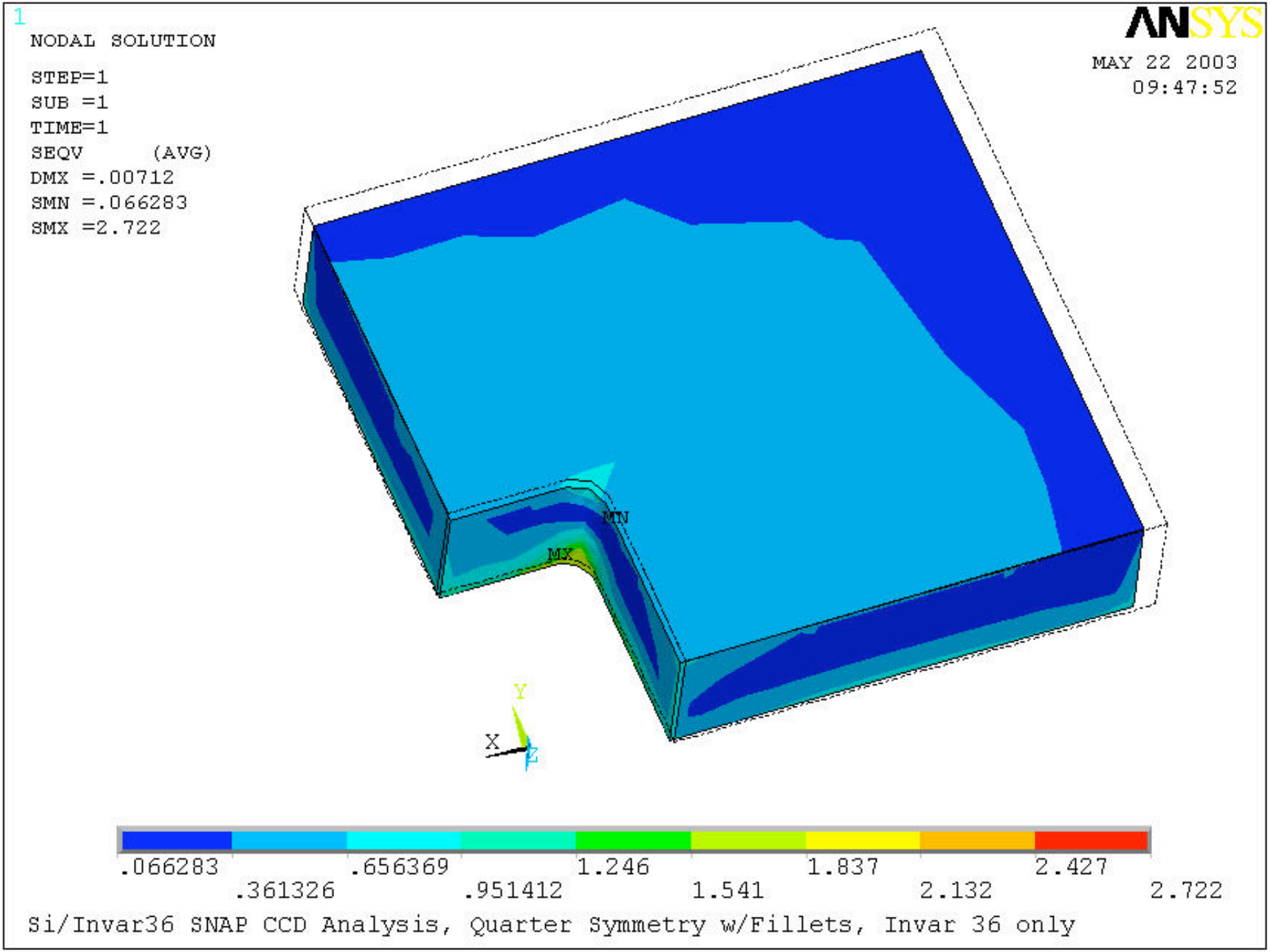
1
NODAL SOLUTION
STEP=1
SUB =1
TIME=1
SEQV (AVG)
DMX =.00712
SMN =.066283
SMX =2.722
ANSYS
MAY 22 2003
09:47:52
MN
MX
Y
X
Z
.066283
.361326
.656369
.951412
1.246
1.541
1.837
2.132
2.427
2.722
Si/Invar36 SNAP CCD Analysis, Quarter Symmetry w/Fillets, Invar 36 only

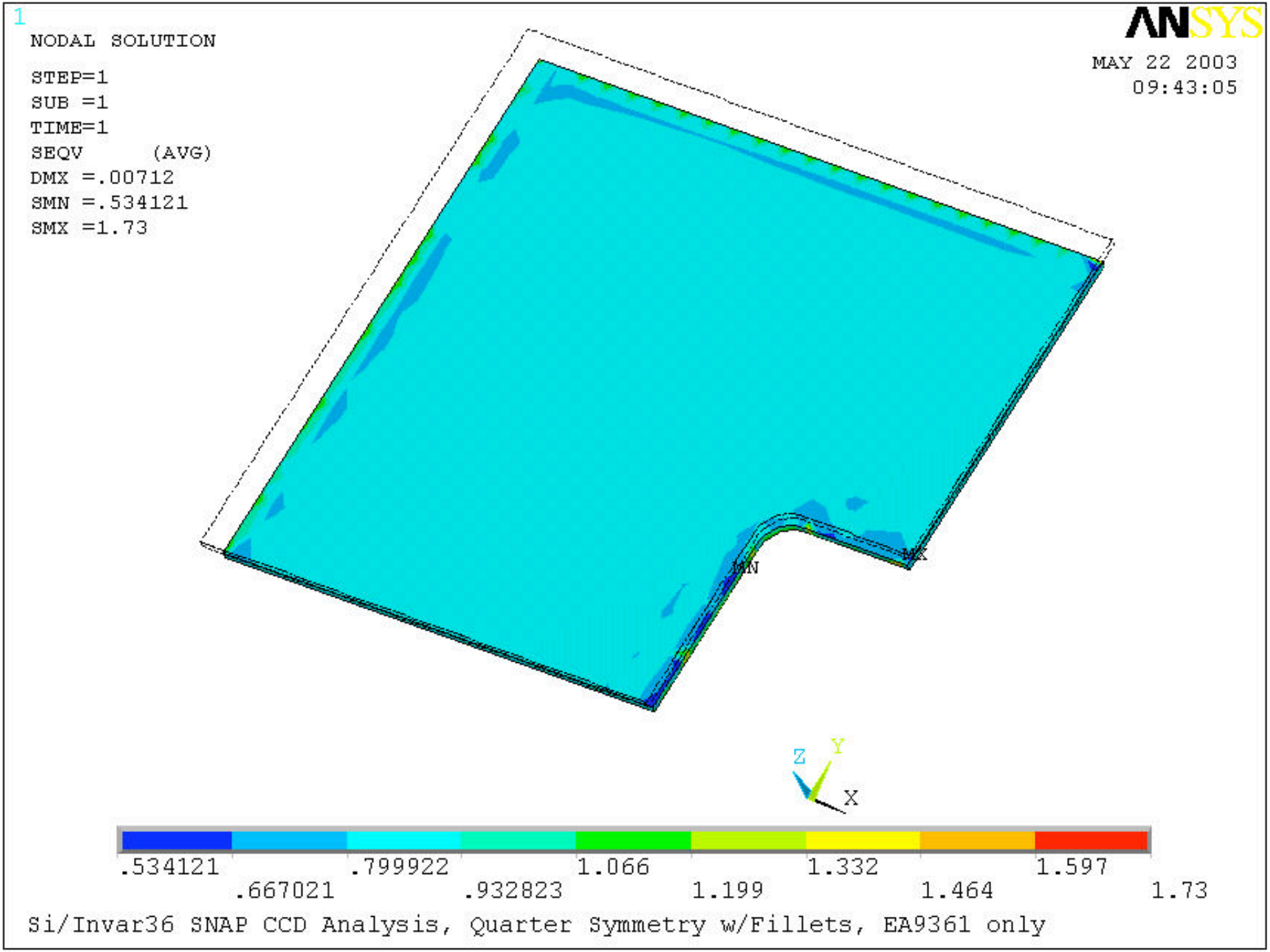
1
NODAL SOLUTION
STEP=1
SUB =1
TIME=1
SEQV (AVG)
DMX =.00712
SMN =.534121
SMX =1.73
ANSYS
MAY 22 2003
09:43:05
MN
MX
Z
Y
X
.534121
.667021
.799922
.932823
1.066
1.199
1.332
1.464
1.597
1.73
Si/Invar36 SNAP CCD Analysis, Quarter Symmetry w/Fillets, EA9361 only

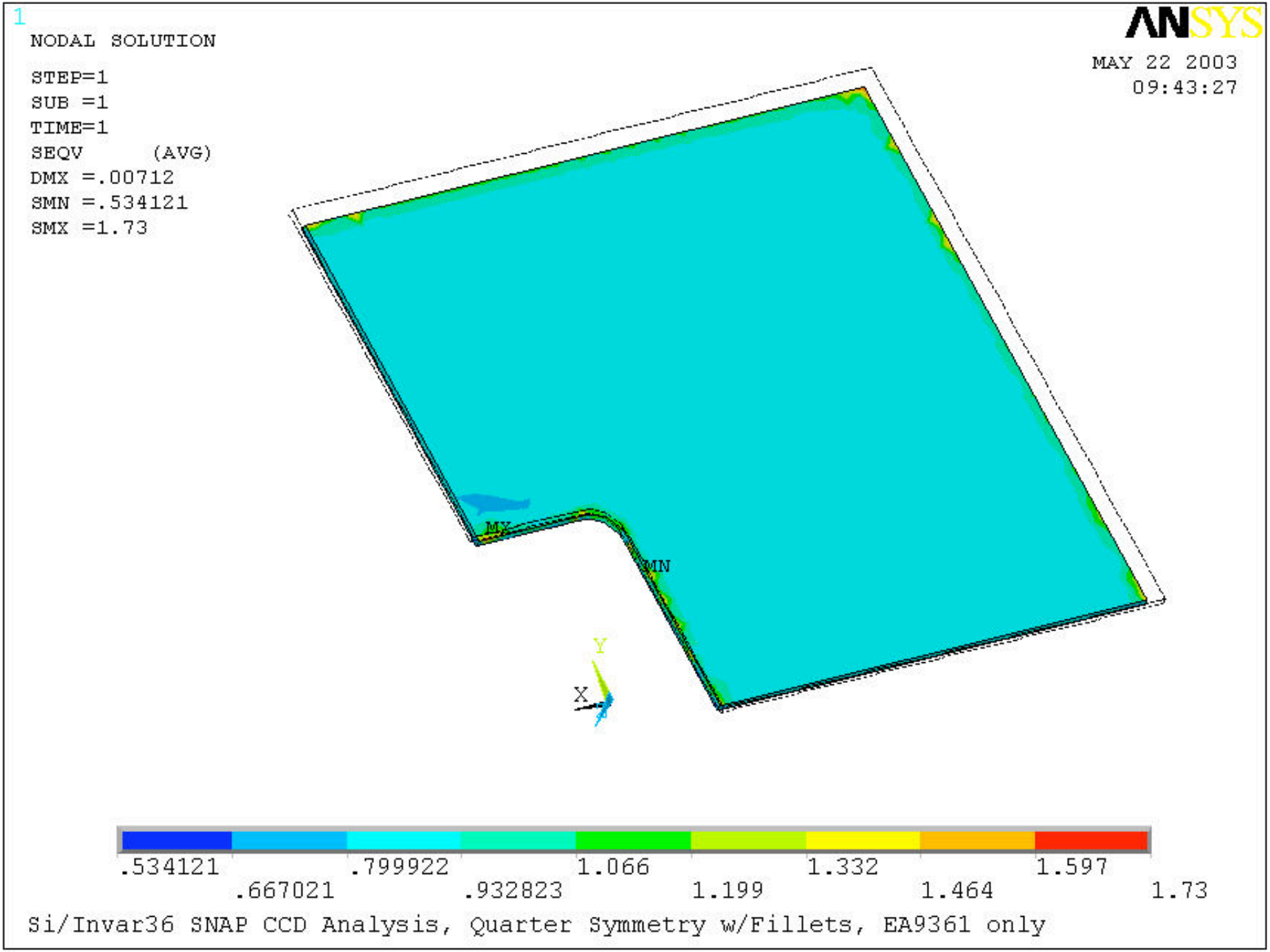
1
NODAL SOLUTION
STEP=1
SUB =1
TIME=1
SEQV (AVG)
DMX =.00712
SMN =.534121
SMX =1.73
ANSYS
MAY 22 2003
09:43:27
MX
MN
Y
X
.534121
.667021
.799922
.932823
1.066
1.199
1.332
1.464
1.597
1.73
Si/Invar36 SNAP CCD Analysis, Quarter Symmetry w/Fillets, EA9361 only

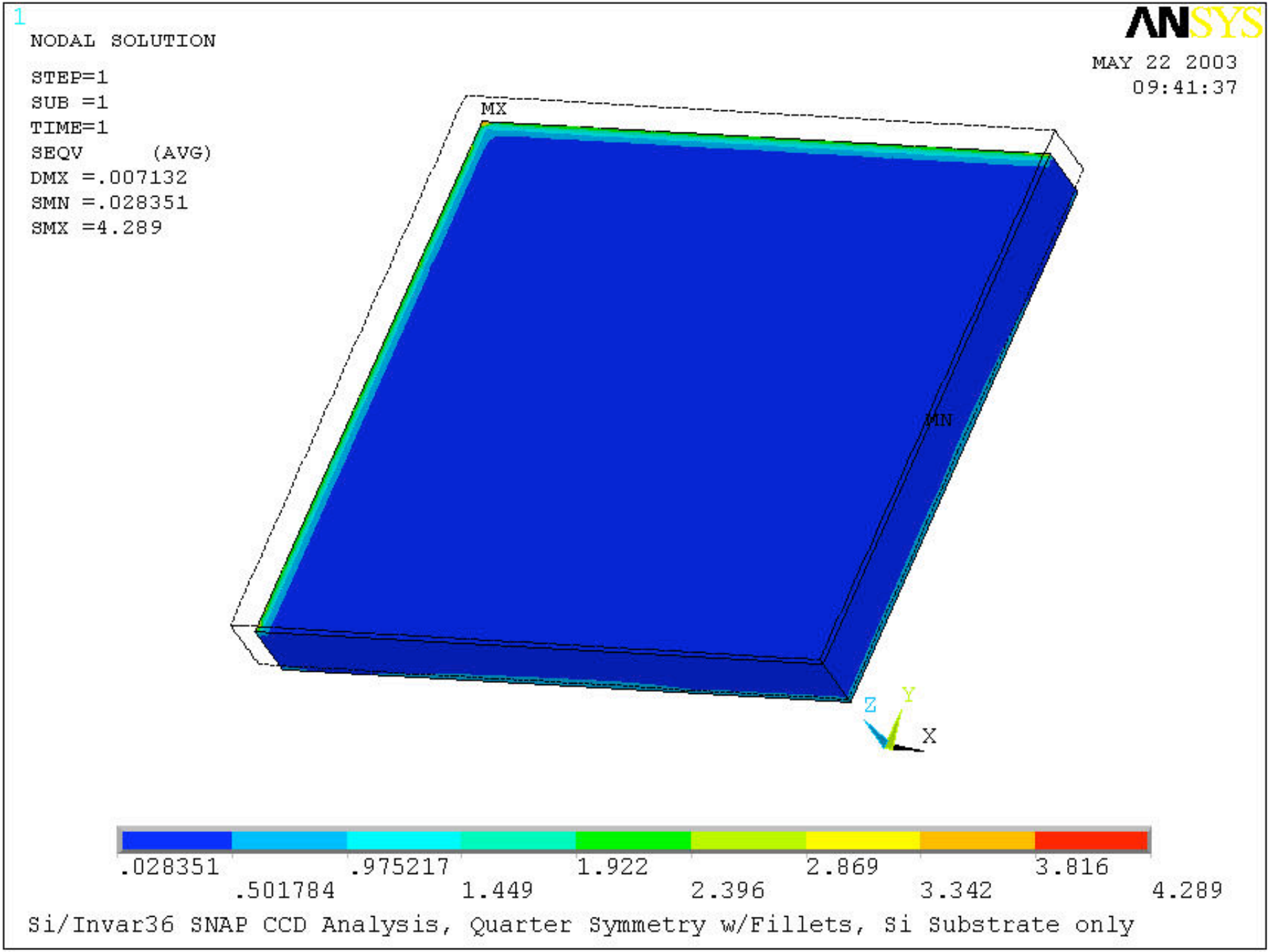
1
NODAL SOLUTION
STEP=1
SUB =1
TIME=1
SEQV (AVG)
DMX =.007132
SMN =.028351
SMX =4.289
ANSYS
MAY 22 2003
09:41:37
MX
MN
Z
Y
X
.028351
.501784
.975217
1.449
1.922
2.396
2.869
3.342
3.816
4.289
Si/Invar36 SNAP CCD Analysis, Quarter Symmetry w/Fillets, Si Substrate only

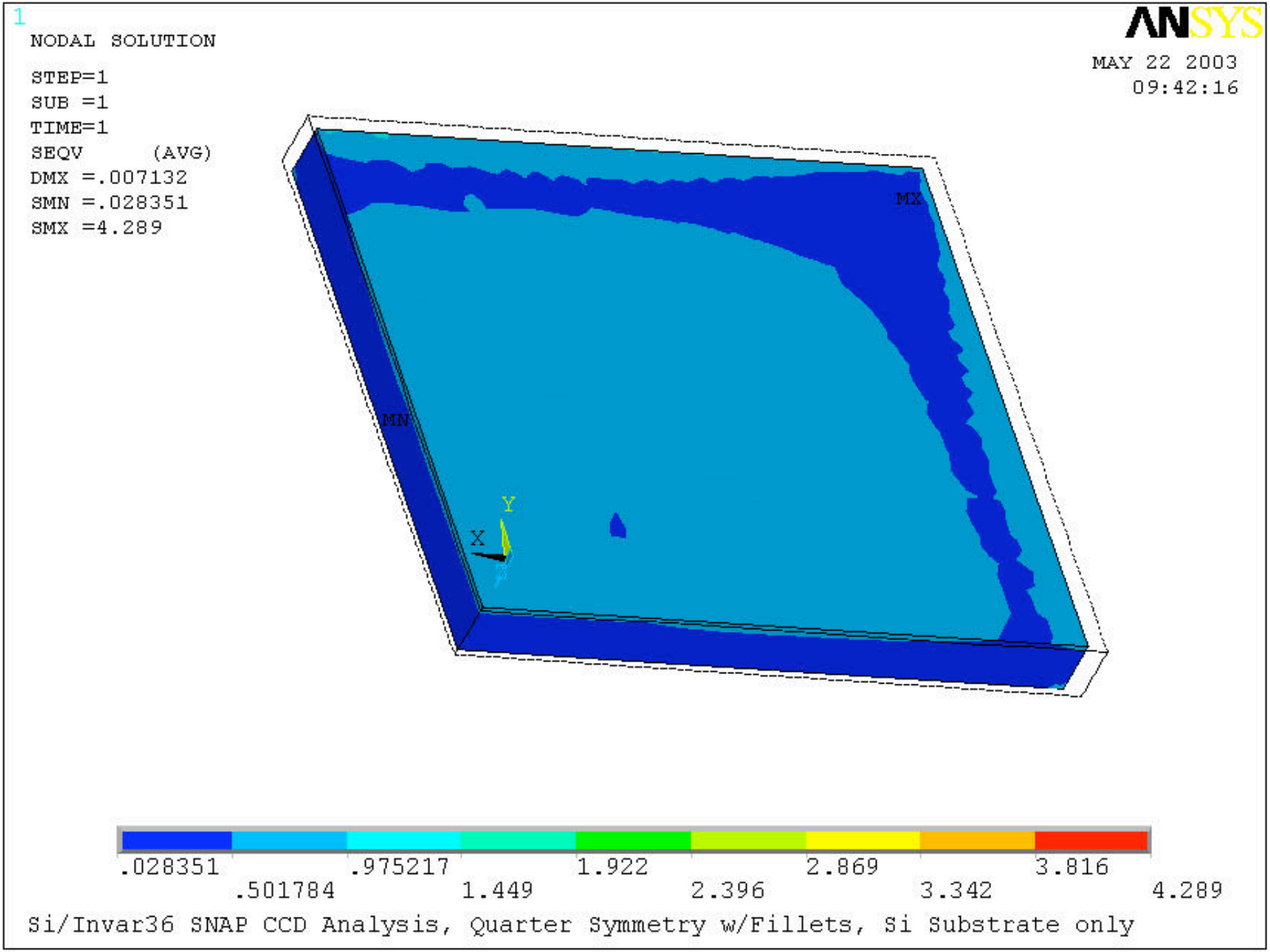
1
NODAL SOLUTION
STEP=1
SUB =1
TIME=1
SEQV (AVG)
DMX =.007132
SMN =.028351
SMX =4.289
ANSYS
MAY 22 2003
09:42:16
MX
MN
Y
X
.028351
.501784
.975217
1.449
1.922
2.396
2.869
3.342
3.816
4.289
Si/Invar36 SNAP CCD Analysis, Quarter Symmetry w/Fillets, Si Substrate only

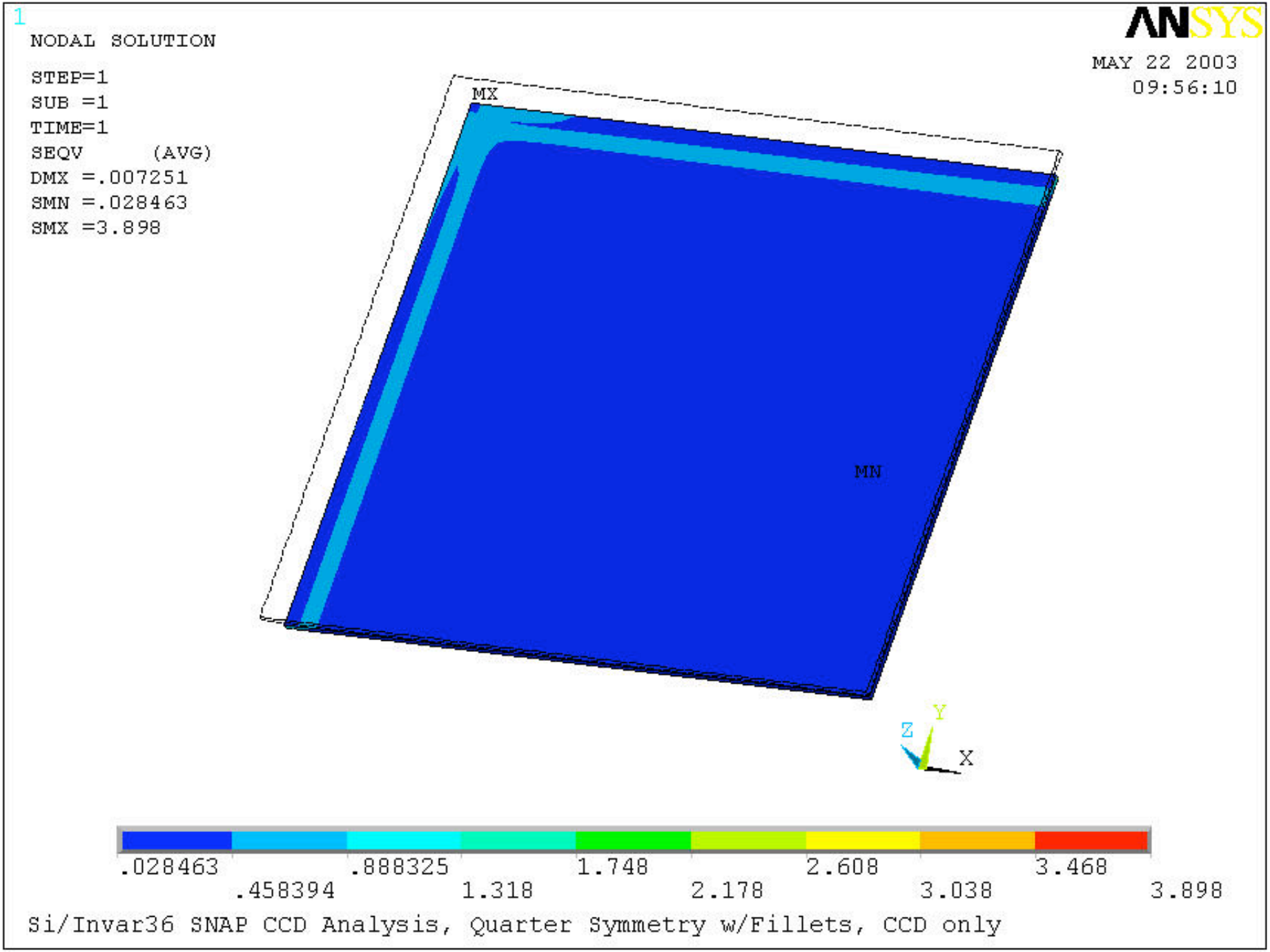
1
NODAL SOLUTION
STEP=1
SUB =1
TIME=1
SEQV (AVG)
DMX =.007251
SMN =.028463
SMX =3.898
ANSYS
MAY 22 2003
09:56:10
MX
MN
Z
Y
X
.028463
.458394
.888325
1.318
1.748
2.178
2.608
3.038
3.468
3.898
Si/Invar36 SNAP CCD Analysis, Quarter Symmetry w/Fillets, CCD only

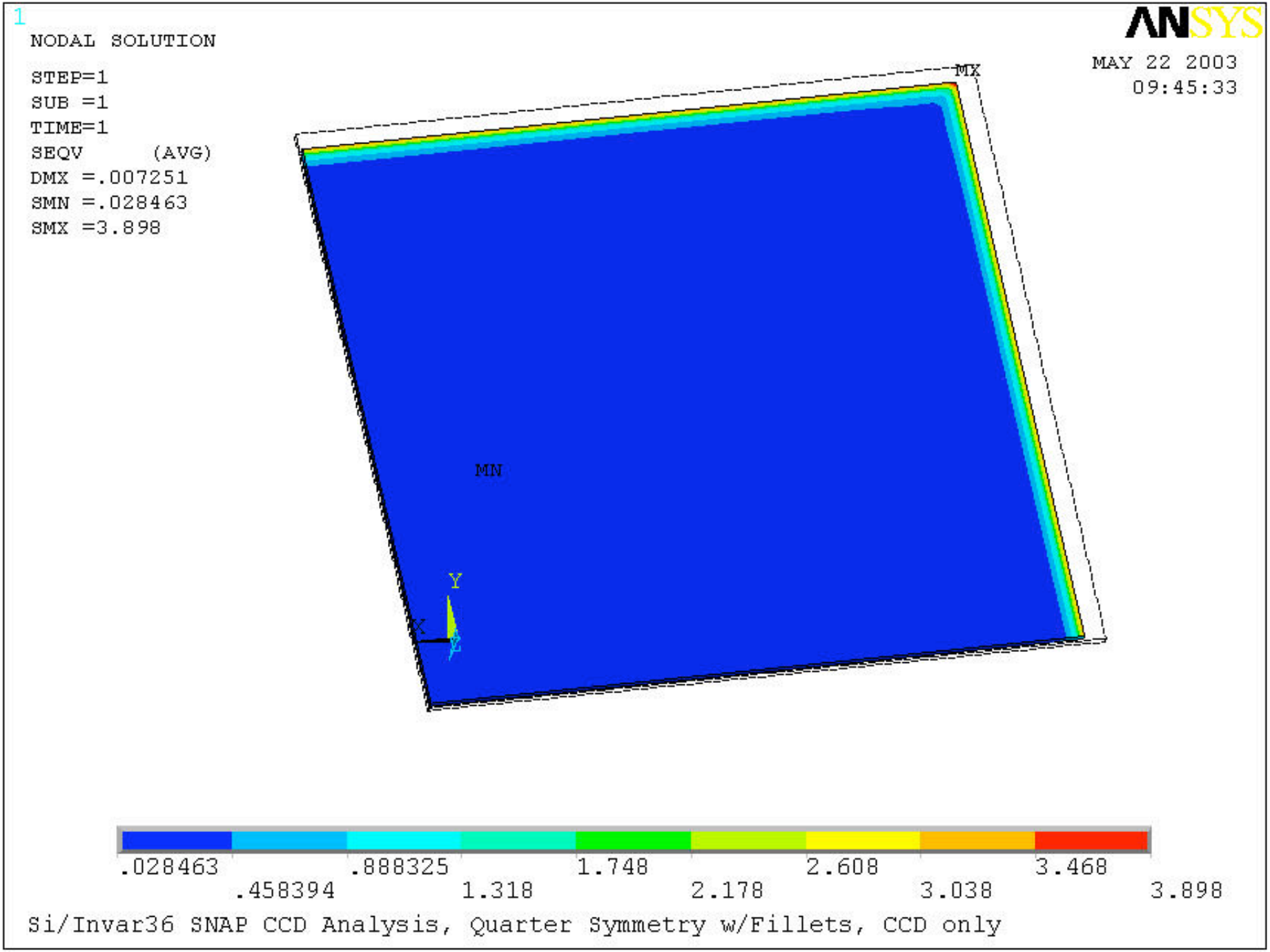
1
NODAL SOLUTION
STEP=1
SUB =1
TIME=1
SEQV (AVG)
DMX =.007251
SMN =.028463
SMX =3.898
ANSYS
MAY 22 2003
09:45:33
MX
MN
Y
X
Z
.028463
.458394
.888325
1.318
1.748
2.178
2.608
3.038
3.468
3.898
Si/Invar36 SNAP CCD Analysis, Quarter Symmetry w/Fillets, CCD only

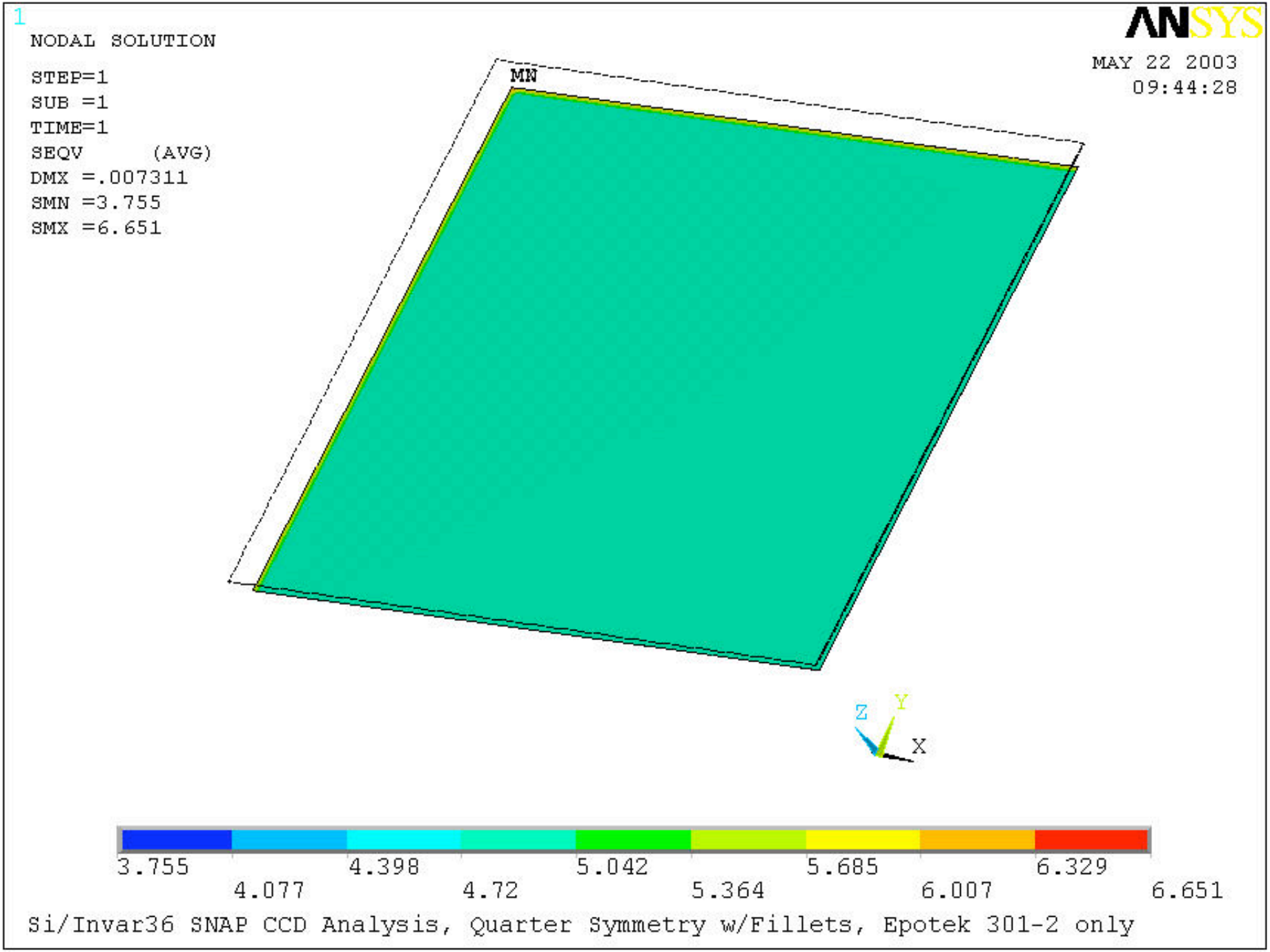
1
NODAL SOLUTION
STEP=1
SUB =1
TIME=1
SEQV (AVG)
DMX =.007311
SMN =3.755
SMX =6.651
ANSYS
MAY 22 2003
09:44:28
MN
Z
Y
X
3.755
4.077
4.398
4.72
5.042
5.364
5.685
6.007
6.329
6.651
Si/Invar36 SNAP CCD Analysis, Quarter Symmetry w/Fillets, Epotek 301-2 only

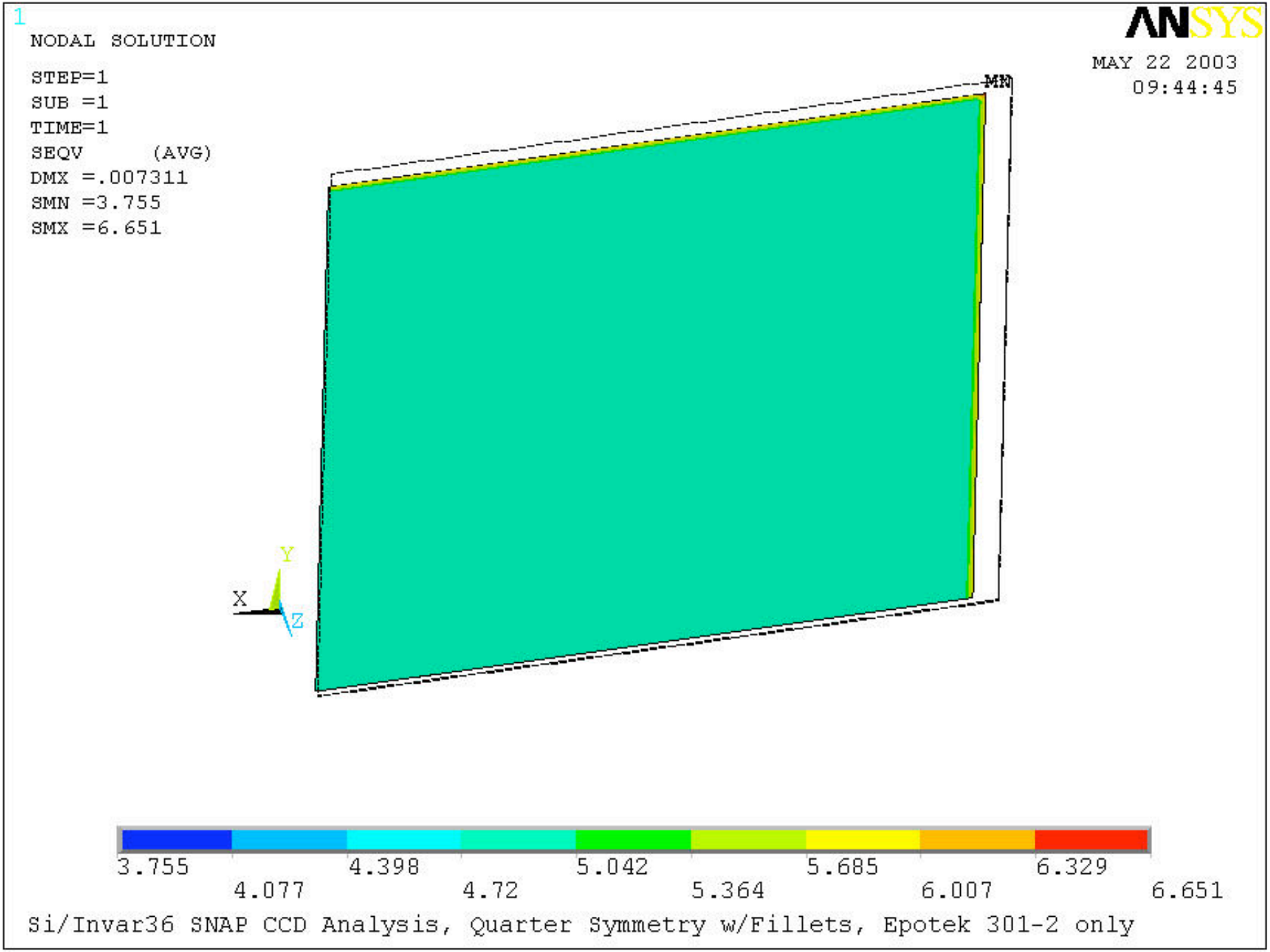
1
NODAL SOLUTION
STEP=1
SUB =1
TIME=1
SEQV (AVG)
DMX =.007311
SMN =3.755
SMX =6.651
ANSYS
MAY 22 2003
09:44:45
MN
Y
X
Z
3.755
4.077
4.398
4.72
5.042
5.364
5.685
6.007
6.329
6.651
Si/Invar36 SNAP CCD Analysis, Quarter Symmetry w/Fillets, Epotek 301-2 only

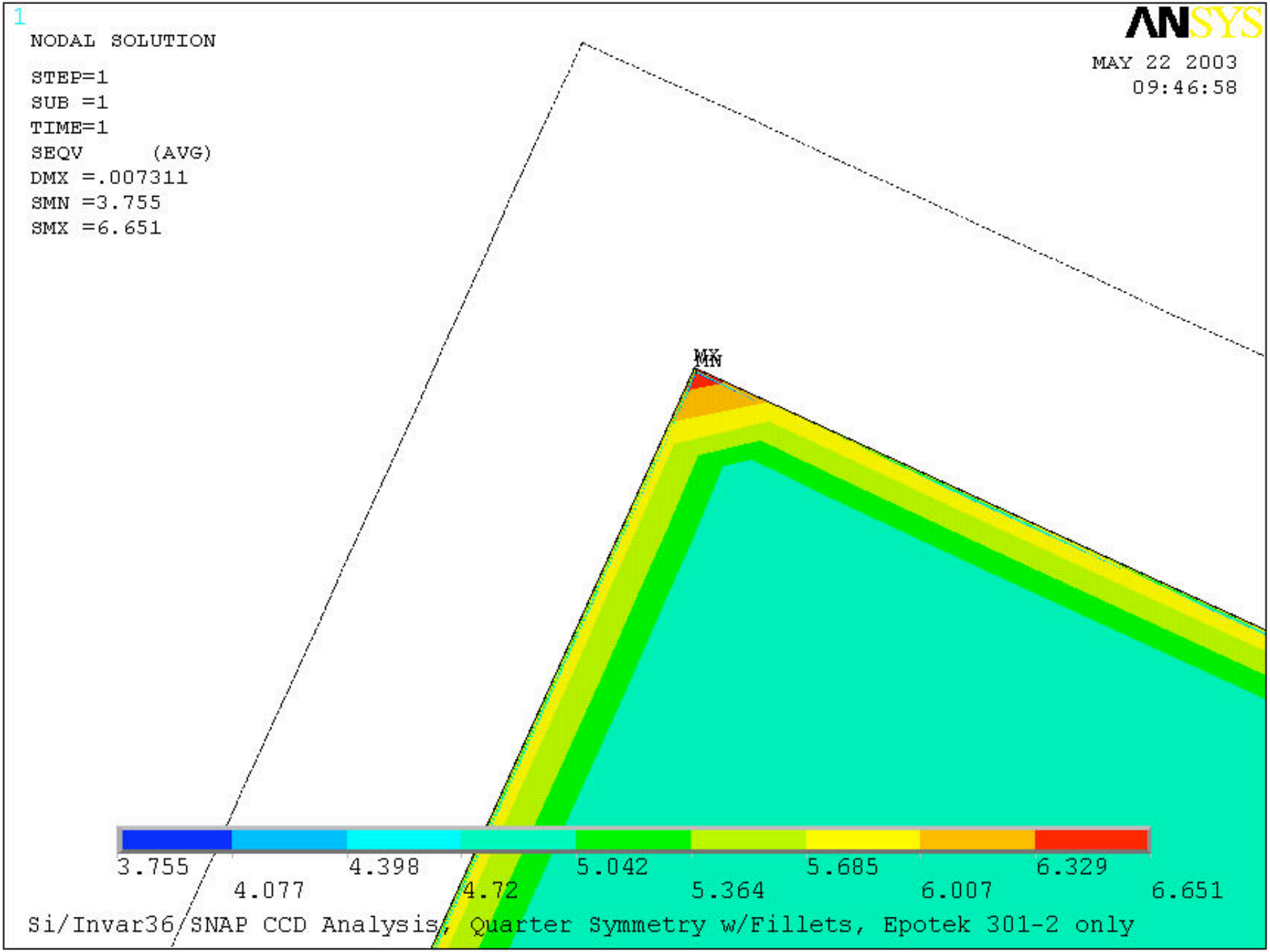
1
NODAL SOLUTION
STEP=1
SUB =1
TIME=1
SEQV (AVG)
DMX =.007311
SMN =3.755
SMX =6.651
ANSYS
MAY 22 2003
09:46:58
MX
MN
3.755
4.077
4.398
4.72
5.042
5.364
5.685
6.007
6.329
6.651
Si/Invar36/SNAP CCD Analysis, Quarter Symmetry w/Fillets, Epotek 301-2 only