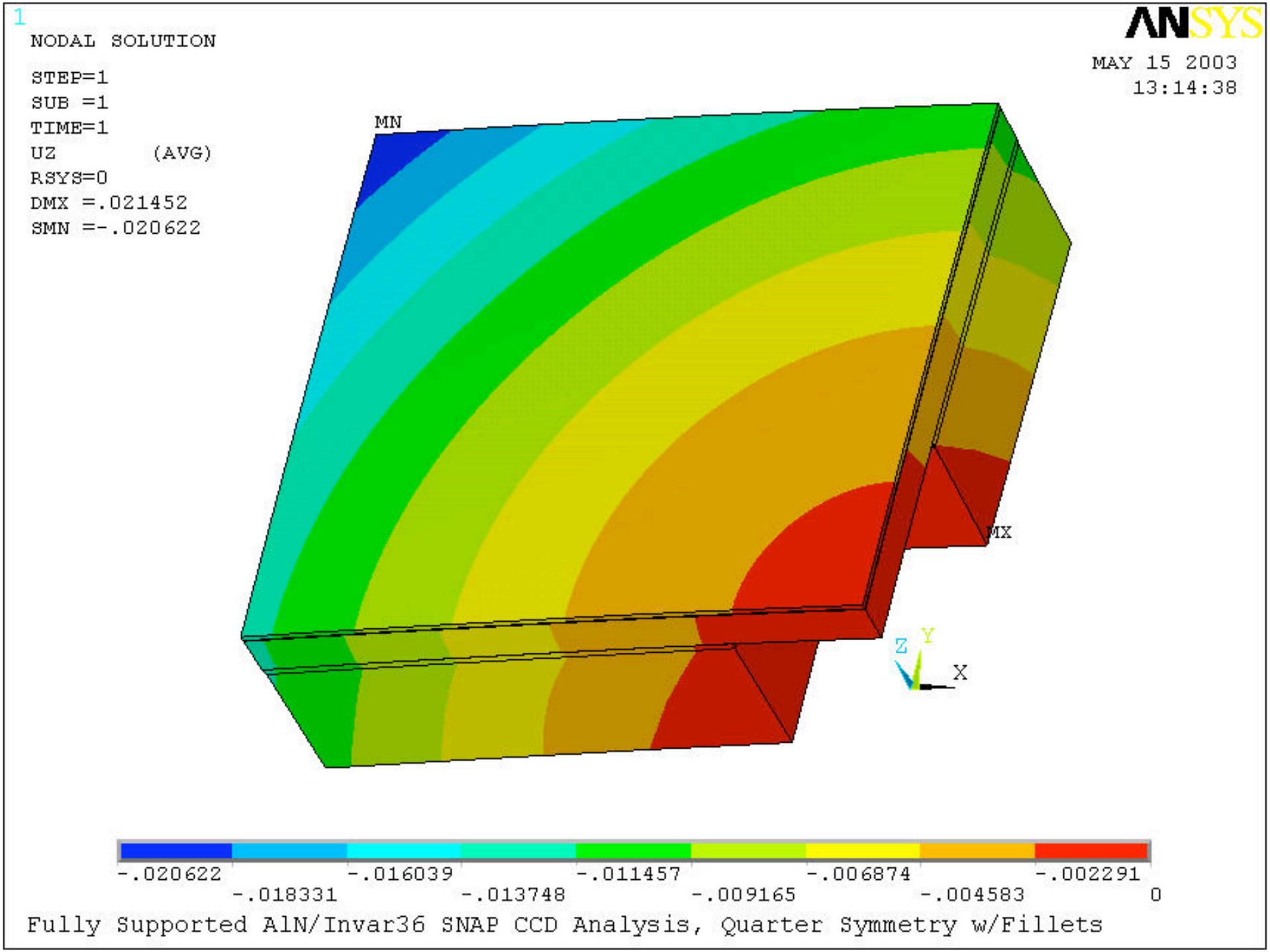
1
NODAL SOLUTION
STEP=1
SUB =1
TIME=1
UZ (AVG)
RSYS=0
DMX =.021452
SMN =-.020622
ANSYS
MAY 15 2003
13:14:38
MN
MX
Z
Y
X
-.020622
-.018331
-.016039
-.013748
-.011457
-.009165
-.006874
-.004583
-.002291
0
Fully Supported AlN/Invar36 SNAP CCD Analysis, Quarter Symmetry w/Fillets

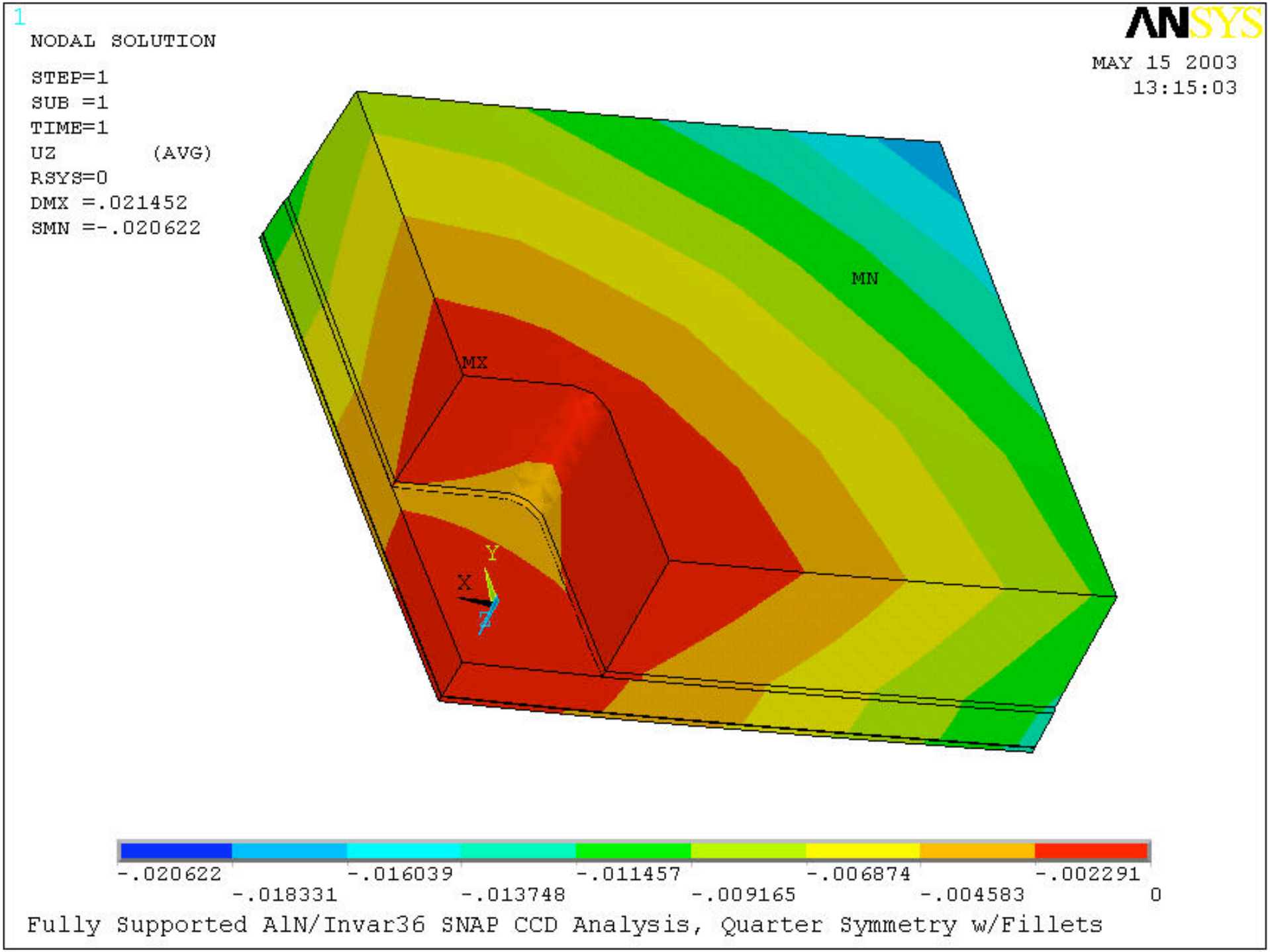
1
NODAL SOLUTION
STEP=1
SUB =1
TIME=1
UZ (AVG)
RSYS=0
DMX =.021452
SMN =-.020622
ANSYS
MAY 15 2003
13:15:03
MN
MX
Y
X
Z
-.020622
-.018331
-.016039
-.013748
-.011457
-.009165
-.006874
-.004583
-.002291
0
Fully Supported AlN/Invar36 SNAP CCD Analysis, Quarter Symmetry w/Fillets

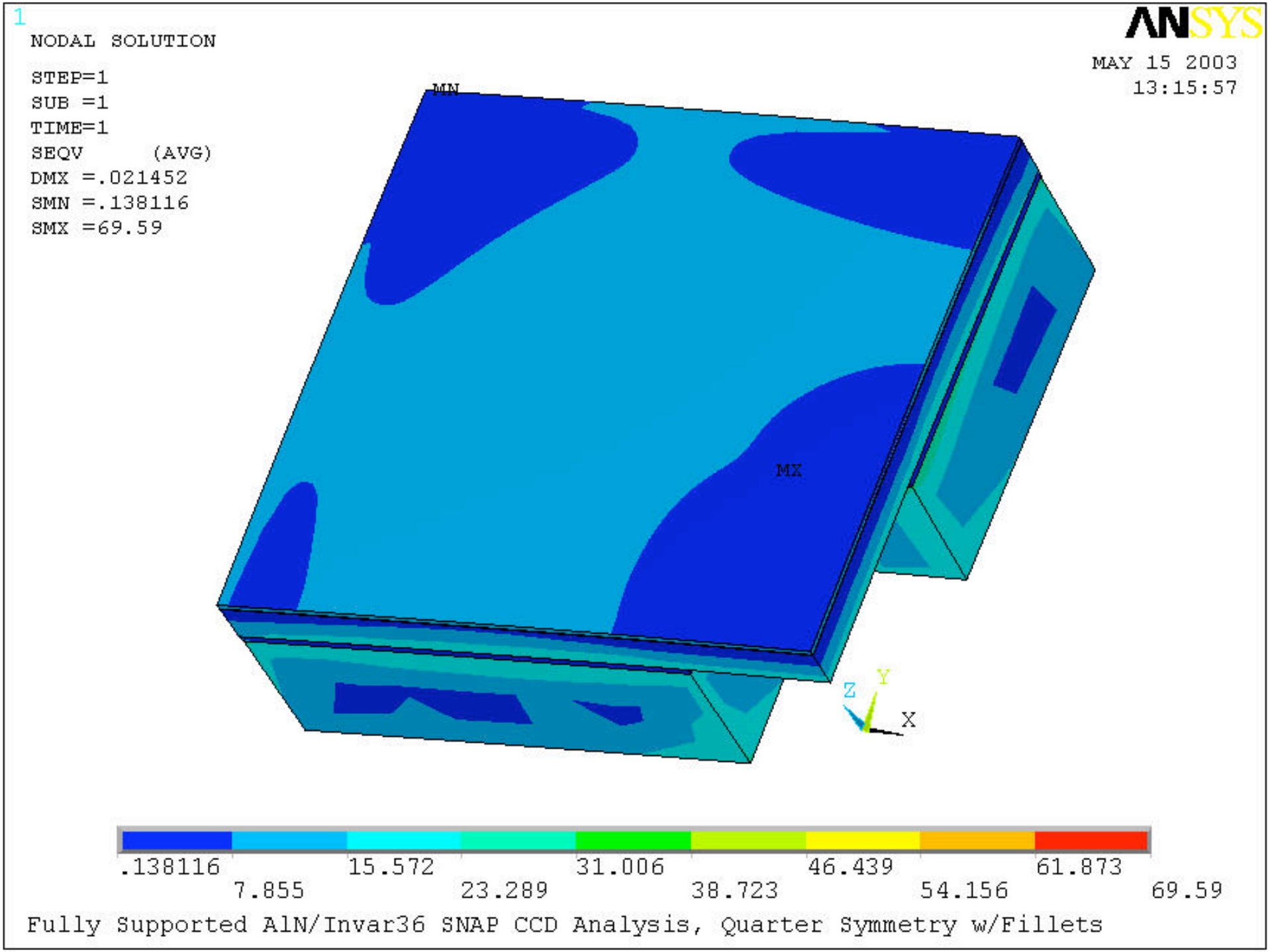
1
NODAL SOLUTION
STEP=1
SUB =1
TIME=1
SEQV (AVG)
DMX =.021452
SMN =.138116
SMX =69.59
ANSYS
MAY 15 2003
13:15:57
MN
MX
Z
Y
X
.138116
7.855
15.572
23.289
31.006
38.723
46.439
54.156
61.873
69.59
Fully Supported AlN/Invar36 SNAP CCD Analysis, Quarter Symmetry w/Fillets

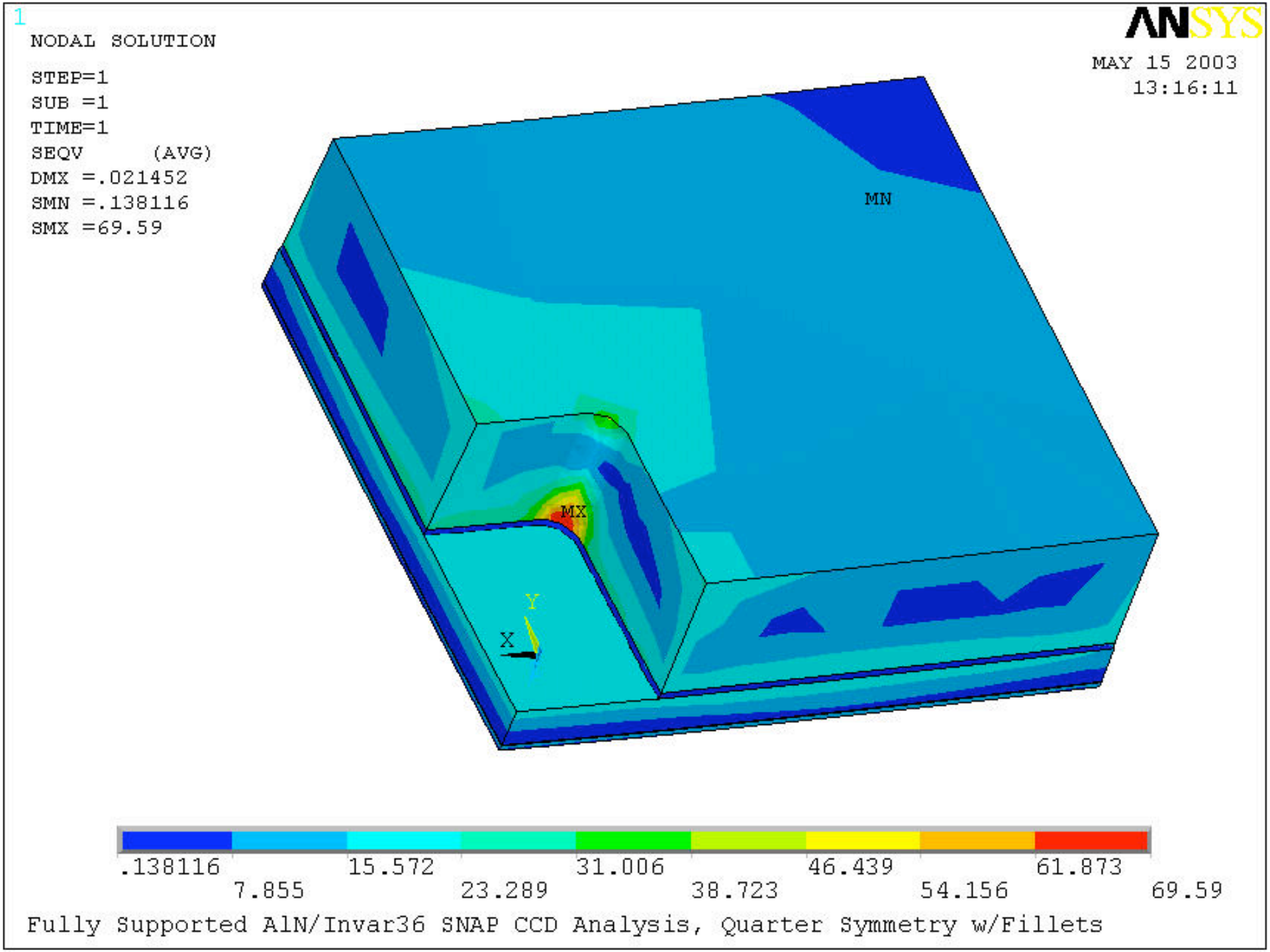
1
NODAL SOLUTION
STEP=1
SUB =1
TIME=1
SEQV (AVG)
DMX =.021452
SMN =.138116
SMX =69.59
ANSYS
MAY 15 2003
13:16:11
MN
MX
Y
X
.138116
7.855
15.572
23.289
31.006
38.723
46.439
54.156
61.873
69.59
Fully Supported AlN/Invar36 SNAP CCD Analysis, Quarter Symmetry w/Fillets

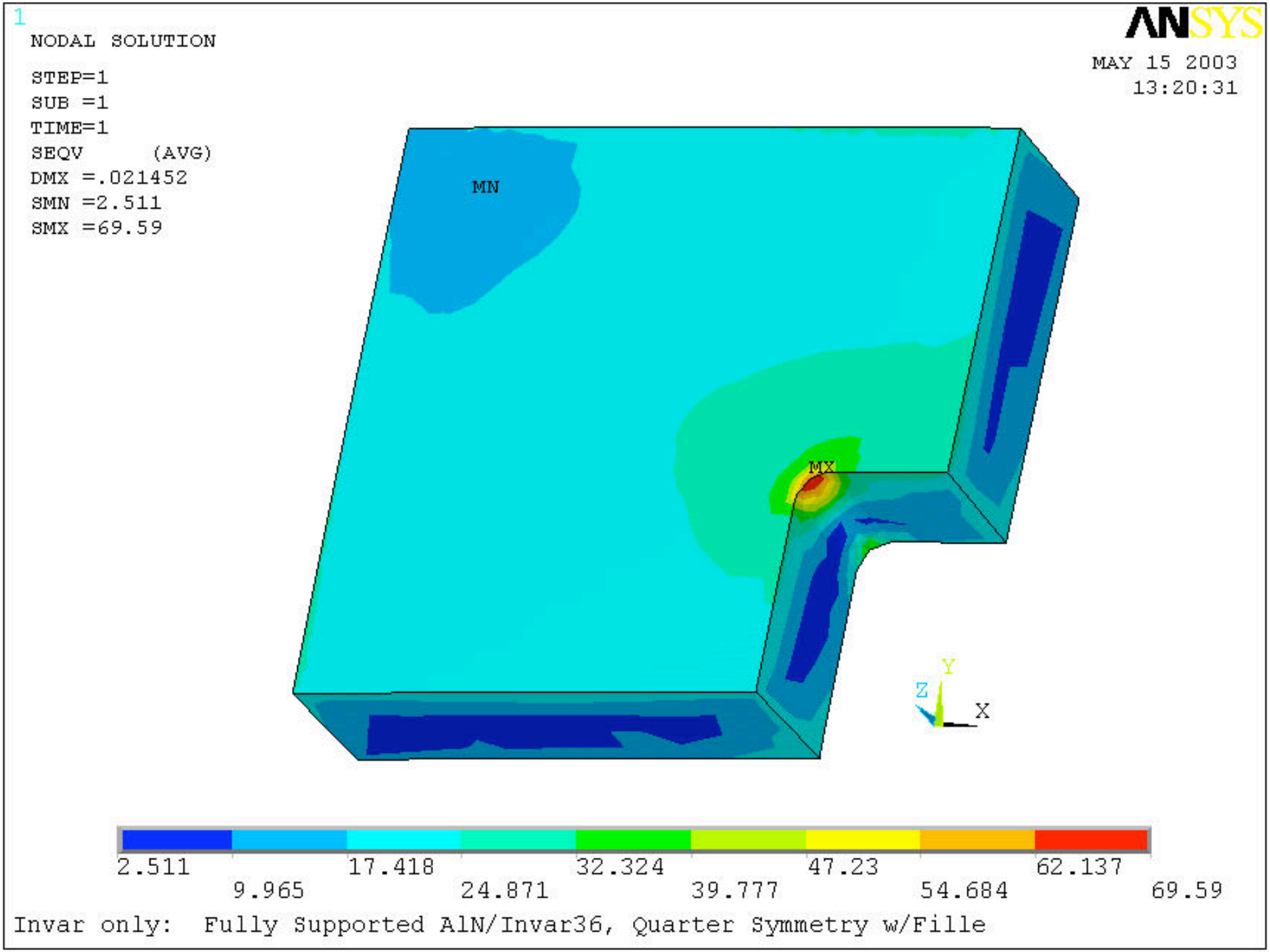
1
NODAL SOLUTION
STEP=1
SUB =1
TIME=1
SEQV (AVG)
DMX =.021452
SMN =2.511
SMX =69.59
ANSYS
MAY 15 2003
13:20:31
MN
MX
Y
Z
X
2.511
9.965
17.418
24.871
32.324
39.777
47.23
54.684
62.137
69.59
Invar only: Fully Supported AlN/Invar36, Quarter Symmetry w/Fille

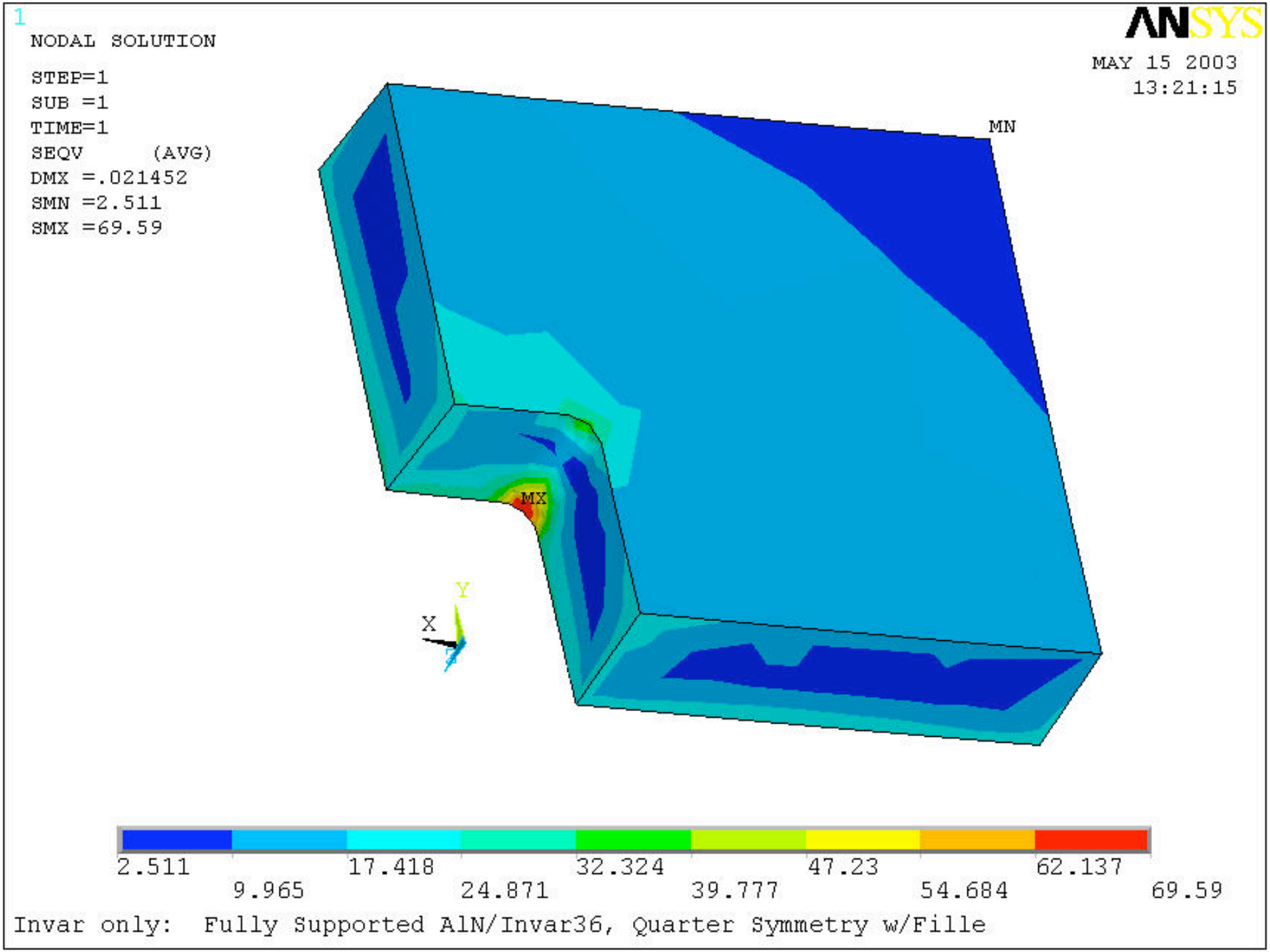
1
NODAL SOLUTION
STEP=1
SUB =1
TIME=1
SEQV (AVG)
DMX =.021452
SMN =2.511
SMX =69.59
ANSYS
MAY 15 2003
13:21:15
MN
MX
Y
X
Z
2.511
9.965
17.418
24.871
32.324
39.777
47.23
54.684
62.137
69.59
Invar only: Fully Supported AlN/Invar36, Quarter Symmetry w/Fille

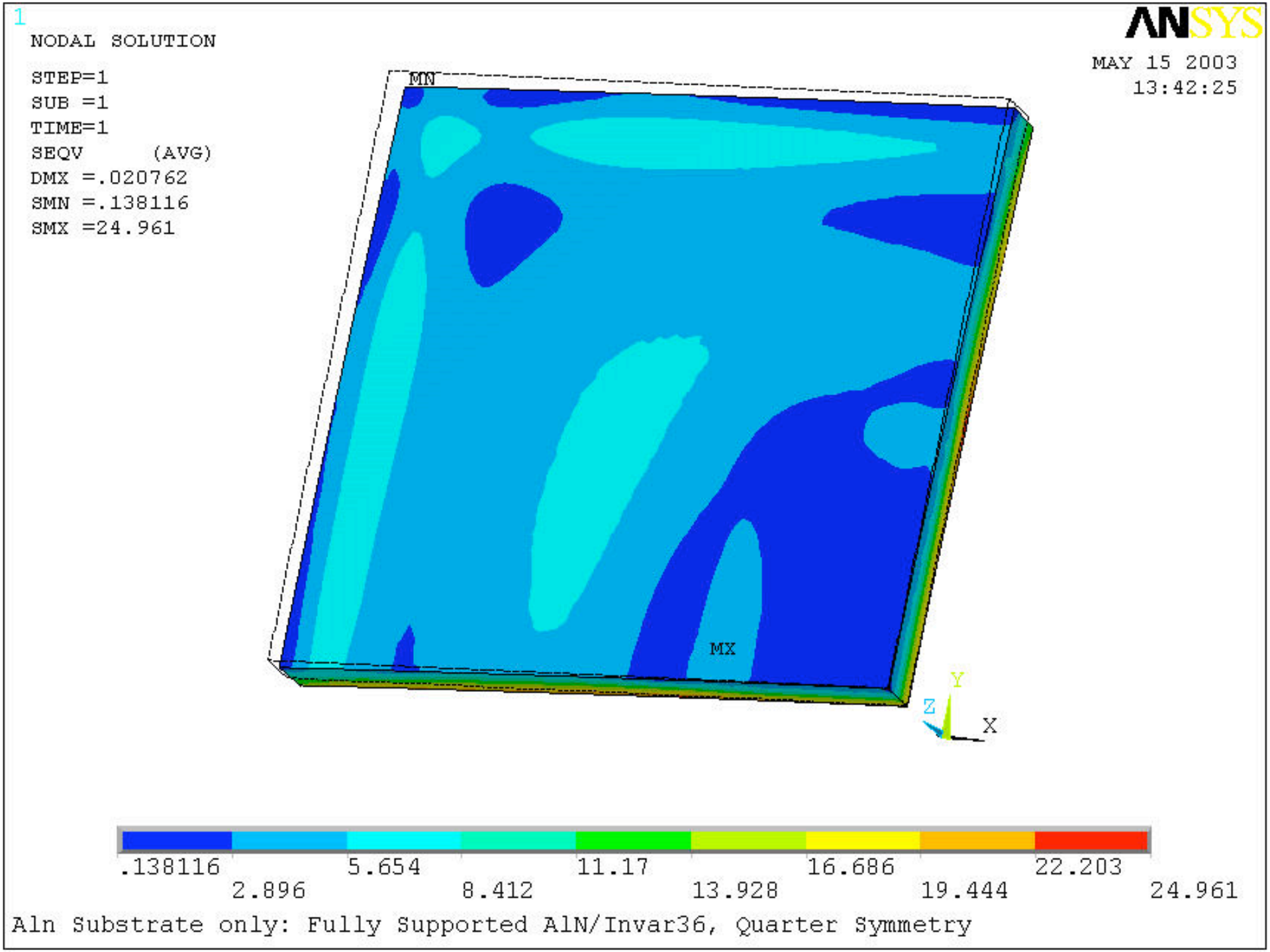
1
NODAL SOLUTION
STEP=1
SUB =1
TIME=1
SEQV (AVG)
DMX =.020762
SMN =.138116
SMX =24.961
ANSYS
MAY 15 2003
13:42:25
MN
MX
Y
Z
X
.138116
2.896
5.654
8.412
11.17
13.928
16.686
19.444
22.203
24.961
Aln Substrate only: Fully Supported AlN/Invar36, Quarter Symmetry

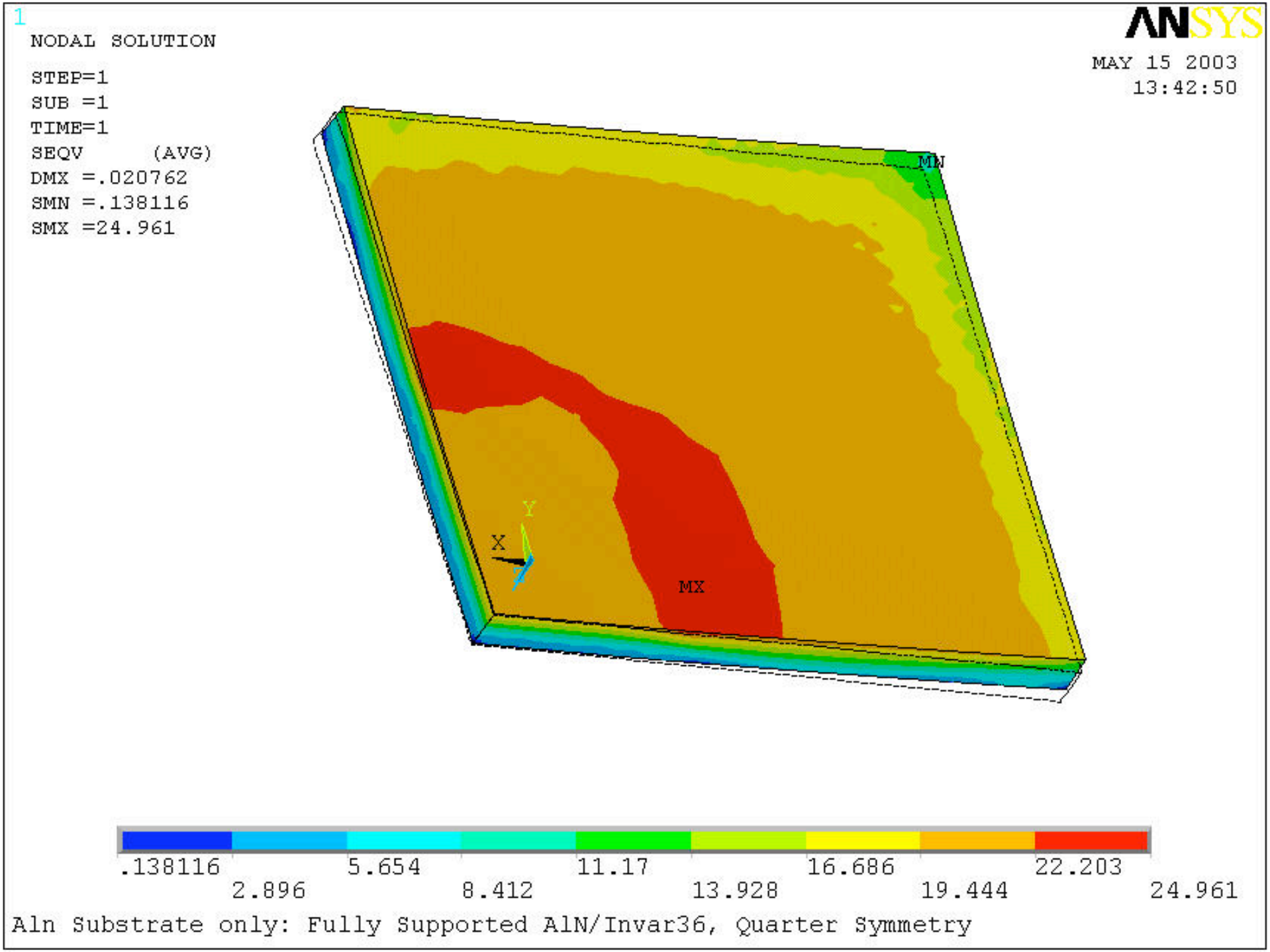
1
NODAL SOLUTION
STEP=1
SUB =1
TIME=1
SEQV (AVG)
DMX =.020762
SMN =.138116
SMX =24.961
ANSYS
MAY 15 2003
13:42:50
MN
MX
X
Y
Z
.138116
2.896
5.654
8.412
11.17
13.928
16.686
19.444
22.203
24.961
Aln Substrate only: Fully Supported AlN/Invar36, Quarter Symmetry

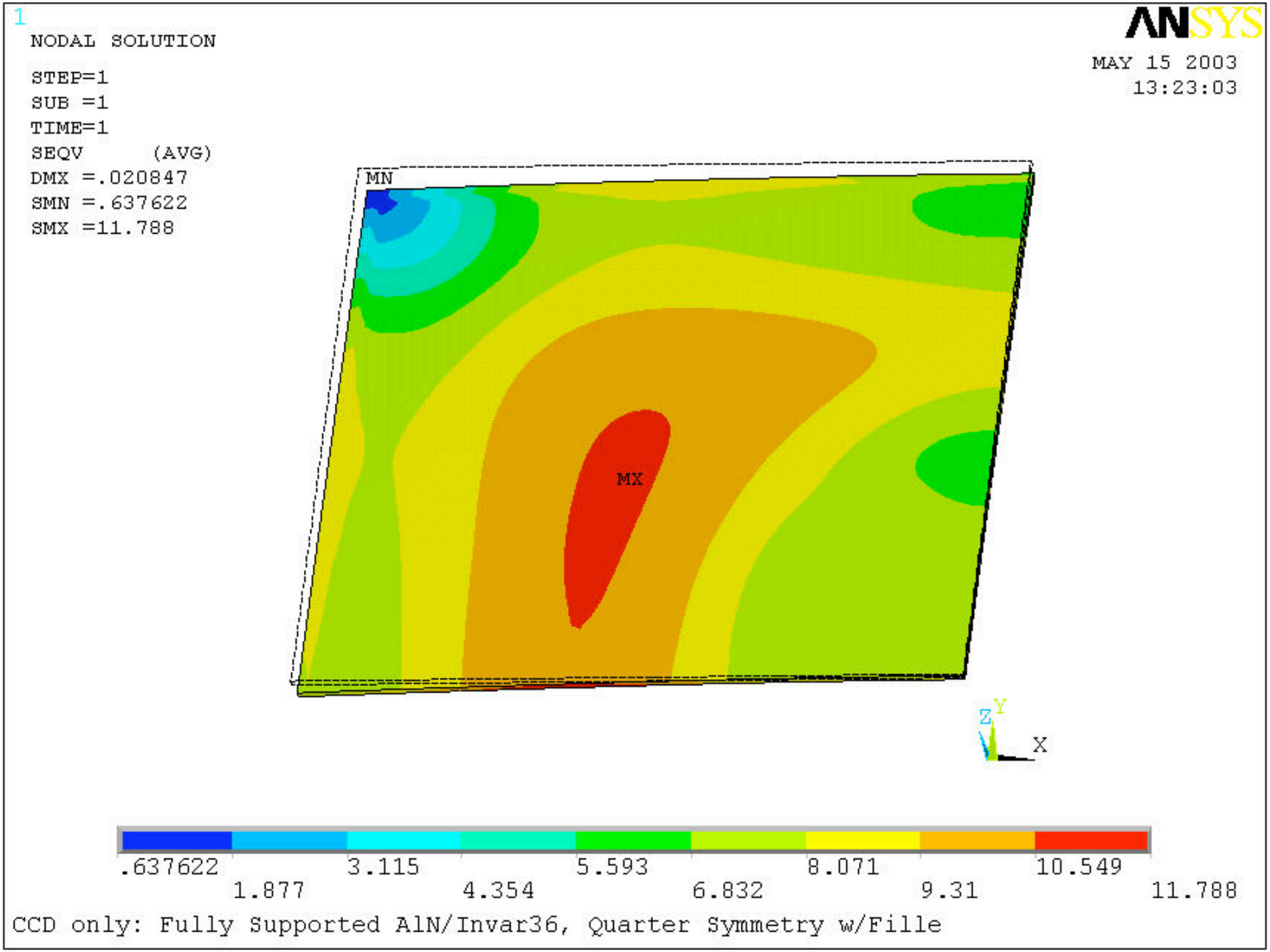
1
NODAL SOLUTION
STEP=1
SUB =1
TIME=1
SEQV (AVG)
DMX =.020847
SMN =.637622
SMX =11.788
ANSYS
MAY 15 2003
13:23:03
MN
MX
Z
Y
X
.637622
1.877
3.115
4.354
5.593
6.832
8.071
9.31
10.549
11.788
CCD only: Fully Supported AlN/Invar36, Quarter Symmetry w/Fille

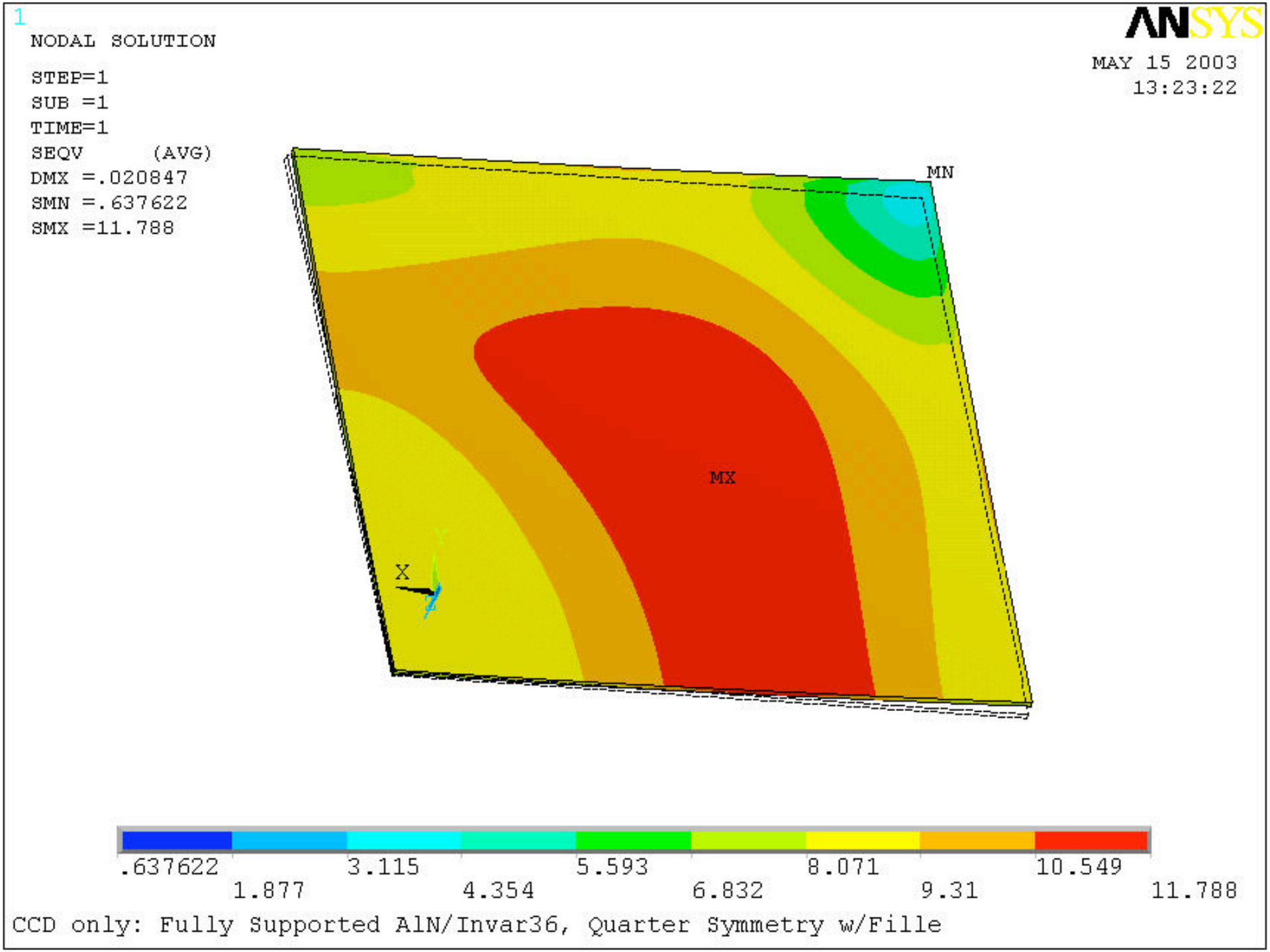
1
NODAL SOLUTION
STEP=1
SUB =1
TIME=1
SEQV (AVG)
DMX =.020847
SMN =.637622
SMX =11.788
ANSYS
MAY 15 2003
13:23:22
MN
MX
X
.637622
1.877
3.115
4.354
5.593
6.832
8.071
9.31
10.549
11.788
CCD only: Fully Supported AlN/Invar36, Quarter Symmetry w/Fille

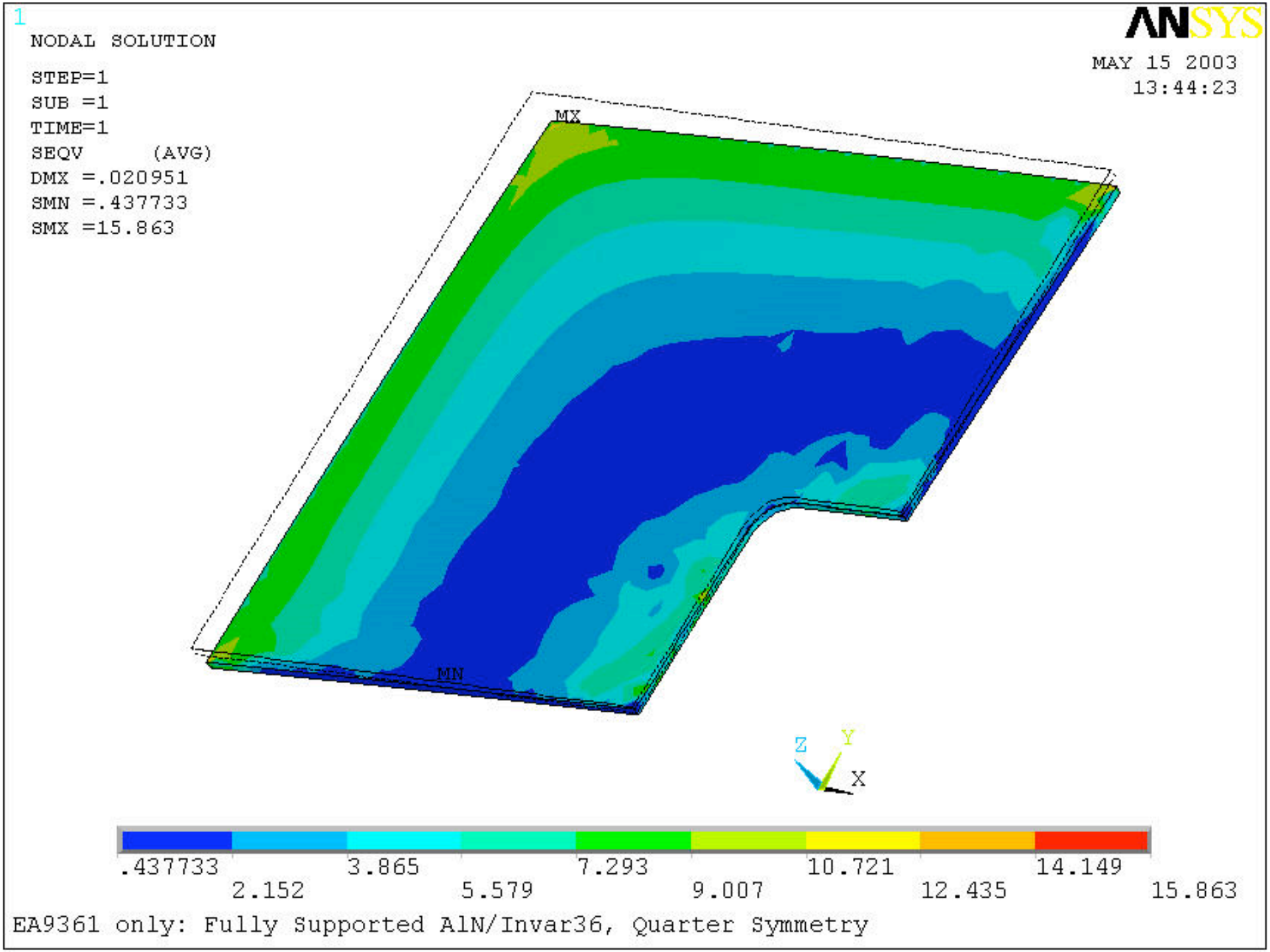
1
NODAL SOLUTION
STEP=1
SUB =1
TIME=1
SEQV (AVG)
DMX =.020951
SMN =.437733
SMX =15.863
ANSYS
MAY 15 2003
13:44:23
MX
MN
Z
Y
X
.437733
2.152
3.865
5.579
7.293
9.007
10.721
12.435
14.149
15.863
EA9361 only: Fully Supported AlN/Invar36, Quarter Symmetry

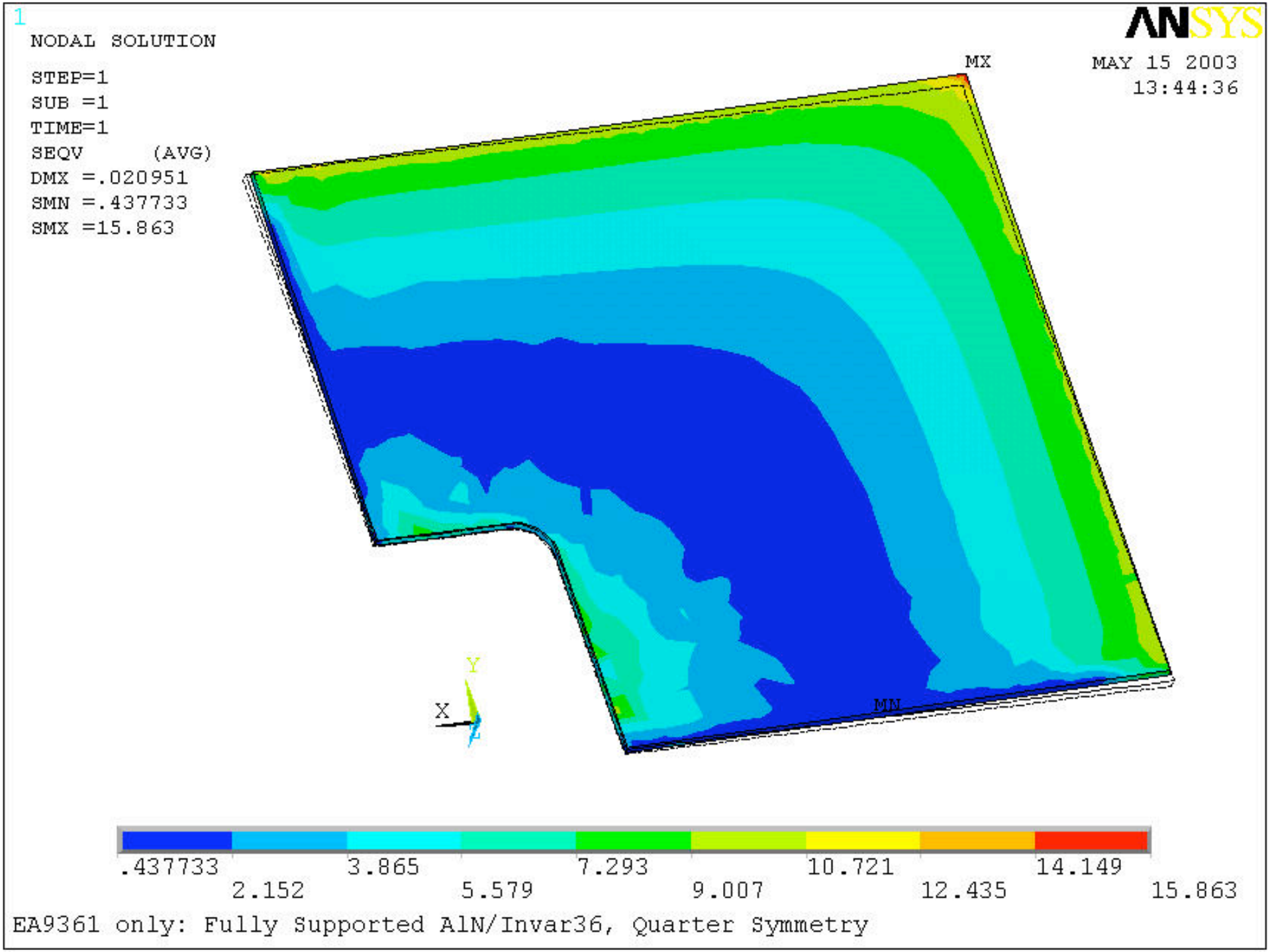
1
NODAL SOLUTION
STEP=1
SUB =1
TIME=1
SEQV (AVG)
DMX =.020951
SMN =.437733
SMX =15.863
ANSYS
MAY 15 2003
13:44:36
MX
MN
Y
X
Z
.437733
2.152
3.865
5.579
7.293
9.007
10.721
12.435
14.149
15.863
EA9361 only: Fully Supported AlN/Invar36, Quarter Symmetry

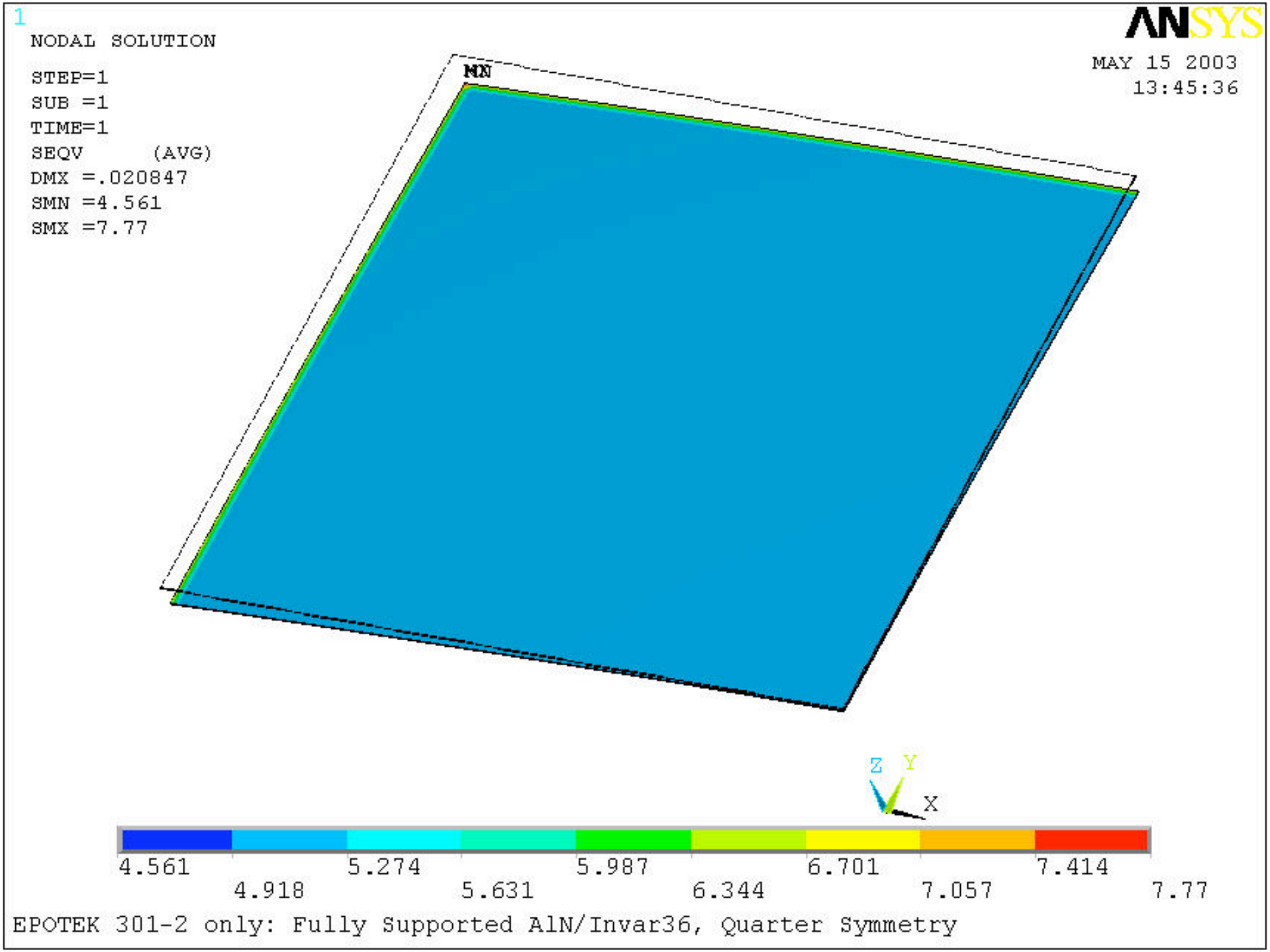
1
NODAL SOLUTION
STEP=1
SUB =1
TIME=1
SEQV (AVG)
DMX =.020847
SMN =4.561
SMX =7.77
ANSYS
MAY 15 2003
13:45:36
MN
Z
Y
X
4.561
4.918
5.274
5.631
5.987
6.344
6.701
7.057
7.414
7.77
EPOTEK 301-2 only: Fully Supported AlN/Invar36, Quarter Symmetry

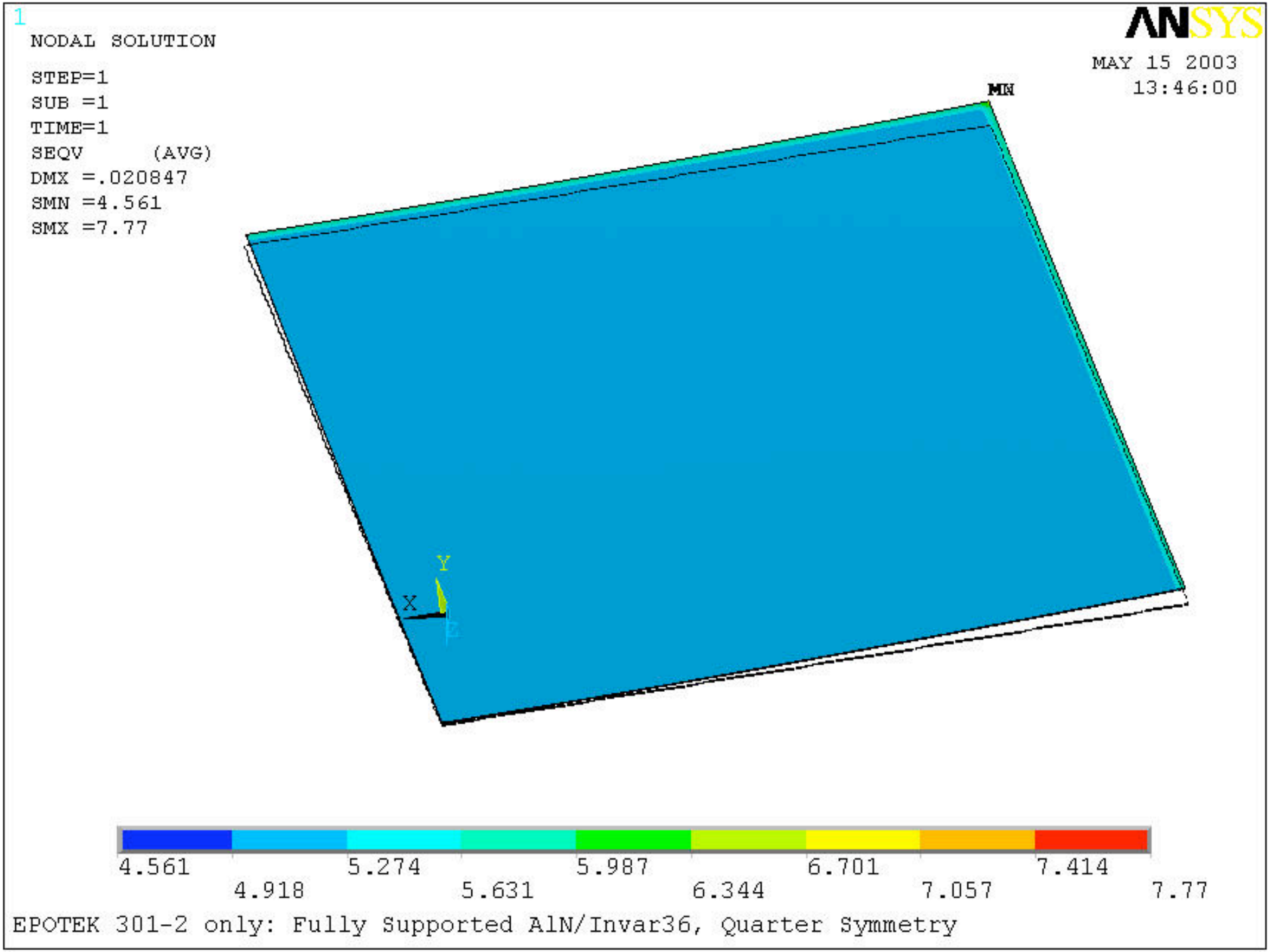
1
NODAL SOLUTION
STEP=1
SUB =1
TIME=1
SEQV (AVG)
DMX =.020847
SMN =4.561
SMX =7.77
ANSYS
MAY 15 2003
13:46:00
MN
Y
X
Z
4.561
4.918
5.274
5.631
5.987
6.344
6.701
7.057
7.414
7.77
EPOTEK 301-2 only: Fully Supported AlN/Invar36, Quarter Symmetry

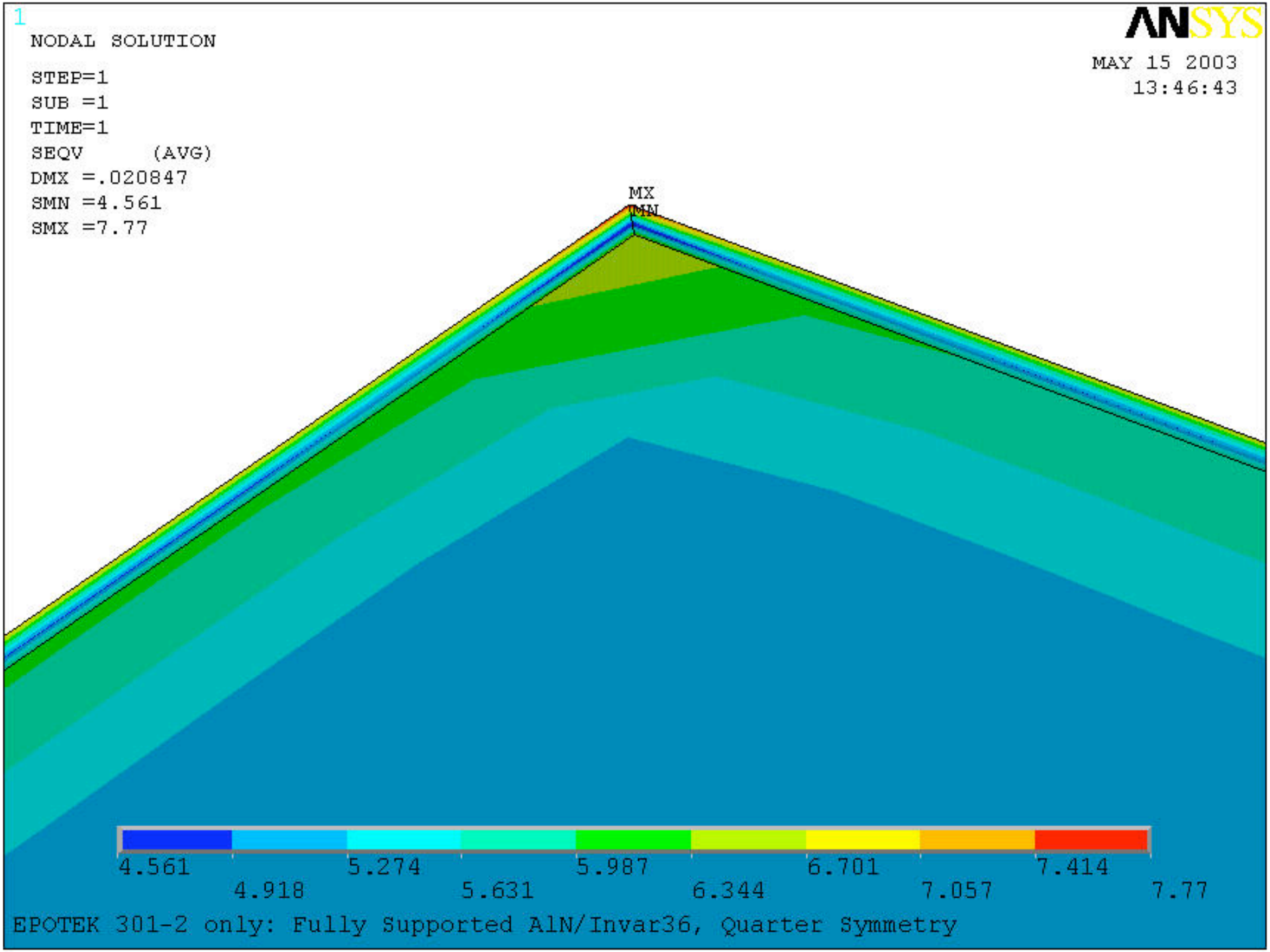
1
NODAL SOLUTION
STEP=1
SUB =1
TIME=1
SEQV (AVG)
DMX =.020847
SMN =4.561
SMX =7.77
ANSYS
MAY 15 2003
13:46:43
MX
MN
4.561
4.918
5.274
5.631
5.987
6.344
6.701
7.057
7.414
7.77
EPOTEK 301-2 only: Fully Supported AlN/Invar36, Quarter Symmetry

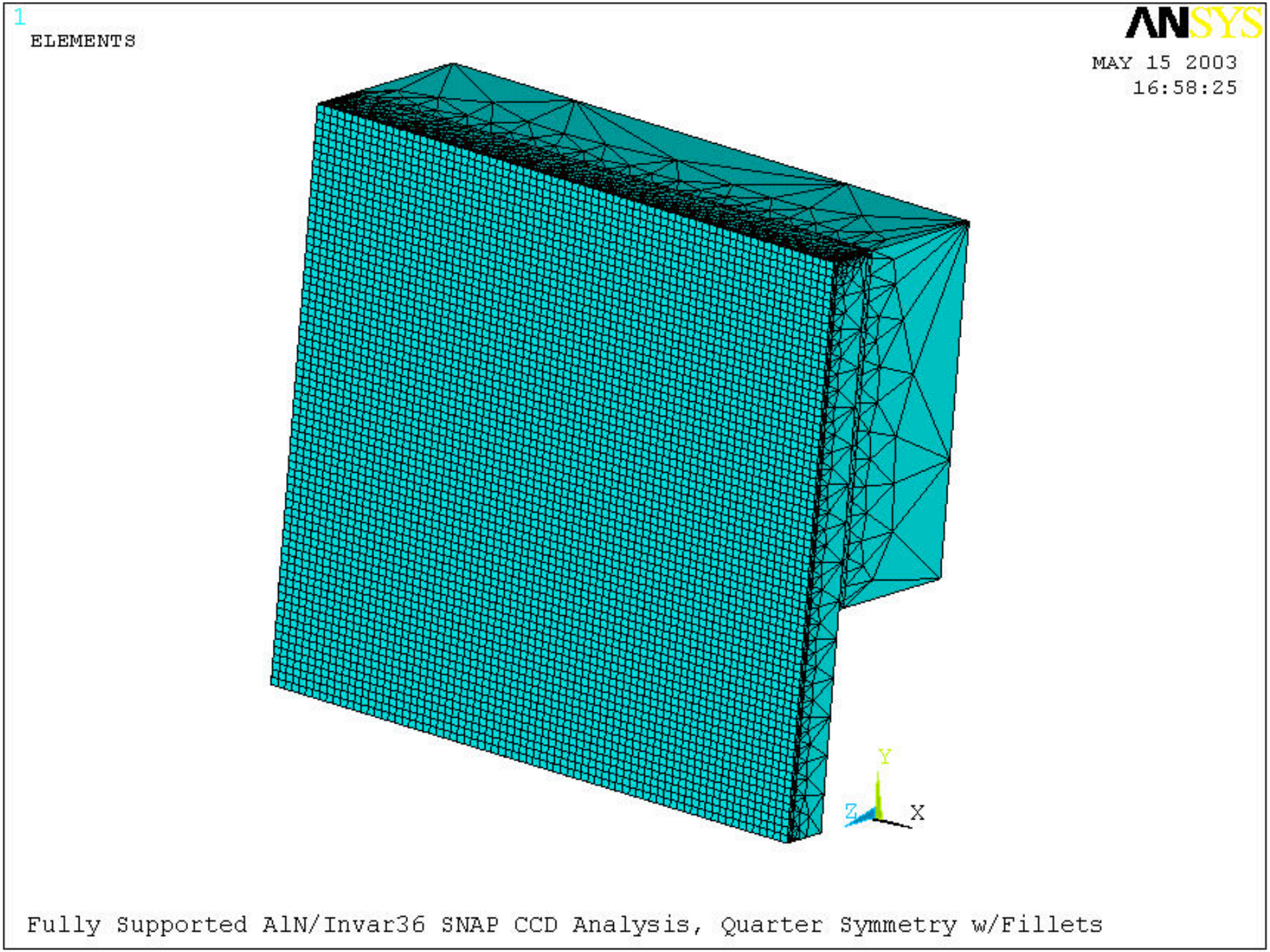
1
ELEMENTS
ANSYS
MAY 15 2003
16:58:25
Y
Z
X
Fully Supported AlN/Invar36 SNAP CCD Analysis, Quarter Symmetry w/Fillets