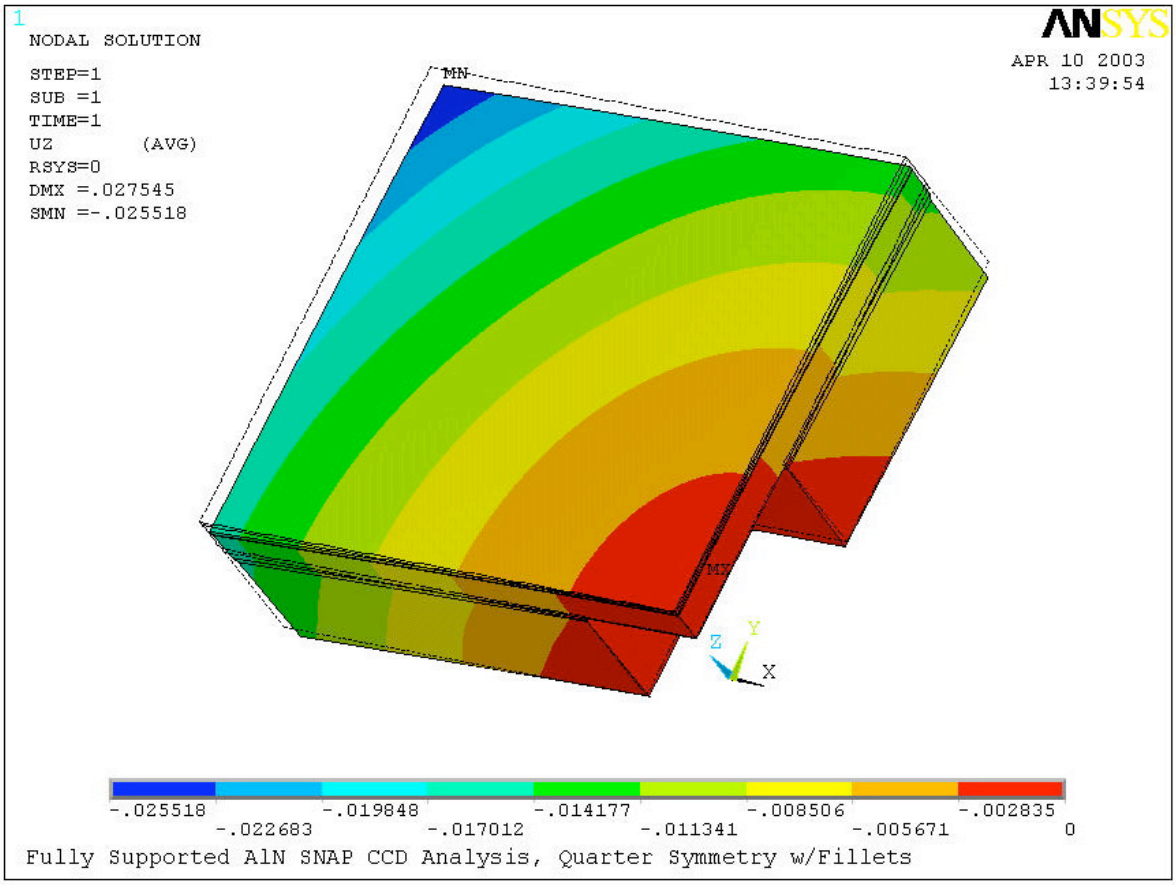
1
NODAL SOLUTION
STEP=1
SUB =1
TIME=1
UZ (AVG)
RSYS=0
DMX =.027545
SMN =-.025518
ANSYS
APR 10 2003
13:39:54
MN
MX
Z
Y
X
-.025518
-.022683
-.019848
-.017012
-.014177
-.011341
-.008506
-.005671
-.002835
0
Fully Supported AlN SNAP CCD Analysis, Quarter Symmetry w/Fillets

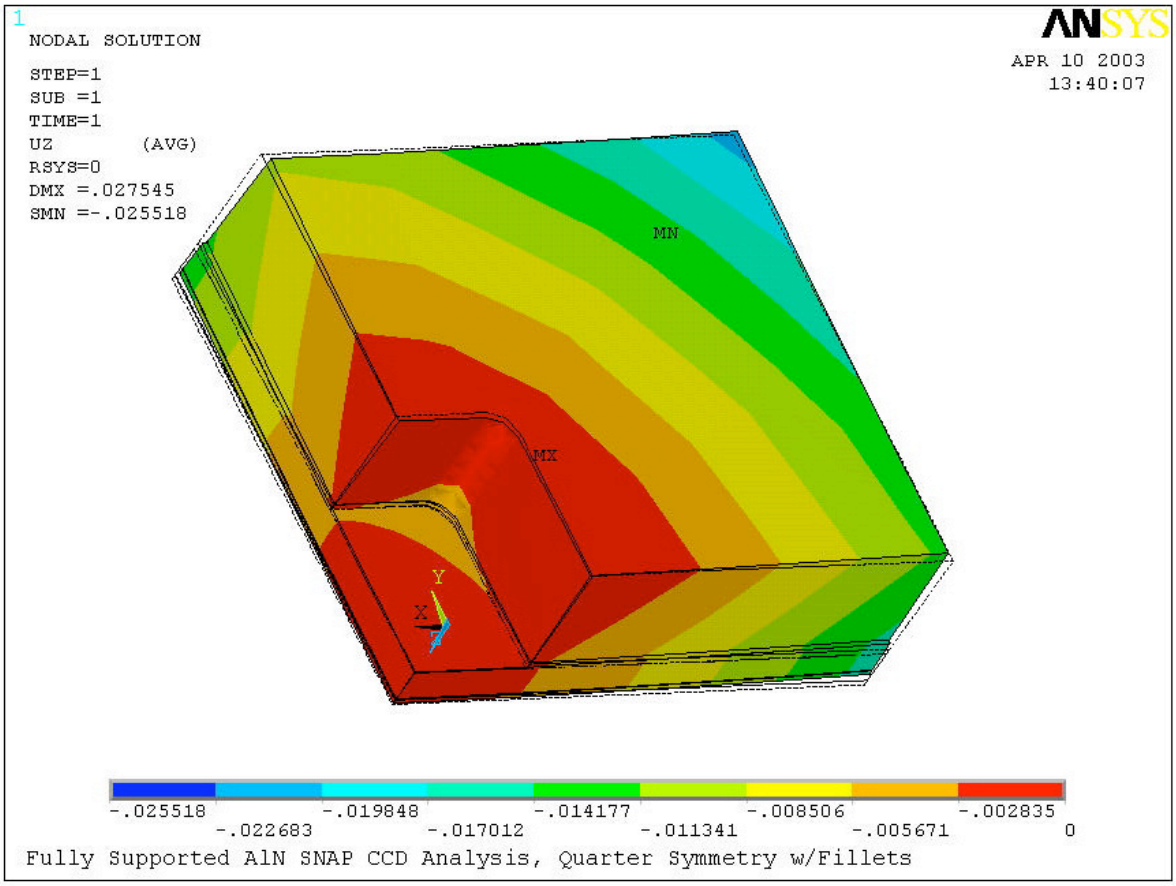
1
NODAL SOLUTION
STEP=1
SUB =1
TIME=1
UZ (AVG)
RSYS=0
DMX =.027545
SMN =-.025518
ANSYS
APR 10 2003
13:40:07
MN
MX
Y
X
Z
-.025518
-.022683
-.019848
-.017012
-.014177
-.011341
-.008506
-.005671
-.002835
0
Fully Supported AlN SNAP CCD Analysis, Quarter Symmetry w/Fillets

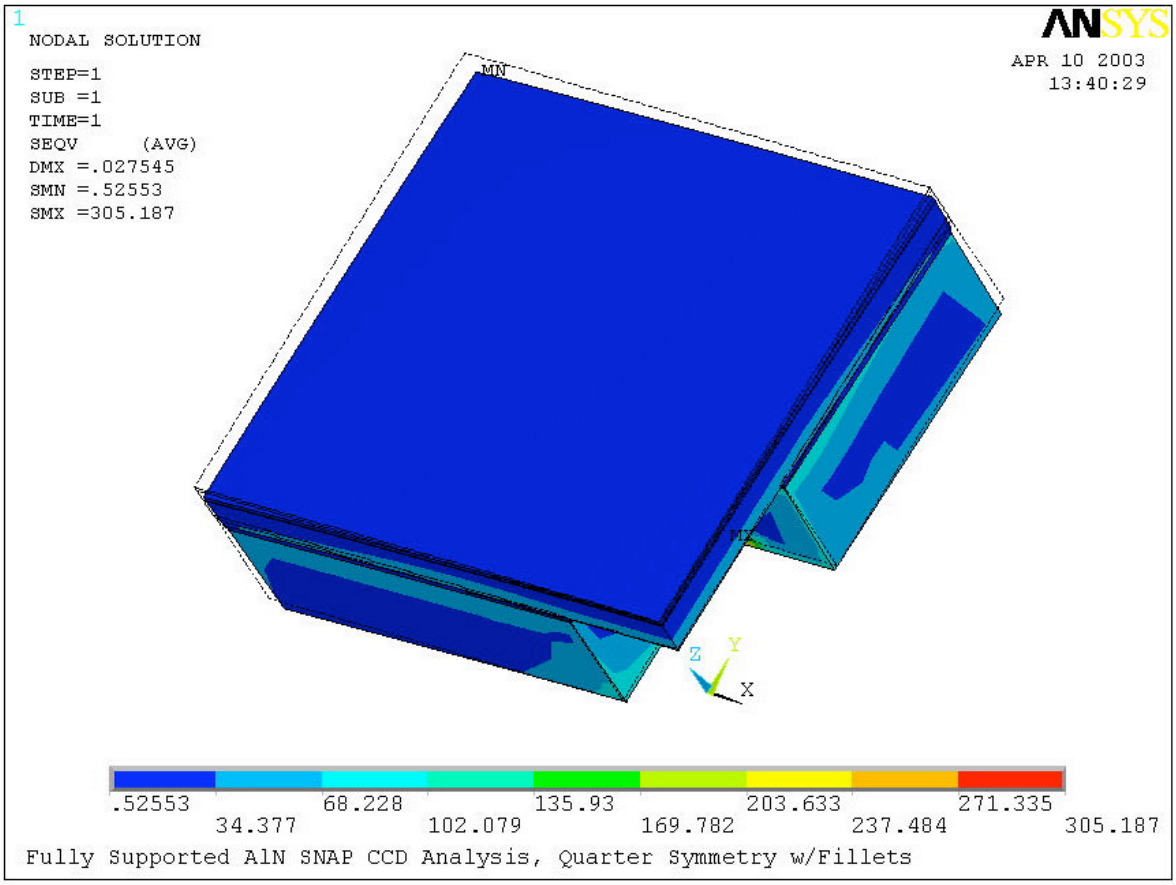
1
NODAL SOLUTION
STEP=1
SUB =1
TIME=1
SEQV (AVG)
DMX =.027545
SMN =.52553
SMX =305.187
ANSYS
APR 10 2003
13:40:29
MN
MX
Z
Y
X
.52553
34.377
68.228
102.079
135.93
169.782
203.633
237.484
271.335
305.187
Fully Supported AlN SNAP CCD Analysis, Quarter Symmetry w/Fillets

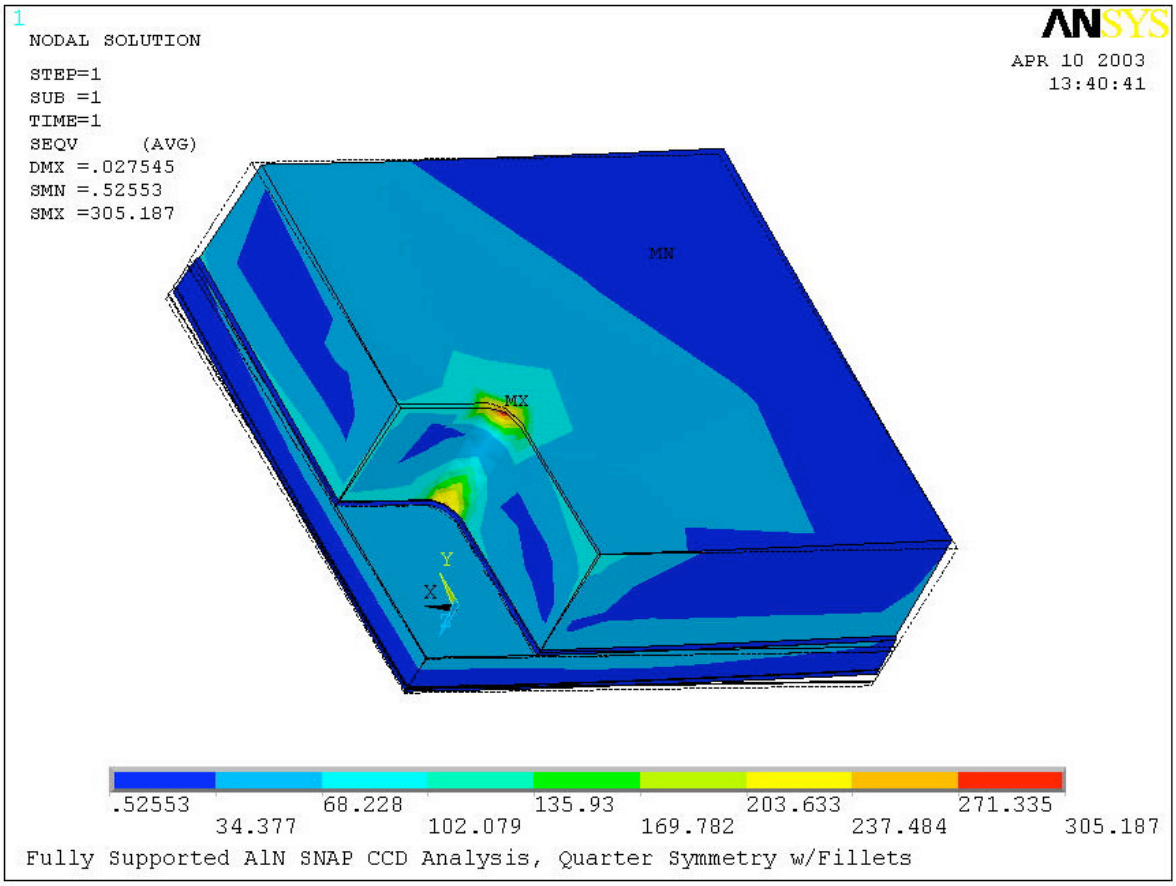
1
NODAL SOLUTION
STEP=1
SUB =1
TIME=1
SEQV (AVG)
DMX =.027545
SMN =.52553
SMX =305.187
ANSYS
APR 10 2003
13:40:41
MN
MX
Y
X
.52553
34.377
68.228
102.079
135.93
169.782
203.633
237.484
271.335
305.187
Fully Supported AlN SNAP CCD Analysis, Quarter Symmetry w/Fillets

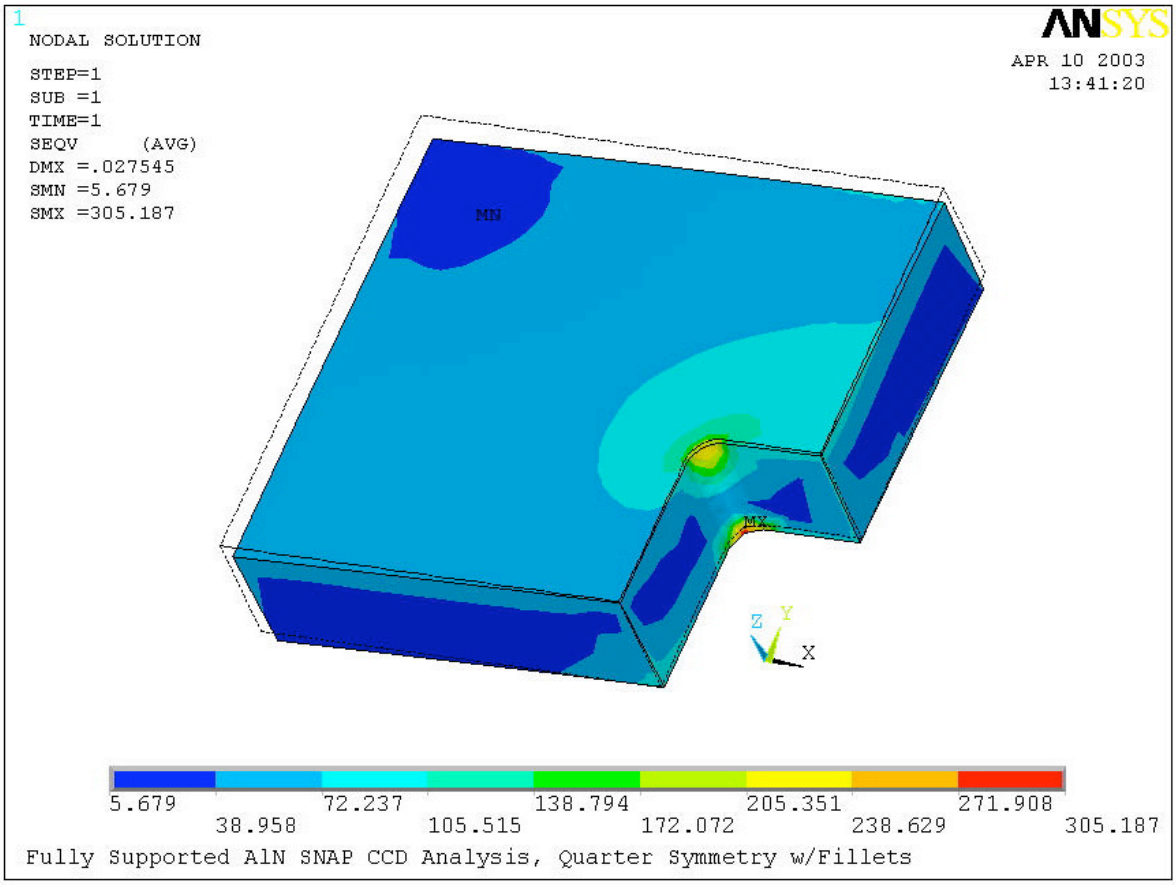
1
NODAL SOLUTION
STEP=1
SUB =1
TIME=1
SEQV (AVG)
DMX =.027545
SMN =5.679
SMX =305.187
ANSYS
APR 10 2003
13:41:20
MN
MX
Z
Y
X
5.679
38.958
72.237
105.515
138.794
172.072
205.351
238.629
271.908
305.187
Fully Supported AlN SNAP CCD Analysis, Quarter Symmetry w/Fillets

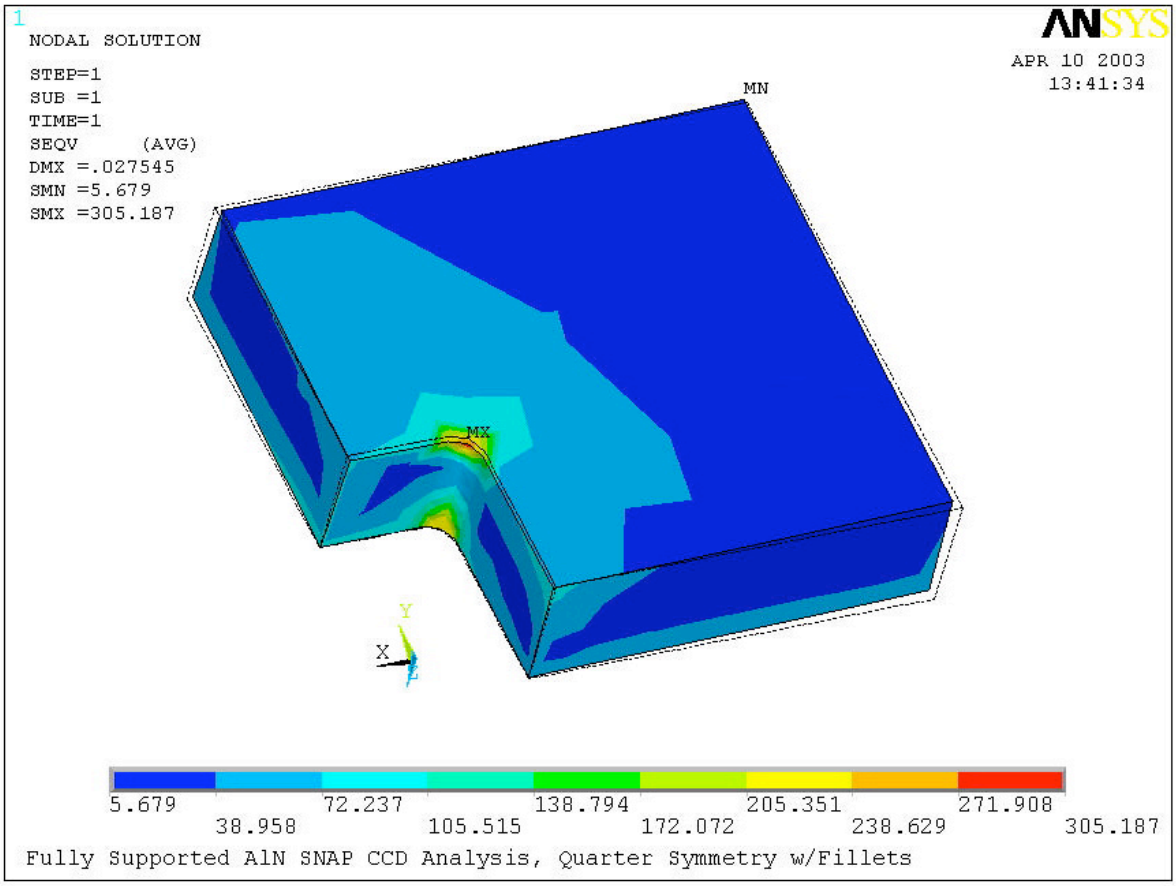
1
NODAL SOLUTION
STEP=1
SUB =1
TIME=1
SEQV (AVG)
DMX =.027545
SMN =5.679
SMX =305.187
ANSYS
APR 10 2003
13:41:34
MN
MX
Y
X
Z
5.679
38.958
72.237
105.515
138.794
172.072
205.351
238.629
271.908
305.187
Fully Supported AlN SNAP CCD Analysis, Quarter Symmetry w/Fillets

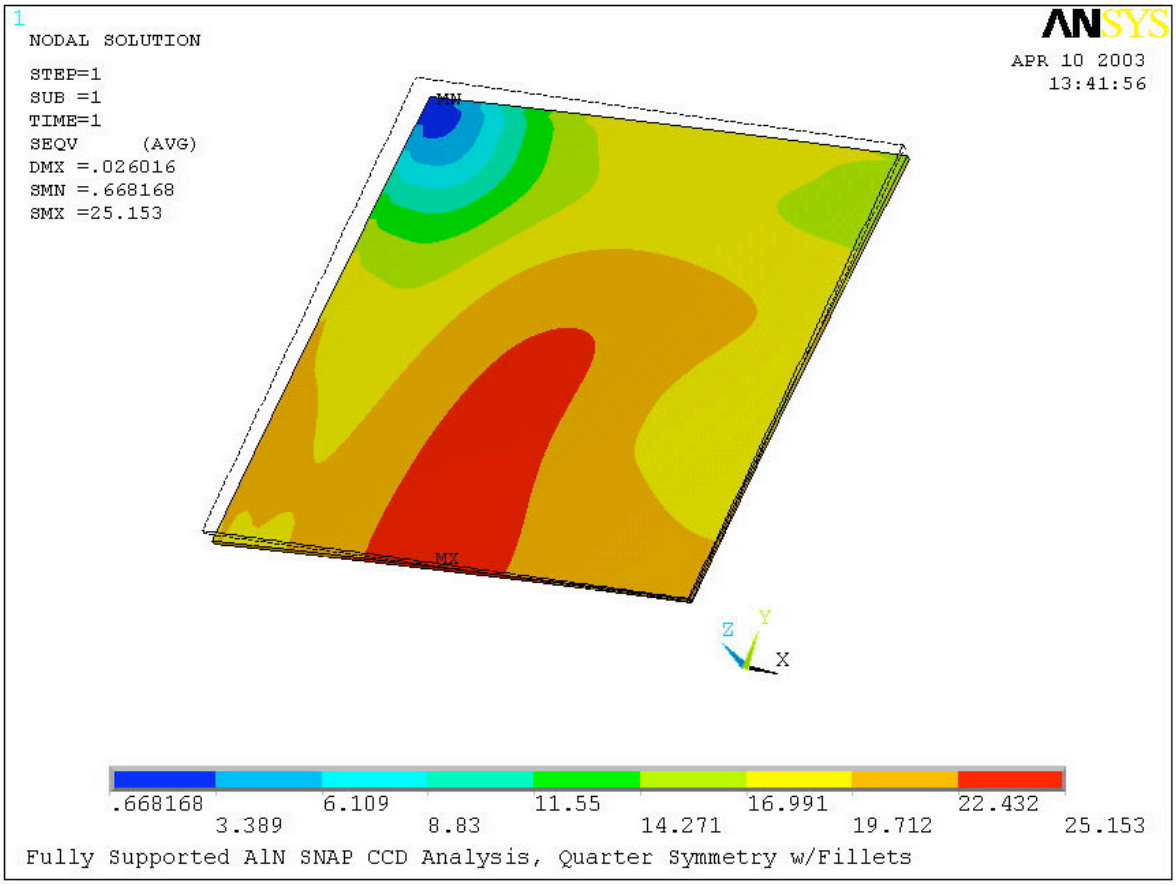
1
NODAL SOLUTION
STEP=1
SUB =1
TIME=1
SEQV (AVG)
DMX =.026016
SMN =.668168
SMX =25.153
ANSYS
APR 10 2003
13:41:56
MN
MX
Z
Y
X
.668168
3.389
6.109
8.83
11.55
14.271
16.991
19.712
22.432
25.153
Fully Supported AlN SNAP CCD Analysis, Quarter Symmetry w/Fillets

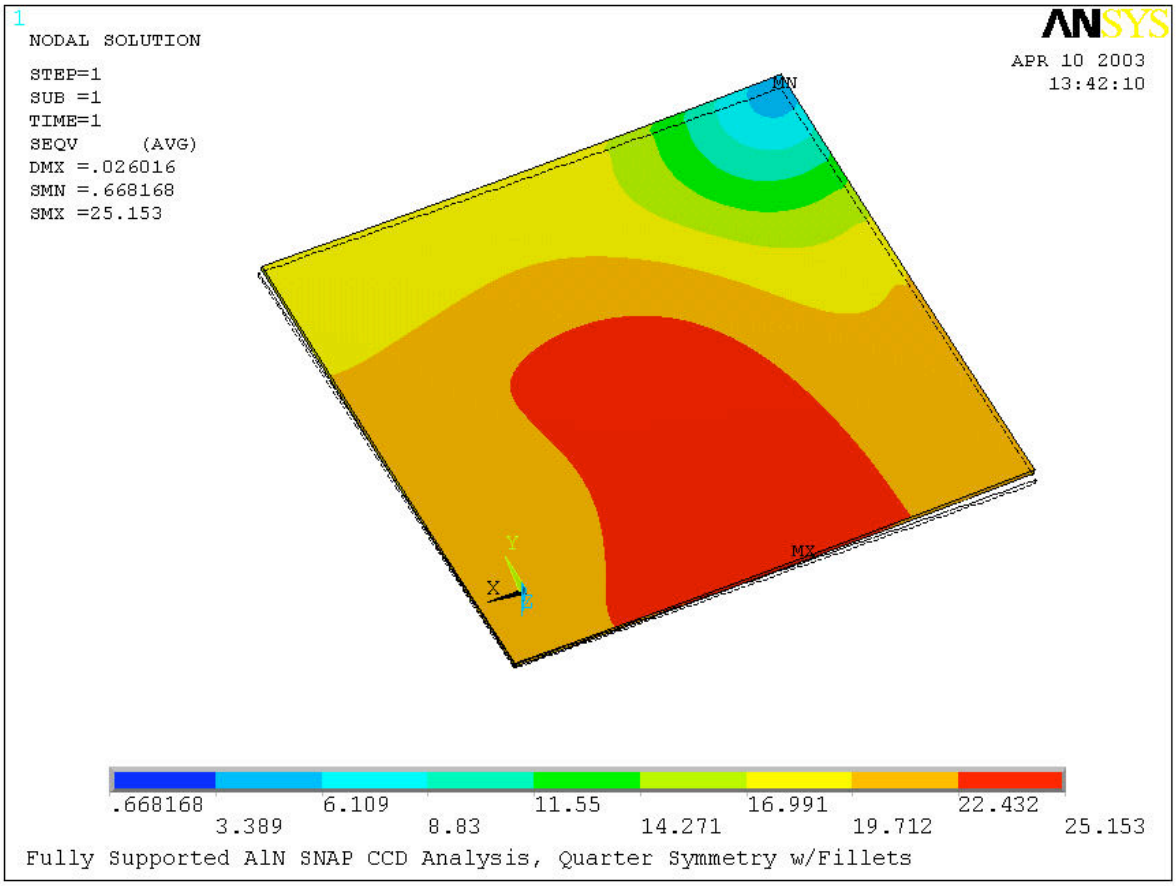
1
NODAL SOLUTION
STEP=1
SUB =1
TIME=1
SEQV (AVG)
DMX =.026016
SMN =.668168
SMX =25.153
ANSYS
APR 10 2003
13:42:10
MN
MX
Y
X
Z
.668168
3.389
6.109
8.83
11.55
14.271
16.991
19.712
22.432
25.153
Fully Supported AlN SNAP CCD Analysis, Quarter Symmetry w/Fillets

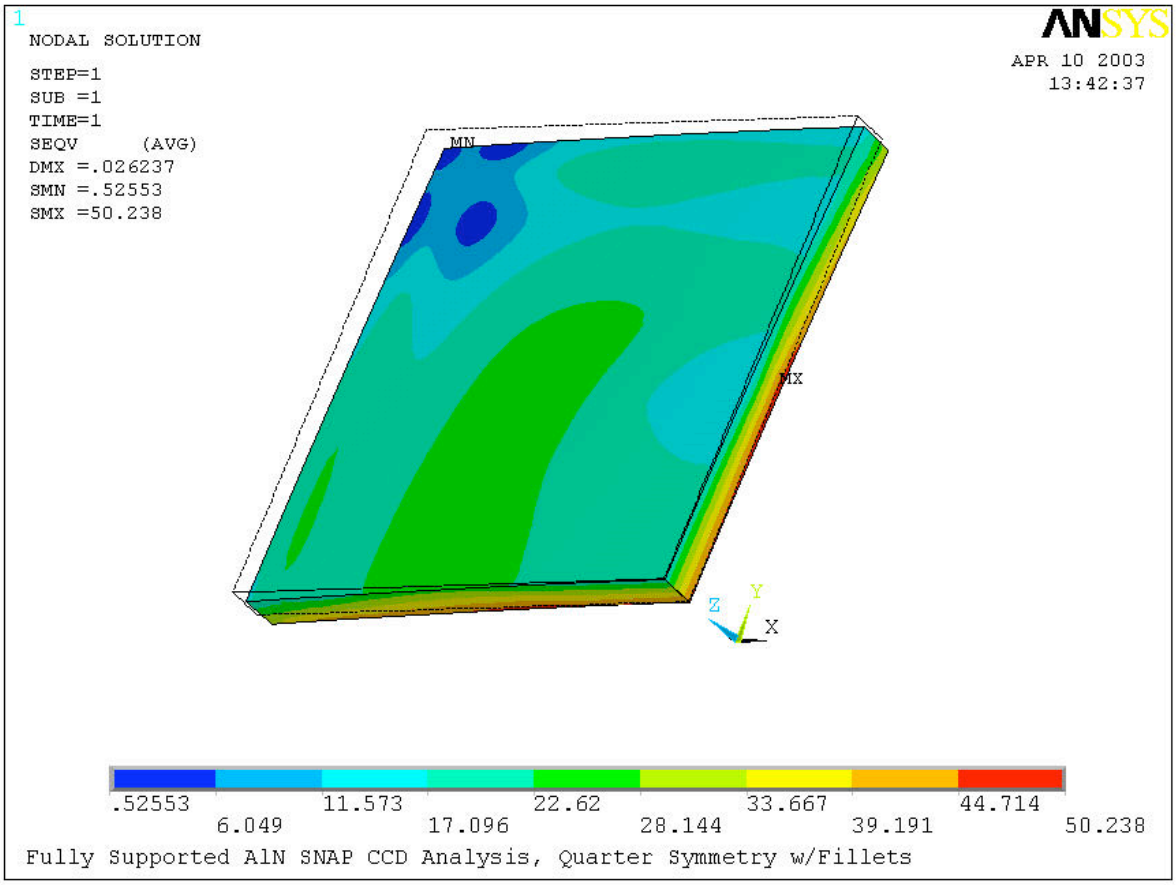
1
NODAL SOLUTION
STEP=1
SUB =1
TIME=1
SEQV (AVG)
DMX =.026237
SMN =.52553
SMX =50.238
ANSYS
APR 10 2003
13:42:37
MN
MX
Z
Y
X
.52553
6.049
11.573
17.096
22.62
28.144
33.667
39.191
44.714
50.238
Fully Supported AlN SNAP CCD Analysis, Quarter Symmetry w/Fillets

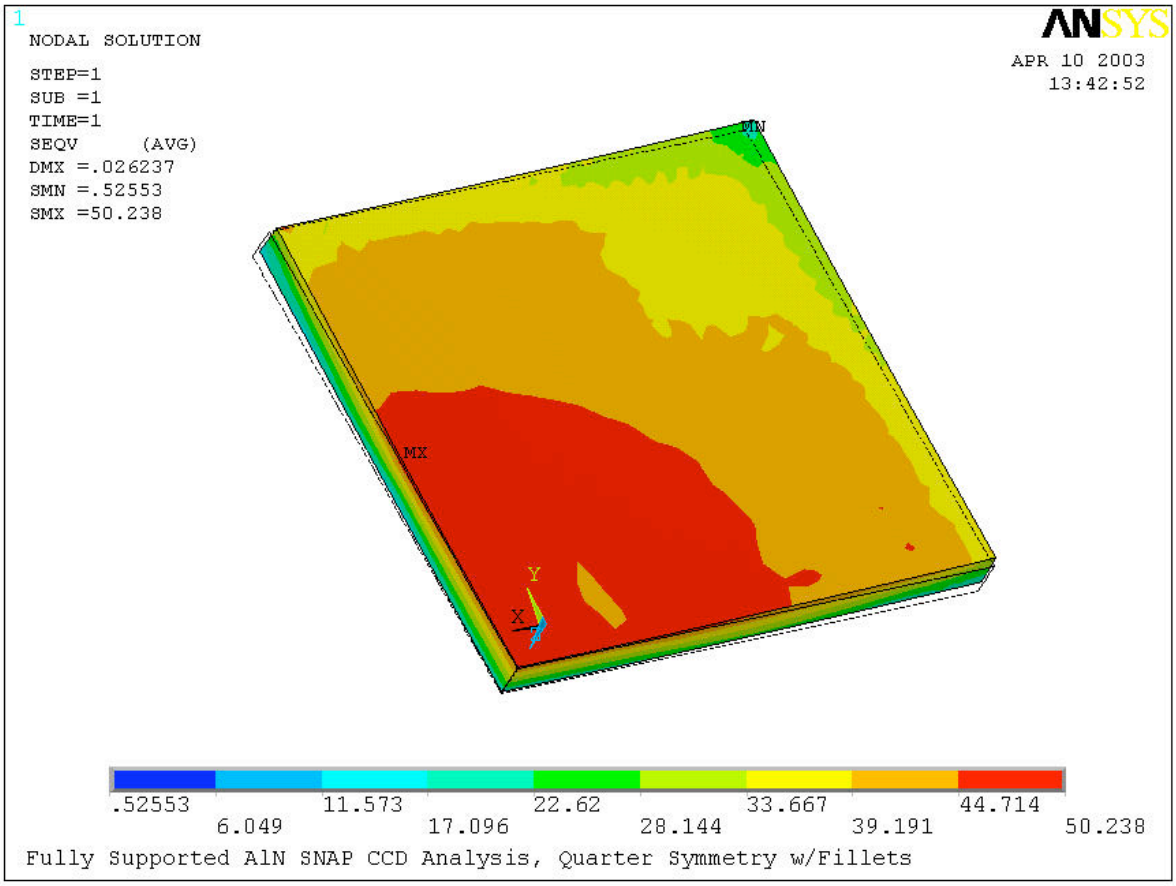
1
NODAL SOLUTION
STEP=1
SUB =1
TIME=1
SEQV (AVG)
DMX =.026237
SMN =.52553
SMX =50.238
ANSYS
APR 10 2003
13:42:52
MN
MX
Y
X
.52553
6.049
11.573
17.096
22.62
28.144
33.667
39.191
44.714
50.238
Fully Supported AlN SNAP CCD Analysis, Quarter Symmetry w/Fillets

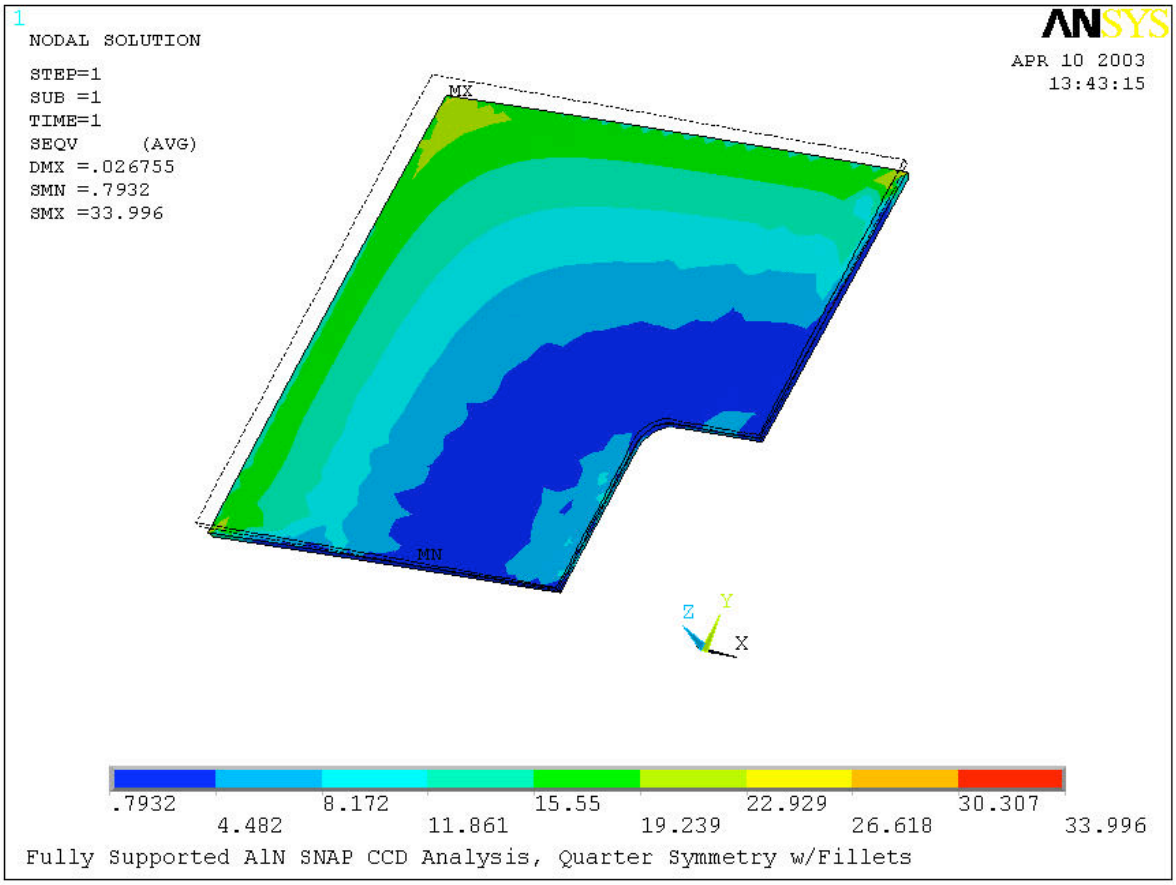
1
NODAL SOLUTION
STEP=1
SUB =1
TIME=1
SEQV (AVG)
DMX =.026755
SMN =.7932
SMX =33.996
ANSYS
APR 10 2003
13:43:15
MX
MN
Z
Y
X
.7932
4.482
8.172
11.861
15.55
19.239
22.929
26.618
30.307
33.996
Fully Supported AlN SNAP CCD Analysis, Quarter Symmetry w/Fillets

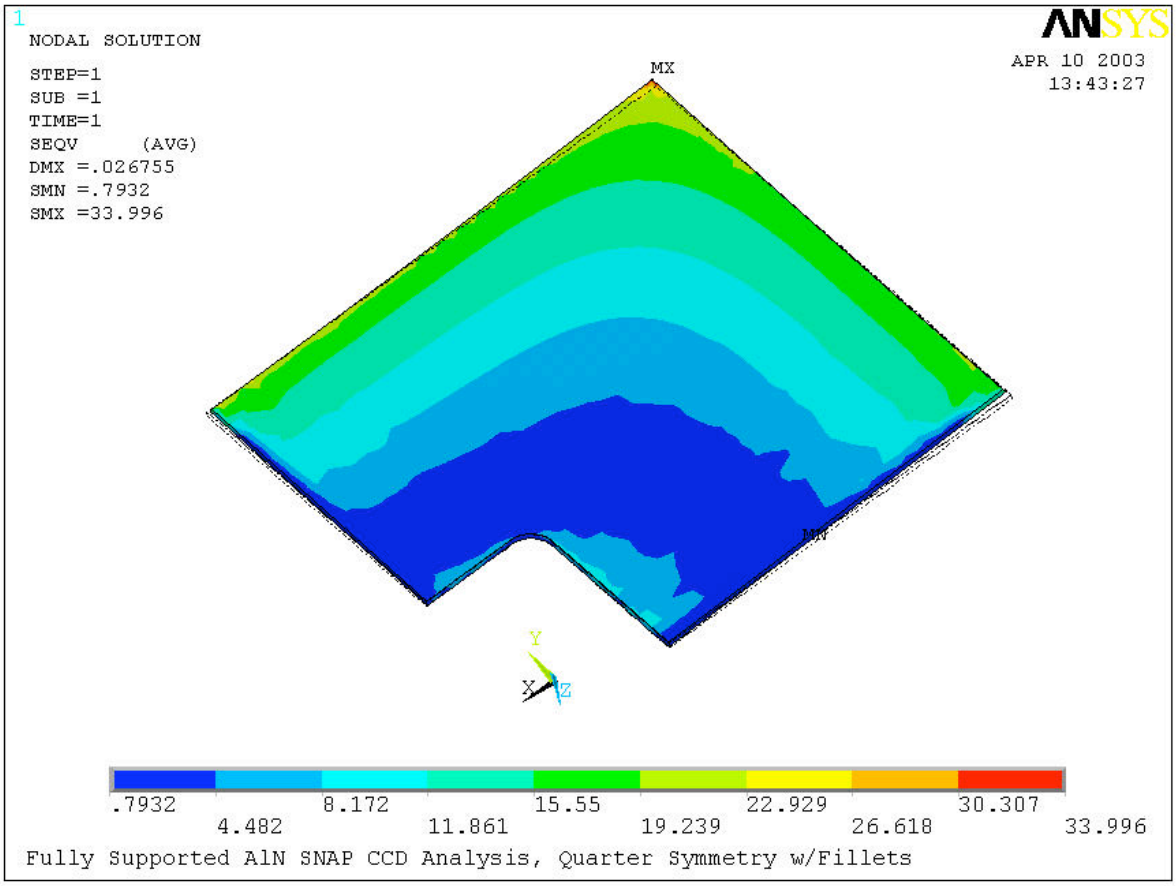
1
NODAL SOLUTION
STEP=1
SUB =1
TIME=1
SEQV (AVG)
DMX =.026755
SMN =.7932
SMX =33.996
ANSYS
APR 10 2003
13:43:27
MX
MN
Y
X
Z
.7932
4.482
8.172
11.861
15.55
19.239
22.929
26.618
30.307
33.996
Fully Supported AlN SNAP CCD Analysis, Quarter Symmetry w/Fillets

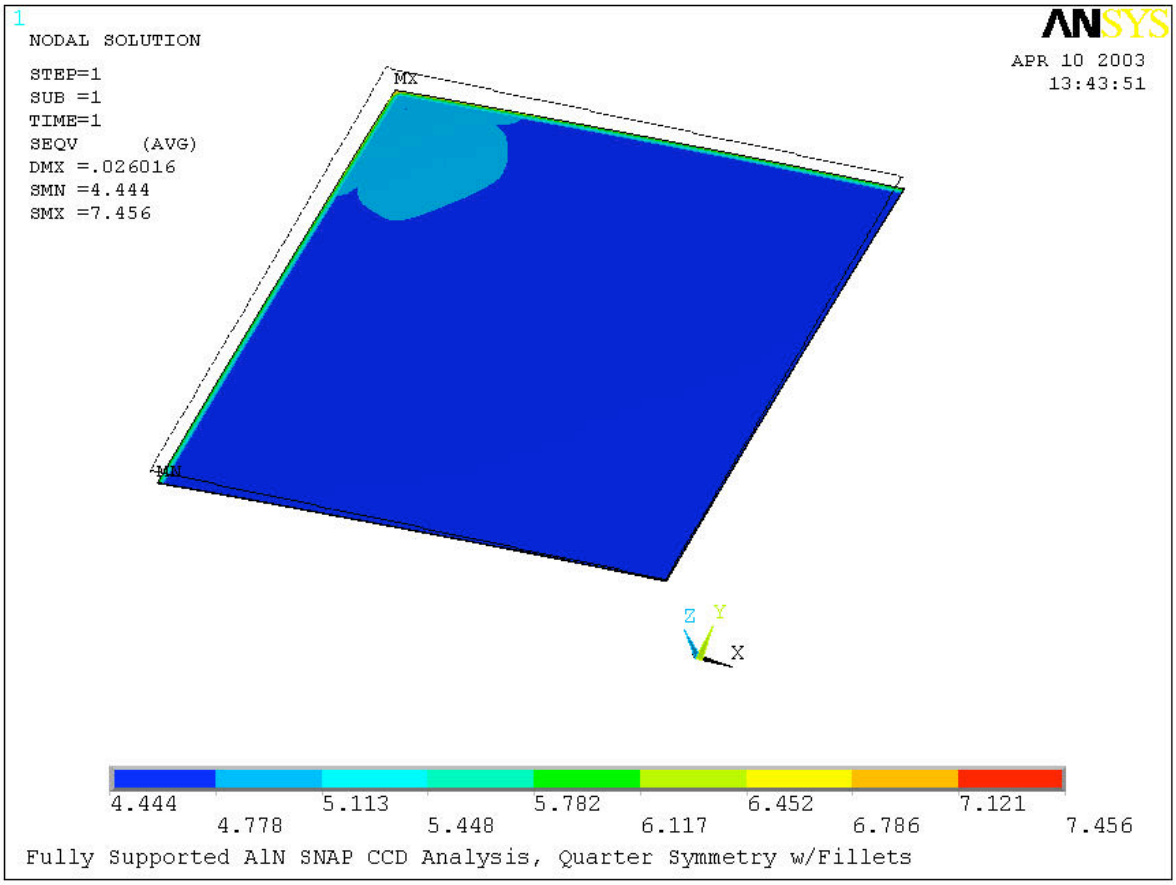
1
NODAL SOLUTION
STEP=1
SUB =1
TIME=1
SEQV (AVG)
DMX =.026016
SMN =4.444
SMX =7.456
ANSYS
APR 10 2003
13:43:51
MX
MN
Z
Y
X
4.444
4.778
5.113
5.448
5.782
6.117
6.452
6.786
7.121
7.456
Fully Supported AlN SNAP CCD Analysis, Quarter Symmetry w/Fillets

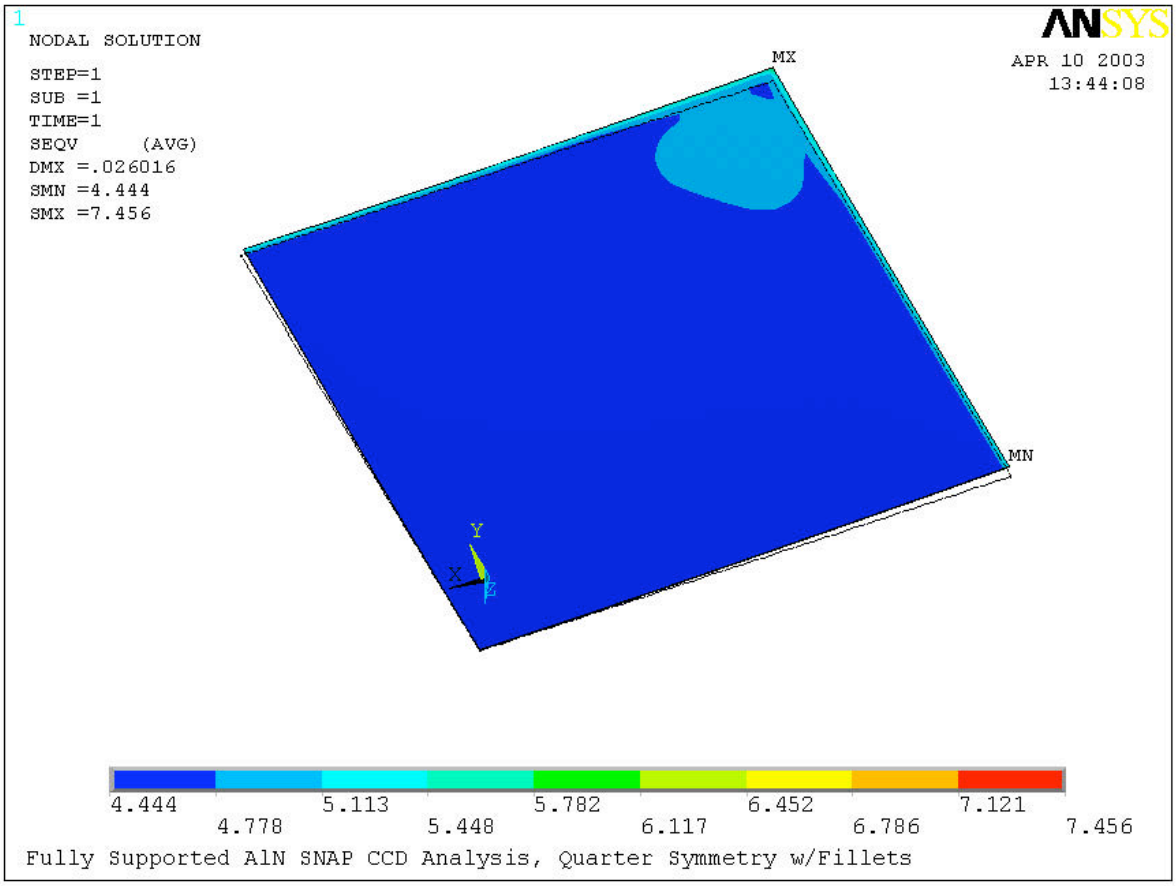
1
NODAL SOLUTION
STEP=1
SUB =1
TIME=1
SEQV (AVG)
DMX =.026016
SMN =4.444
SMX =7.456
ANSYS
APR 10 2003
13:44:08
MX
MN
Y
X
Z
4.444
4.778
5.113
5.448
5.782
6.117
6.452
6.786
7.121
7.456
Fully Supported AlN SNAP CCD Analysis, Quarter Symmetry w/Fillets

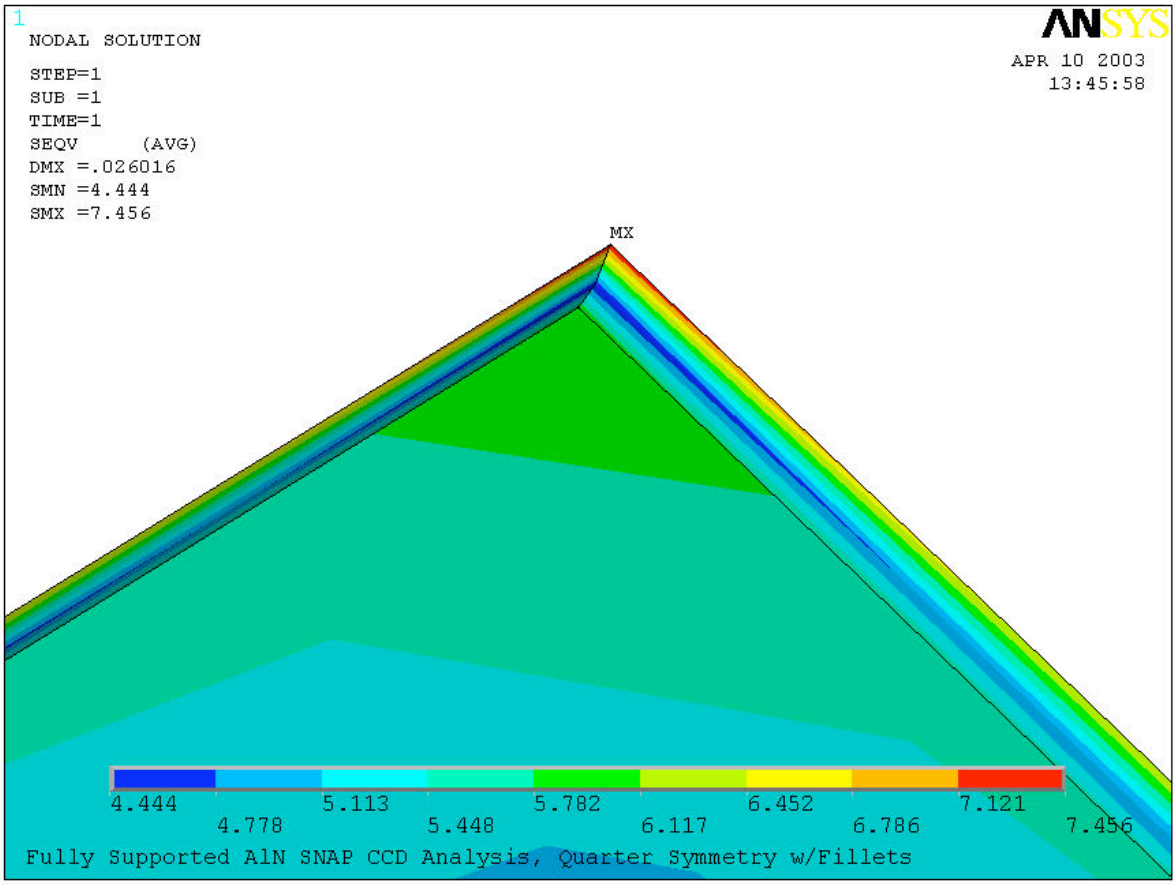
1
NODAL SOLUTION
STEP=1
SUB =1
TIME=1
SEQV (AVG)
DMX =.026016
SMN =4.444
SMX =7.456
ANSYS
APR 10 2003
13:45:58
MX
4.444
4.778
5.113
5.448
5.782
6.117
6.452
6.786
7.121
7.456
Fully Supported AlN SNAP CCD Analysis, Quarter Symmetry w/Fillets