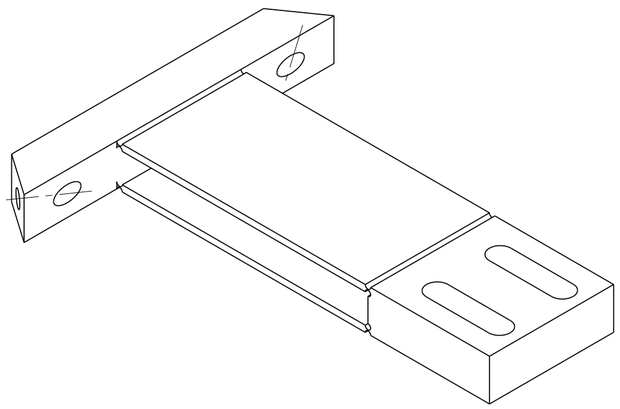

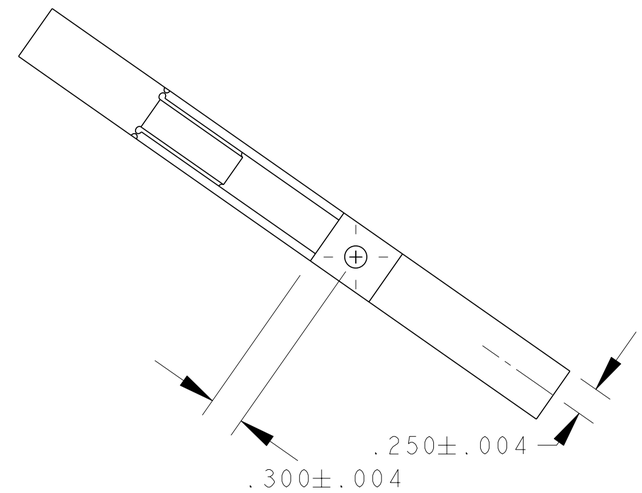

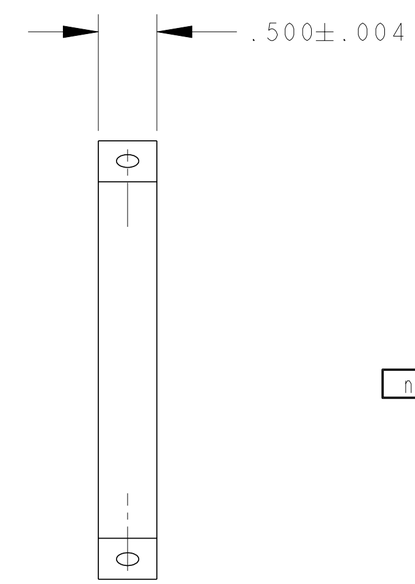

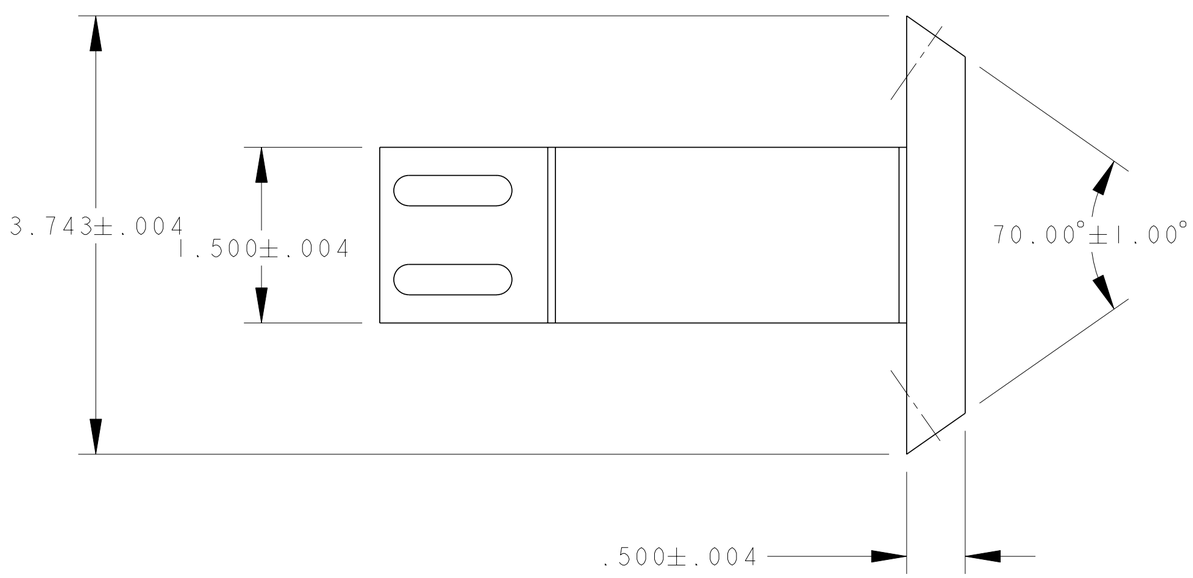

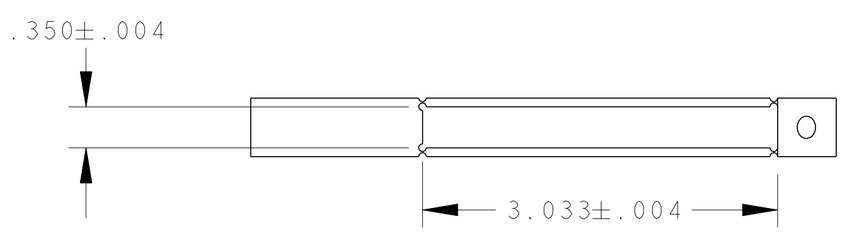

nnXnnn 3

REV	DWG	CHK	ZONE	DATE	CHANGES

UNLESS OTHERWISE SPECIFIED

TOLERANCES		
	X.X±0.1	FRAC.±1/64
	X.XX±0.01	Angles±1.00°
	X.XXX±0.004	FINISH 125

DO NOT SCALE PRINT

THREADS ARE CLASS 2
CHAMFER ENDS OF ALL SCREW TREADS 30°
CUT ROUND, 1.5 THREAD RELIEF ON MACHINED THREADS
BREAK EDGES .016 MAX. ON MACHINED WORK
REMOVE BURRS, WELD SPLATTER & LOOSE SCALE
IN ACCORDANCE WITH ASME Y14.5M & B46.1

SURFACE TREATMT	-	
IDENT METHOD	TAG	
DWG BY	Unknown	DATE 06-Nov-03
CHK BY	-	DATE -

SHOP ORDERS

ACCT NO.	SERIAL NO. -	
DATE ISSD -	DATE REQD -	NO. REQD
DELIVER TO:		

LAWRENCE BERKELEY NATIONAL LABORATORY
UNIVERSITY OF CALIFORNIA-BERKELEY

DesignWorks

FEMTOSECOND CRYOCOOLER CRYSTAL HOLDER

CROSSBRACE

MICR FLM:	PART	1/1	**SHEET 1 OF 1**
PAT CLR:	DWG. TYPE	SCALE	DWG NO. / SIZE / REV
DESIGN ACCT NO.	CATEGORY CODE	SHOWN ON	
UC40-16	DWG 4 nnXnnn	nnXnnn	nnXnnn 3

Drawing: WEBBING_CROSSBRACE Type: PART Model: WEBBING_CROSSBRACE