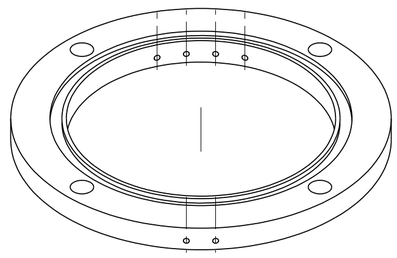

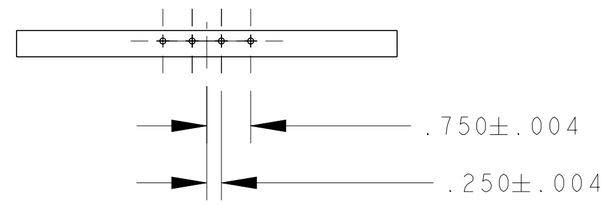

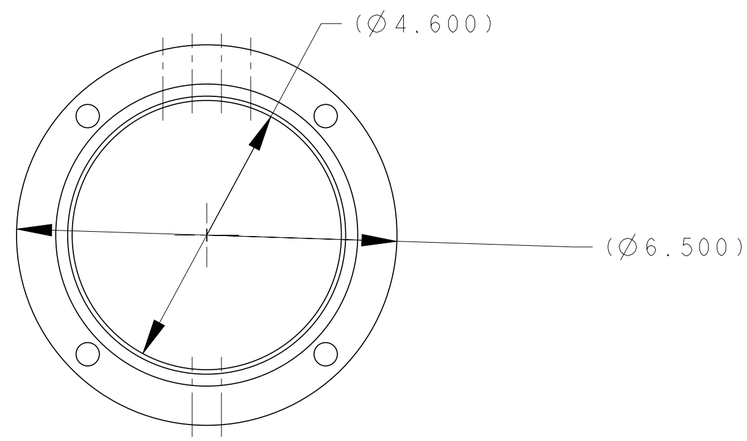

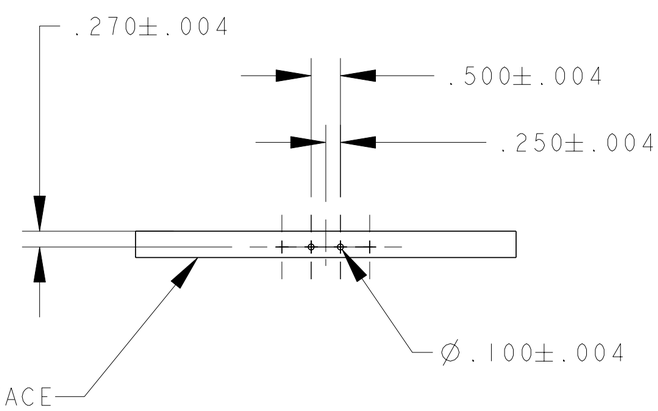

nnXnnn 3

REV	DWG	CHK	ZONE	DATE	CHANGES

UNLESS OTHERWISE SPECIFIED

TOLERANCES		
	X.X±0.1	FRAC.±1/64
	X.XX±0.01	Angles±1.00°
	X.XXX±0.004	FINISH 32

DO NOT SCALE PRINT

THREADS ARE CLASS 2
CHAMFER ENDS OF ALL SCREW TREADS 30°
CUT ROUND, 1.5 THREAD RELIEF ON MACHINED THREADS
BREAK EDGES .016 MAX. ON MACHINED WORK
REMOVE BURRS, WELD SPLATTER & LOOSE SCALE
IN ACCORDANCE WITH ASME Y14.5M & B46.1

SURFACE TREATMT	-		
IDENT METHOD	TAG		
DWG BY	D.CHENG	DATE	07-Aug-03
CHK BY	-	DATE	-

SHOP ORDERS

ACCT NO.	UC4016	SERIAL NO.	-
DATE ISSD	-	DATE REQD	-
NO. REQD			
DELIVER TO:			

LAWRENCE BERKELEY NATIONAL LABORATORY
UNIVERSITY OF CALIFORNIA-BERKELEY

DesignWorks
FEMTOSECOND CRYOCOOLER CRYSTAL HOLDER
VACUUM VESSEL FLANGE

MICR FLM:	PART	1/2	**SHEET 1 OF 1**
PAT CLR:	DWG. TYPE	SCALE	DWG NO. / SIZE / REV
DESIGN ACCT NO.	CATEGORY CODE	SHOWN ON	
UC40-16	DW4216	nnXnnn	**nnXnnn 3**

Drawing: SPACER_FLANGE_HOLES Type: PART Model: SPACER_FLANGE