Author
Ken Chow, Steve Dellinges, Tim Loew

Department
Mechanical Engineering

Date
08/08/03

Program - Project - Job: DesignWorks Rock Stand Project in Support of LBNL EETD Yucca Mountain Rock Sample Permeation Study

Title: General Information for DesignWorks Effort

1. Project Description

The DesignWorks engineering effort described in this document was in support of the LBNL EETD Yucca Mountain rock sample permeation study.

Previously, DesignWorks designed and built a Rock Trolley (Engineering Note Serial# M8161) that was used at Yucca mountain for extraction of an approximately 12,000 lb rock sample from a tunnel wall. This trolley now serves as a permanent pallet for the rock.

The current Rock Stand effort includes the design and fabrication of a welded tubular steel structure to support the rock and Rock Trolley for testing at a height of 1m above a cement pad. The pad is located in LBNL Building 51.

2. Engineering Information

Rock Stand engineering design information is contained in LBNL Engineering Note Serial# M8195. It includes seismic considerations, failure modes, weld design, pad preparation, base plate design, and FEA results.

3. Load cells

DesignWorks selected Omega load cells for mounting onto the Rock Stand platform. The Rock Trolley is placed directly on the load cells in the permanent configuration.

Load cells are arranged in a four-place rectangular configuration per client specification even though planarity is not guaranteed with the extra support location.

Load Cell Description
2-in Miniature Stainless Steel Compression Load Cells
0 – 5,000 lb capacity
Omega Model #LC305-5K
Qty. 4

4. Overall Rock Stand Dimensions

Stand Height: 113" from top of pad
Stand Width x Depth: 82 x 82"
Stand Weight: 3578 lb
Rock Weight (estimate): 12000 lb
Rock Trolley Weight: 471 lb

5. Assembly and Part Drawing Numbers are from 25H1452 to 25H1662.

DWG. NO.	SIZE	REV.	SH.
25H1452		1	1

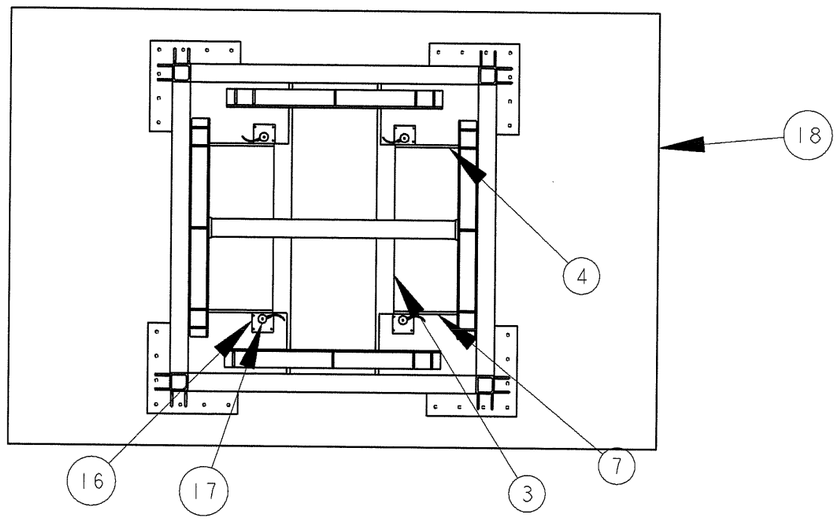

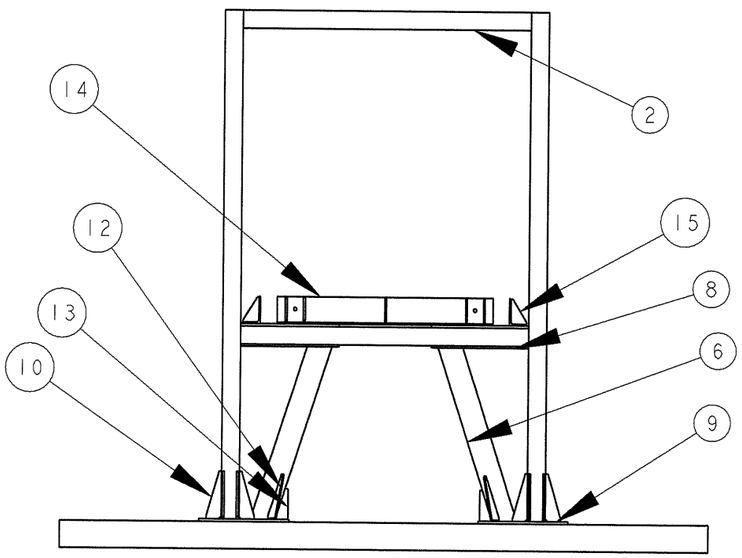

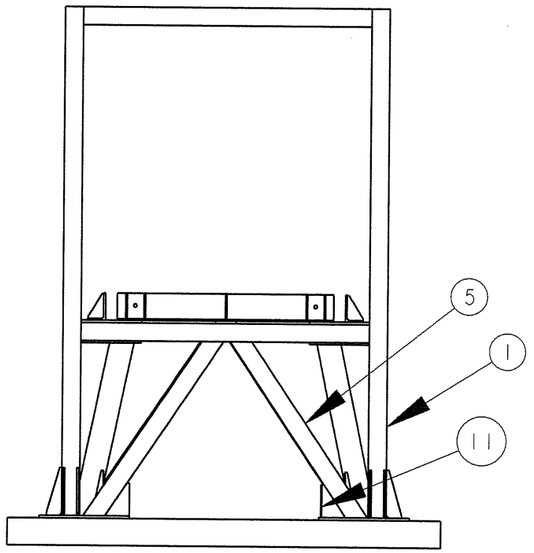

NO.	DRAWING NO.	DESCRIPTION
1	25H1472	112" CAGE TUBE
2	25H1482	64" CAGE TUBE
3	25H1492	30" CAGE TUBE
4	25H1502	18½" CAGE TUBE
5	25H1512	CAGE BRACE
6	25H1522	CAGE STRUT
7	25H1532	CAGE PLATE TOP
8	25H1542	CAGE PLATE BOTTOM
9	25H1552	BASE PLATE
10	25H1562	BASE GUSSET A
11	25H1572	BASE GUSSET B
12	25H1582	BASE GUSSET C
13	25H1592	BASE GUSSET D
14	25H1622	EXTRUDED ANGLE
15	25H1632	EXTRUDED ANGLE GUSSET
16	25H1652	LOAD CELL MOUNTING PLATE
17	n/a	LOAD CELL
18	n/a	CONCRETE PAD

UNLESS OTHERWISE SPECIFIED

TOLERANCES

X.X ± 0.1	FRAC. ± 1/64
X.XX ± 0.03	Angles ± 1.00°
X.XXX ± 0.010	FINISH 125 √(µin)

DO NOT SCALE PRINT

THREADS ARE CLASS 2
CHAMFER ENDS OF ALL SCREW TREADS 30°
CUT ROUND, 1.5 THREAD RELIEF ON MACHINED THREADS
BREAK EDGES .016 MAX. ON MACHINED WORK
REMOVE BURRS, WELD SPLATTER & LOOSE SCALE
IN ACCORDANCE WITH ASME Y14.5M & B46.1

SHOP ORDERS

ACCT NO.	NO. REQD	SER NO.	-
DEL TO		DATE ISSD	-
SURFACE TREATMT		DATE REQD	-
IDENT METHOD TAG			
PROJECT NUMBER N/A			
PROJECT NAME N/A			
DWG BY T. LOEW		DATE 08-Aug-03	
CHK BY		DATE	
APR BY		DATE	

ERNEST ORLANDO LAWRENCE BERKELEY NATIONAL LABORATORY
UNIVERSITY OF CALIFORNIA - BERKELEY

DESIGNWORKS ROCKSTAND
ASSEMBLY DRAWING

MICROFILMED:	DWG. TYPE	SHOWN ON	SCALE: 3/100	DO NOT SCALE PRINTS
	ASSEM		SHEET 1 OF 2	
PATENT CLEAR:	DESIGN ACCT. NO.	CATEGORY CODE DW4212	DWG. NO. 25H1452	SIZE / REV. 1

Rev. 1/29/2000 J. R. Osborn

Dwg. File: 25H145 Model File: 25H145

DWG. NO.	SIZE	REV.	SH.
25H1452		1	2

DESCRIPTION	MATERIAL	MAT. LOCATION
-	-	-

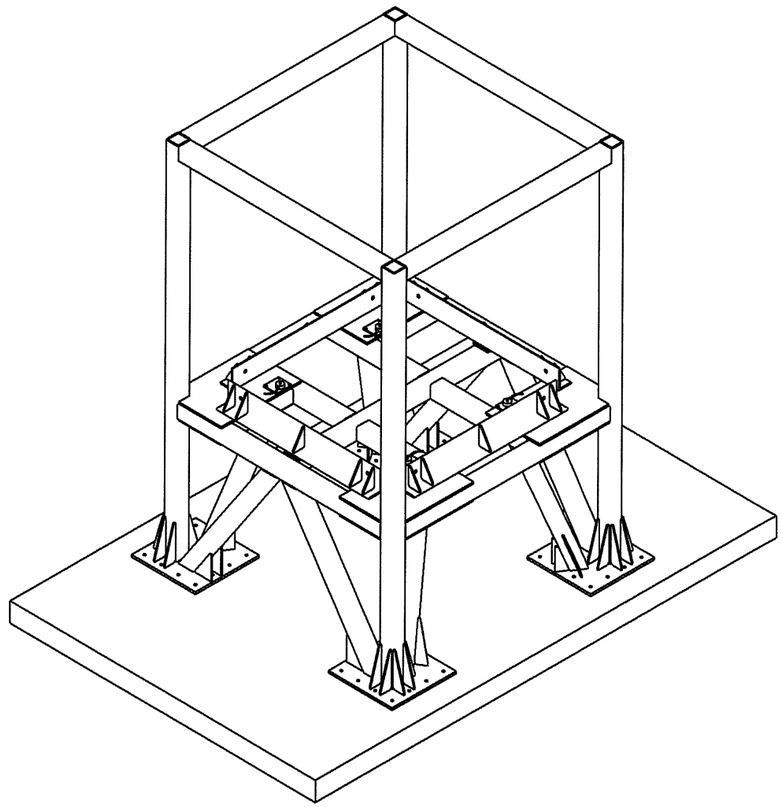

SCALE 3/100

UNLESS OTHERWISE SPECIFIED			SHOP ORDERS		SER NO. -
TOLERANCES	X.X ± 0.1	FRAC. ± 1/64	ACCT NO.	NO. REQD	DATE ISSD -
	X.XX ± 0.03	Angles ± 1.00°	DEL TO		DATE REQD -
	X.XXX ± 0.010	FINISH 125 √(µin)	SURFACE TREATMT		
DO NOT SCALE PRINT			IDENT METHOD TAG		
THREADS ARE CLASS 2			PROJECT NUMBER N/A		
CHAMFER ENDS OF ALL SCREW TREADS 30°			PROJECT NAME N/A		
CUT ROUND, 1.5 THREAD RELIEF ON MACHINED THREADS			DWG BY T. LOEW		DATE 08-Aug-03
BREAK EDGES .016 MAX. ON MACHINED WORK			CHK BY		DATE
REMOVE BURRS, WELD SPLATTER & LOOSE SCALE			APR BY		DATE
IN ACCORDANCE WITH ASME Y14.5M & B46.1					

ERNEST ORLANDO LAWRENCE
BERKELEY NATIONAL LABORATORY
UNIVERSITY OF CALIFORNIA - BERKELEY

DESIGNWORKS ROCKSTAND
ASSEMBLY DRAWING

MICROFILMED:	DWG. TYPE		SCALE: 1/50	DO NOT SCALE PRINTS
	ASSEM	SHOWN ON	SHEET 2 OF 2	
PATENT CLEAR:		CATEGORY CODE	DWG. NO.	SIZE / REV.
	DESIGN ACCT. NO.	DW4212	25H1452	1

Rev. 1/29/2000 J. R. Osborn

Dwg. File: 25H145 Model File: 25H145

DWG. NO.	SIZE	REV.	SH.
25h1472		1	1

DESCRIPTION	MATERIAL	MAT. LOCATION
4x4 RECTANGULAR TUBING	A500B STEEL	-

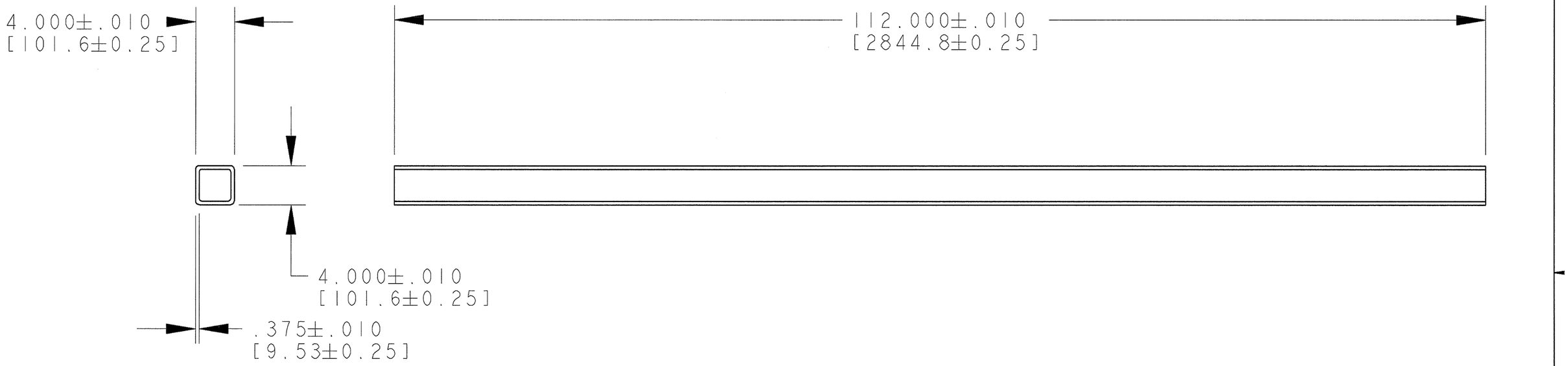

REV	DWG	CHK	ZONE	DATE	CHANGES

UNLESS OTHERWISE SPECIFIED

TOLERANCES		
	X.X ± 0.1	FRAC. ± 1/64
	X.XX ± 0.03	Angles ± 1.00°
	X.XXX ± 0.010	FINISH 125 √(µin)

DO NOT SCALE PRINT

THREADS ARE CLASS 2
CHAMFER ENDS OF ALL SCREW TREADS 30°
CUT ROUND, 1.5 THREAD RELIEF ON MACHINED THREADS
BREAK EDGES .016 MAX. ON MACHINED WORK
REMOVE BURRS, WELD SPLATTER & LOOSE SCALE
IN ACCORDANCE WITH ASME Y14.5M & B46.1

SHOP ORDERS

ACCT NO.		NO. REQD 4	DATE ISSD -
DEL TO			DATE REQD -
SURFACE TREATMT			
IDENT METHOD	TAG		
PROJECT NUMBER	N/A		
PROJECT NAME	N/A		
DWG BY	T.Loew		DATE 06-Aug-03
CHK BY	None		DATE
APR BY	None		DATE

SER NO. -

ERNEST ORLANDO LAWRENCE
BERKELEY NATIONAL LABORATORY
UNIVERSITY OF CALIFORNIA - BERKELEY

DESIGNWORKS ROCKSTAND
CAGE MEMBER
112" TUBE

MICROFILMED:	DWG. TYPE	SHOWN ON	SCALE: 1/10	DO NOT SCALE PRINTS
	PART	25H145	SHEET 1 OF 1	
PATENT CLEAR:	DESIGN ACCT. NO.	CATEGORY CODE	DWG. NO.	SIZE / REV.
	UC4105	DW4212	25h147	2 / 1

Rev. 1/29/2000 J. P. Osborn

Dwg. File: 25H147 Model File: 25H147

DWG. NO.	SIZE	REV.	SH.
25H1482		1	1

DESCRIPTION	MATERIAL	MAT. LOCATION
4x4 RECTANGULAR TUBING	A500B STEEL	-

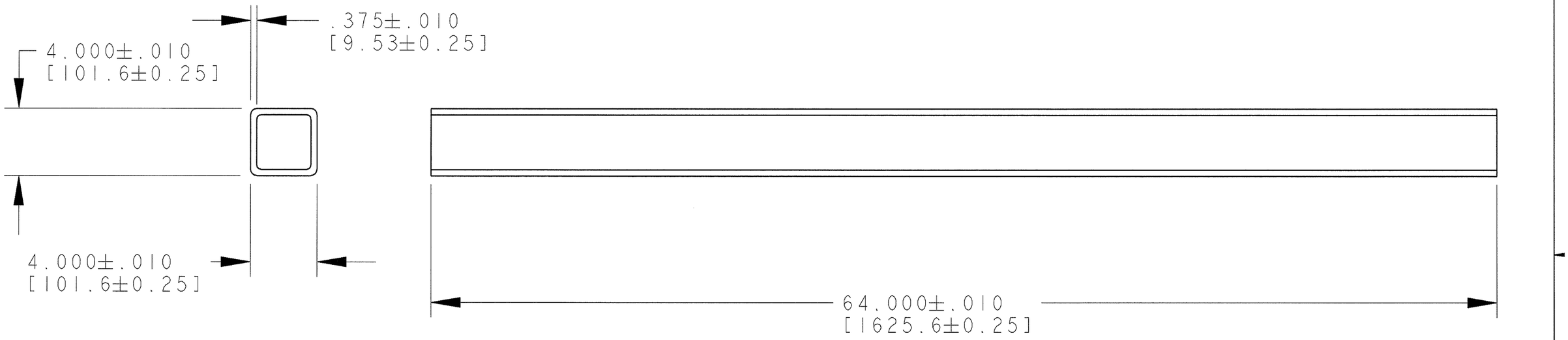

UNLESS OTHERWISE SPECIFIED

TOLERANCES

X.X ± 0.1	FRAC. ± 1/64
X.XX ± 0.03	Angles ± 1.00°
X.XXX ± 0.010	FINISH 125 √(µin)

DO NOT SCALE PRINT

THREADS ARE CLASS 2
CHAMFER ENDS OF ALL SCREW TREADS 30°
CUT ROUND, 1.5 THREAD RELIEF ON MACHINED THREADS
BREAK EDGES .016 MAX. ON MACHINED WORK
REMOVE BURRS, WELD SPLATTER & LOOSE SCALE
IN ACCORDANCE WITH ASME Y14.5M & B46.1

SHOP ORDERS

ACCT NO.	NO. REQD 9	SER NO.	-
DEL TO		DATE ISSD	-
SURFACE TREATMT		DATE REQD	-
IDENT METHOD	TAG		
PROJECT NUMBER	N/A		
PROJECT NAME	N/A		
DWG BY	T. LOEW	DATE	07-Aug-03
CHK BY	None	DATE	
APR BY	None	DATE	

REV	DWG	CHK	ZONE	DATE	CHANGES

ERNEST ORLANDO LAWRENCE
BERKELEY NATIONAL LABORATORY
UNIVERSITY OF CALIFORNIA - BERKELEY

DESIGNWORKS ROCKSTAND
CAGE MEMBER
64" TUBING

MICROFILMED:	DWG. TYPE	SHOWN ON	SCALE: 1/100	DO NOT SCALE PRINTS
	PART	25H145	SHEET 1 OF 1	
PATENT CLEAR:	DESIGN ACCT. NO.	CATEGORY CODE	DWG. NO.	SIZE / REV.
	UC4105	DW4212	25H148	2 / 1

Rev. 1/29/2000 J. R. Osborn

Dwg. File: 25H148 Model File: 25H148

DWG. NO.	SIZE	REV.	SH.
25H1492		1	1

DESCRIPTION	MATERIAL	MAT. LOCATION
4x4 RECTANGULAR TUBING	A500B STEEL	-

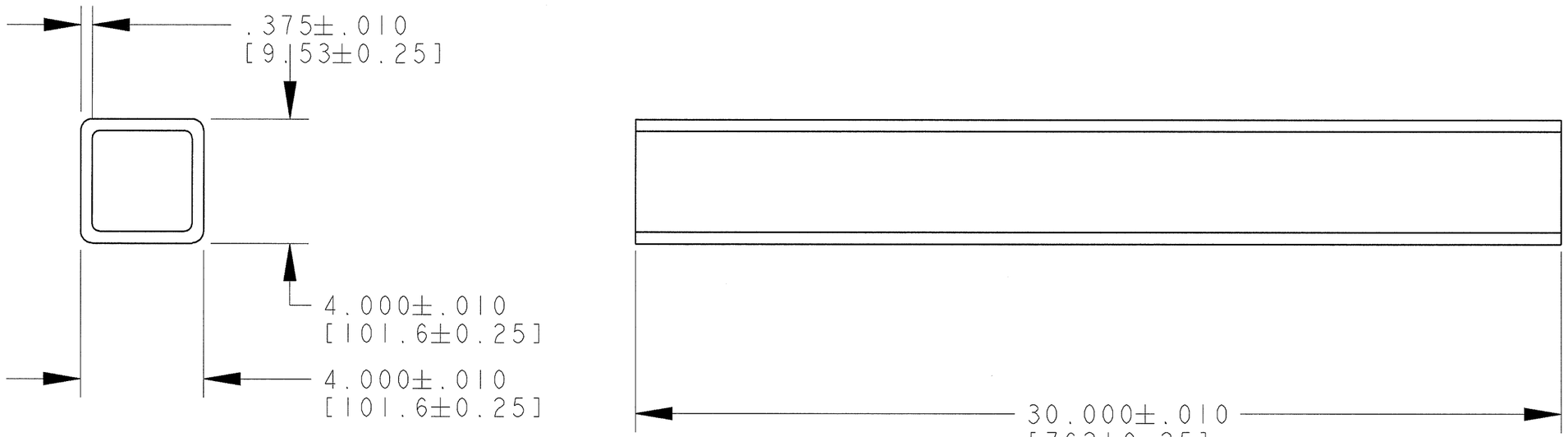

REV	DWG	CHK	ZONE	DATE	CHANGES

UNLESS OTHERWISE SPECIFIED

TOLERANCES		
	X.X ± 0.1	FRAC. ± 1/64
	X.XX ± 0.03	Angles ± 1.00°
	X.XXX ± 0.010	FINISH 125√(µin)

DO NOT SCALE PRINT

THREADS ARE CLASS 2
CHAMFER ENDS OF ALL SCREW TREADS 30°
CUT ROUND, 1.5 THREAD RELIEF ON MACHINED THREADS
BREAK EDGES .016 MAX. ON MACHINED WORK
REMOVE BURRS, WELD SPLATTER & LOOSE SCALE
IN ACCORDANCE WITH ASME Y14.5M & B46.1

SHOP ORDERS

ACCT NO.	NO. REQD 4	DATE ISSD	-
DEL TO		DATE REQD	-
SURFACE TREATMT			
IDENT METHOD	TAG		
PROJECT NUMBER	N/A		
PROJECT NAME	N/A		
DWG BY	T. LOEW	DATE	07-Aug-03
CHK BY	None	DATE	
APR BY	None	DATE	

SER NO. -

ERNEST ORLANDO LAWRENCE
BERKELEY NATIONAL LABORATORY
UNIVERSITY OF CALIFORNIA - BERKELEY

DESIGNWORKS ROCKSTAND
CAGE MEMBER
30" TUBE

MICROFILMED:	DWG. TYPE	SHOWN ON	SCALE: 1/4	DO NOT SCALE PRINTS
	PART	25H145	SHEET 1 OF 1	
PATENT CLEAR:	DESIGN ACCT. NO.	CATEGORY CODE	DWG. NO.	SIZE / REV.
	UC4105	DW4212	25H149	2 / 1

Rev. 1/29/2009 J. R. Osborn

Dwg. File: 25H149 Model File: 25H149

DWG. NO.	SIZE	REV.	SH.
25H1502		1	1

DESCRIPTION	MATERIAL	MAT. LOCATION
4x4 RECTANGULAR TUBING	A500B STEEL	-

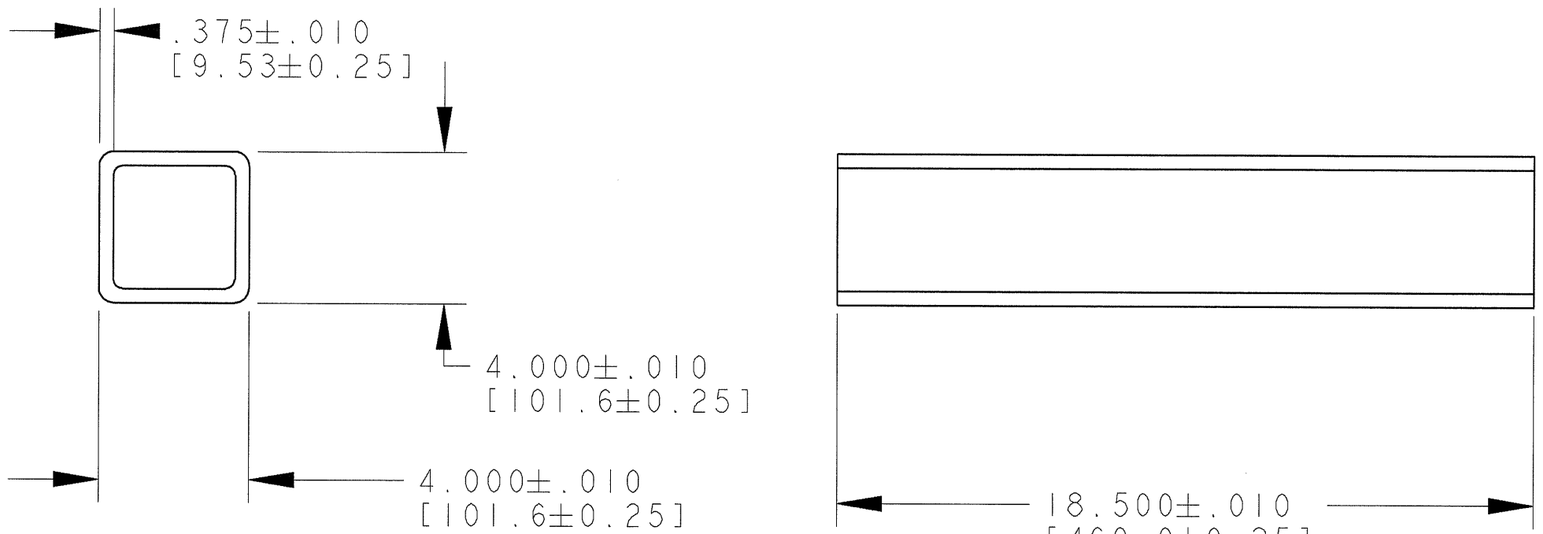

REV	DWG	CHK	ZONE	DATE	CHANGES

UNLESS OTHERWISE SPECIFIED

TOLERANCES		
	X.X ± 0.1	FRAC. ± 1/64
	X.XX ± 0.03	Angles ± 1.00°
	X.XXX ± 0.010	FINISH 125 √(µin)

DO NOT SCALE PRINT

THREADS ARE CLASS 2
CHAMFER ENDS OF ALL SCREW TREADS 30°
CUT ROUND, 1.5 THREAD RELIEF ON MACHINED THREADS
BREAK EDGES .016 MAX. ON MACHINED WORK
REMOVE BURRS, WELD SPLATTER & LOOSE SCALE
IN ACCORDANCE WITH ASME Y14.5M & B46.1

SHOP ORDERS

SER NO.	-		
ACCT NO.		NO. REQD 4	
DATE ISSD	-		
DEL TO		DATE REQD	-
SURFACE TREATMT	-		
IDENT METHOD	TAG		
PROJECT NUMBER	N/A		
PROJECT NAME	N/A		
DWG BY	T. LOEW	DATE	07-Aug-03
CHK BY	None	DATE	
APR BY	None	DATE	

ERNEST ORLANDO LAWRENCE BERKELEY NATIONAL LABORATORY
UNIVERSITY OF CALIFORNIA - BERKELEY

DESIGNWORKS ROCKSTAND
CAGE MEMBER
18.5" TUBE

MICROFILMED:	DWG. TYPE	SHOWN ON	SCALE: 1/4	DO NOT SCALE PRINTS
	PART	25H145	SHEET 1 OF 1	
PATENT CLEAR:	DESIGN ACCT. NO.	CATEGORY CODE DW4212	DWG. NO. 25H150	SIZE 2 / REV. 1

Rev. 1/29/2000 J. R. Osborn

Dwg. File: 25H150 Model File: 25H150

4x4 RECTANGULAR TUBING	A500B STEEL	-

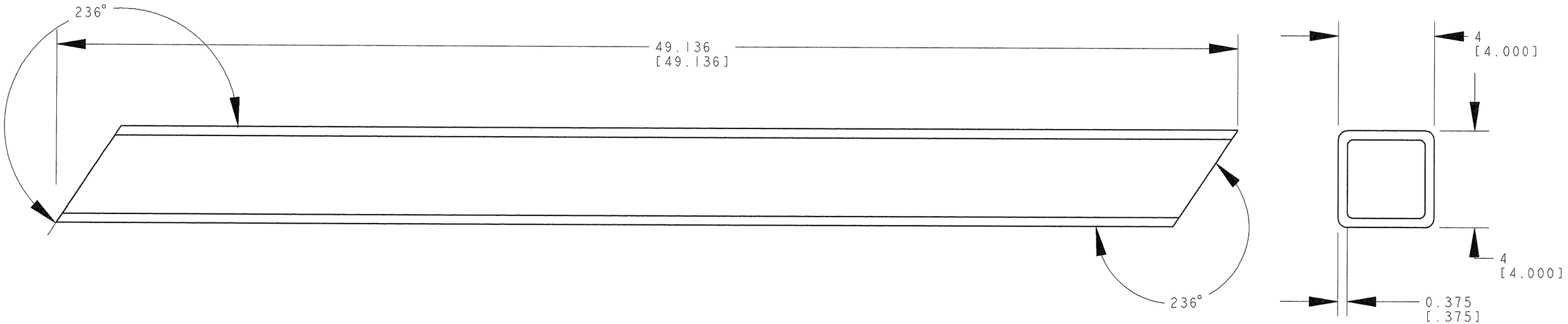

REV	DWG	CHK	ZONE	DATE	CHANGES

UNLESS OTHERWISE SPECIFIED

TOLERANCES:
- X.X ± 0.1
- FRAC. ± 1/64
- X.XX ± 0.03
- Angles ± 1.00°
- X.XXX ± 0.010
- FINISH 125

DO NOT SCALE PRINT

THREADS ARE CLASS 2
CHAMFER ENDS OF ALL SCREW TREADS 30°
CUT ROUND, 1.5 THREAD RELIEF ON MACHINED THREADS
BREAK EDGES .016 MAX. ON MACHINED WORK
REMOVE BURRS, WELD SPLATTER & LOOSE SCALE
IN ACCORDANCE WITH ASME Y14.5M & B46.1

SHOP ORDERS

ACCT NO. UC4105	NO. REQD 4	SER NO. -	
DEL TO		DATE ISSD -	
		DATE REQD -	
SURFACE TREATMT			
IDENT METHOD TAG			
PROJECT NUMBER N/A			
PROJECT NAME N/A			
DWG BY T. LOEW		DATE 22-May-03	
CHK BY		DATE	
APR BY		DATE	

ERNEST ORLANDO LAWRENCE
BERKELEY NATIONAL LABORATORY
UNIVERSITY OF CALIFORNIA - BERKELEY

DESIGNWORKS ROCKSTAND
CAGE BRACE

MICROFILMED:	DWG. TYPE	SHOWN ON	SCALE: 1/4	DO NOT SCALE PRINTS
	PART	25H145	SHEET 1 OF 1	
PATENT CLEAR:	DESIGN ACCT. NO.	CATEGORY CODE	DWG. NO.	SIZE / REV.
	UC4105	DW4212	25H151	2 / 1

Rev. 1/29/2003 J. R. Osborn

Dwg. File: 25H151 Model File: 25H151

DWG. NO.	SIZE	REV.	SH.
25H1522	1	1	

DESCRIPTION	MATERIAL	MAT. LOCATION
4x4 RECTANGULAR A36 TUBING	A500B STEEL	-

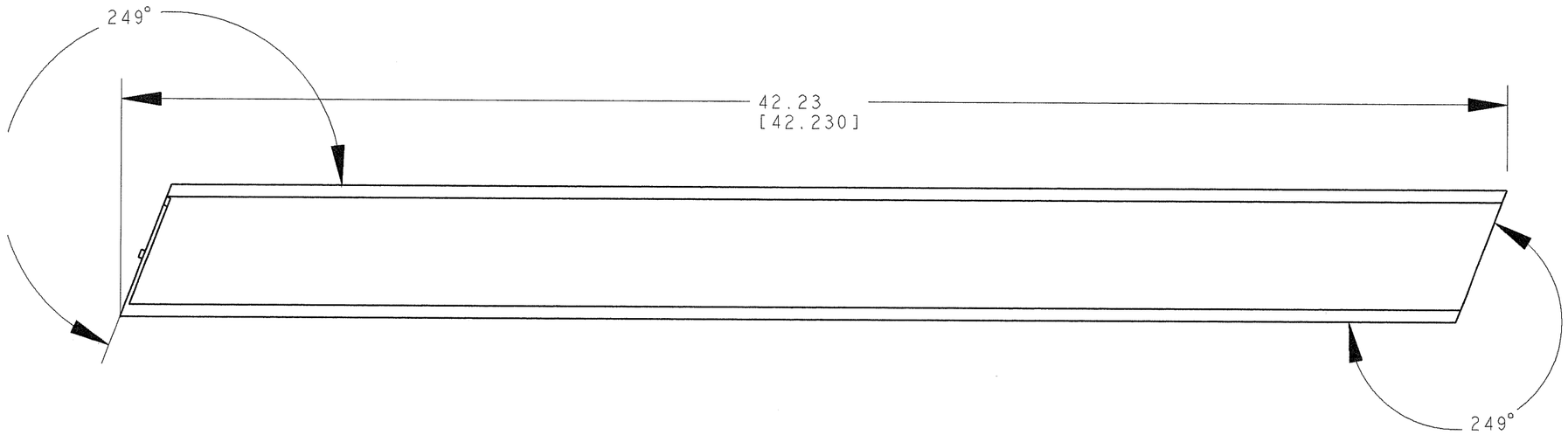

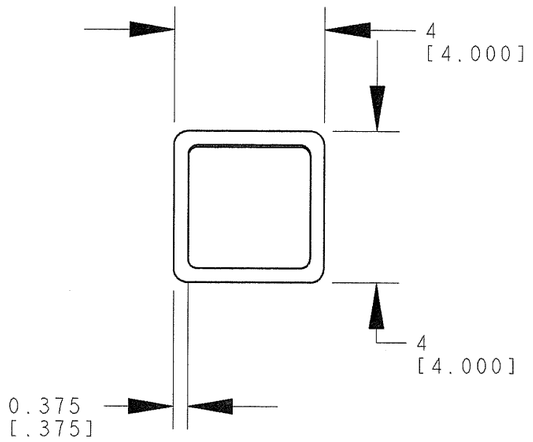

REV	DWG	CHK	ZONE	DATE	CHANGES

UNLESS OTHERWISE SPECIFIED

TOLERANCES		
	X.X ± 0.1	FRAC. ± 1/64
	X.XX ± 0.03	Angles ± 1.00°
	X.XXX ± 0.010	FINISH 125

DO NOT SCALE PRINT

THREADS ARE CLASS 2
CHAMFER ENDS OF ALL SCREW TREADS 30°
CUT ROUND, 1.5 THREAD RELIEF ON MACHINED THREADS
BREAK EDGES .016 MAX. ON MACHINED WORK
REMOVE BURRS, WELD SPLATTER & LOOSE SCALE
IN ACCORDANCE WITH ASME Y14.5M & B46.1

SHOP ORDERS

ACCT NO. UC4105	NO. REQD 4	SER NO. -	
DEL TO		DATE ISSD -	
		DATE REQD -	
SURFACE TREATMT			
IDENT METHOD TAG			
PROJECT NUMBER N/A			
PROJECT NAME N/A			
DWG BY T.LOEW		DATE 22-May-03	
CHK BY		DATE	
APR BY		DATE	

ERNEST ORLANDO LAWRENCE
BERKELEY NATIONAL LABORATORY
UNIVERSITY OF CALIFORNIA - BERKELEY

DESIGNWORKS ROCKSTAND
CAGE STRUT

MICROFILMED:	DWG. TYPE	SHOWN ON	SCALE: 1/4	DO NOT SCALE PRINTS
	PART	25H145	SHEET 1 OF 1	
PATENT CLEAR:	DESIGN ACCT. NO.	CATEGORY CODE	DWG. NO. 25H1522 SIZE	REV. 1
	UC4105	DW4212		

Rev. 1/29/2000 J. R. Osborn

Dwg. File: 25H152 Model File: 25H152

DWG. NO.	SIZE	REV.	SH.
25H1532		1	1

DESCRIPTION	MATERIAL	MAT. LOCATION
0.5 inch stock plate	A36 Steel	-

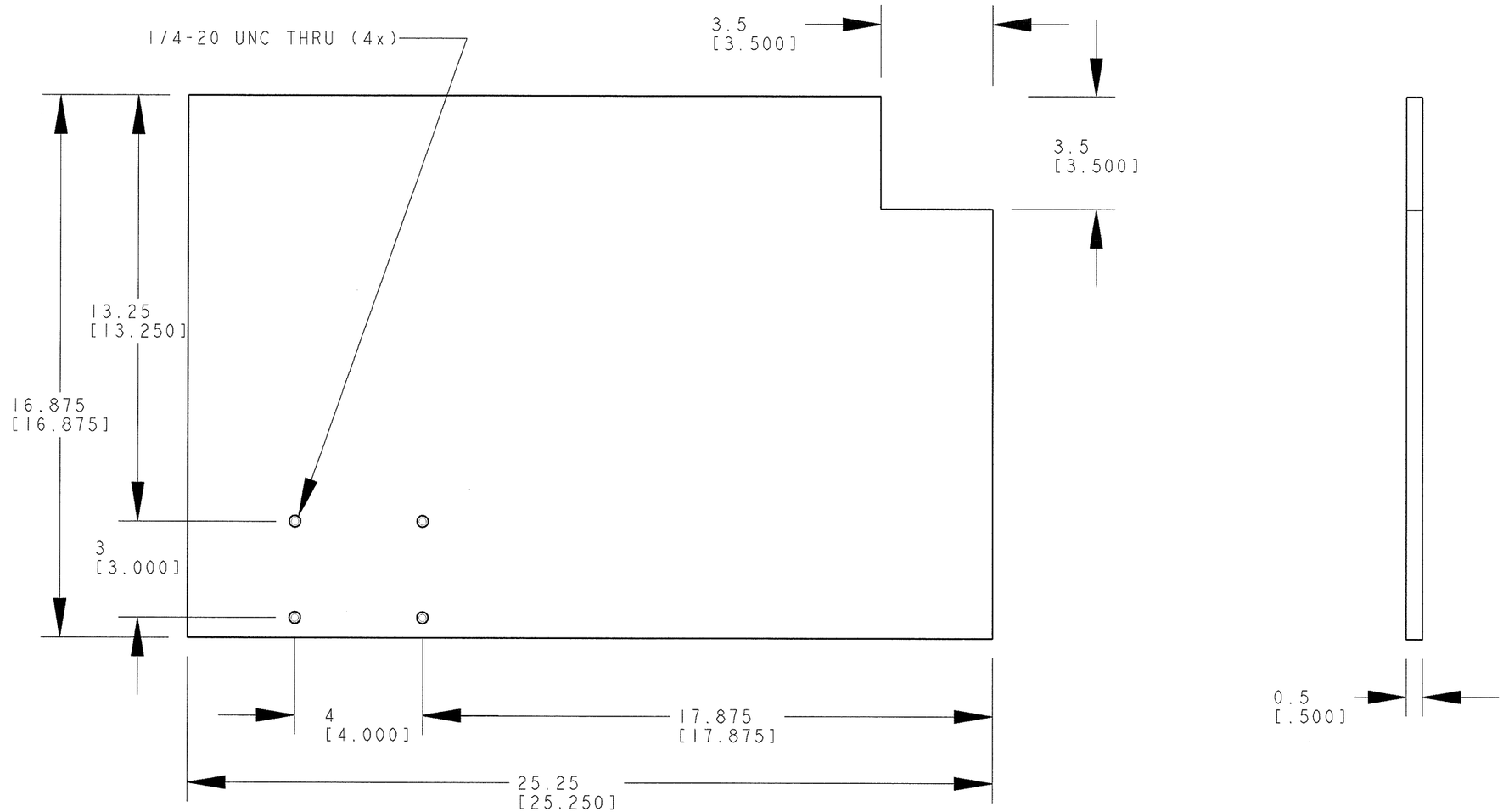

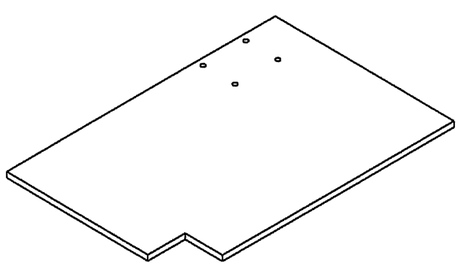

SCALE 1/10

UNLESS OTHERWISE SPECIFIED			SHOP ORDERS			SER NO. -
TOLERANCES	X.X ± 0.1	FRAC. ± 1/64	ACCT NO. UC4105	NO. REQD 4	DATE ISSD -	
	X.XX ± 0.03	Angles ± 1.00°	DEL TO		DATE REQD -	
	X.XXX ± 0.010	FINISH 125	SURFACE TREATMT			
DO NOT SCALE PRINT			IDENT METHOD TAG			
			PROJECT NUMBER N/A			
			PROJECT NAME N/A			
			DWG BY T.Loew		DATE 23-May-03	
			CHK BY None		DATE	
			APR BY None		DATE	

THREADS ARE CLASS 2
CHAMFER ENDS OF ALL SCREW TREADS 30°
CUT ROUND, 1.5 THREAD RELIEF ON MACHINED THREADS
BREAK EDGES .016 MAX. ON MACHINED WORK
REMOVE BURRS, WELD SPLATTER & LOOSE SCALE
IN ACCORDANCE WITH ASME Y14.5M & B46.1

ERNEST ORLANDO LAWRENCE
BERKELEY NATIONAL LABORATORY
UNIVERSITY OF CALIFORNIA - BERKELEY

DesignWorks Rockstand
Main Structure
Cage Plate Top

MICROFILMED:	DWG. TYPE	SHOWN ON	SCALE: 1/4	DO NOT SCALE PRINTS
	PART		SHEET 1 OF 1	
PATENT CLEAR:	DESIGN ACCT. NO.	CATEGORY CODE	DWG. NO.	SIZE / REV.
	UC4105	DW4212	25H153	2 / 1

Rev. 1/28/2000 J. R. Dobral

Dwg. File: 25H153 Model File: 25H153

DWG. NO.	SIZE	REV.	SH.
25H1542		1	1

DESCRIPTION	MATERIAL	MAT. LOCATION
0.5 inch stock plate	A36 Steel	-

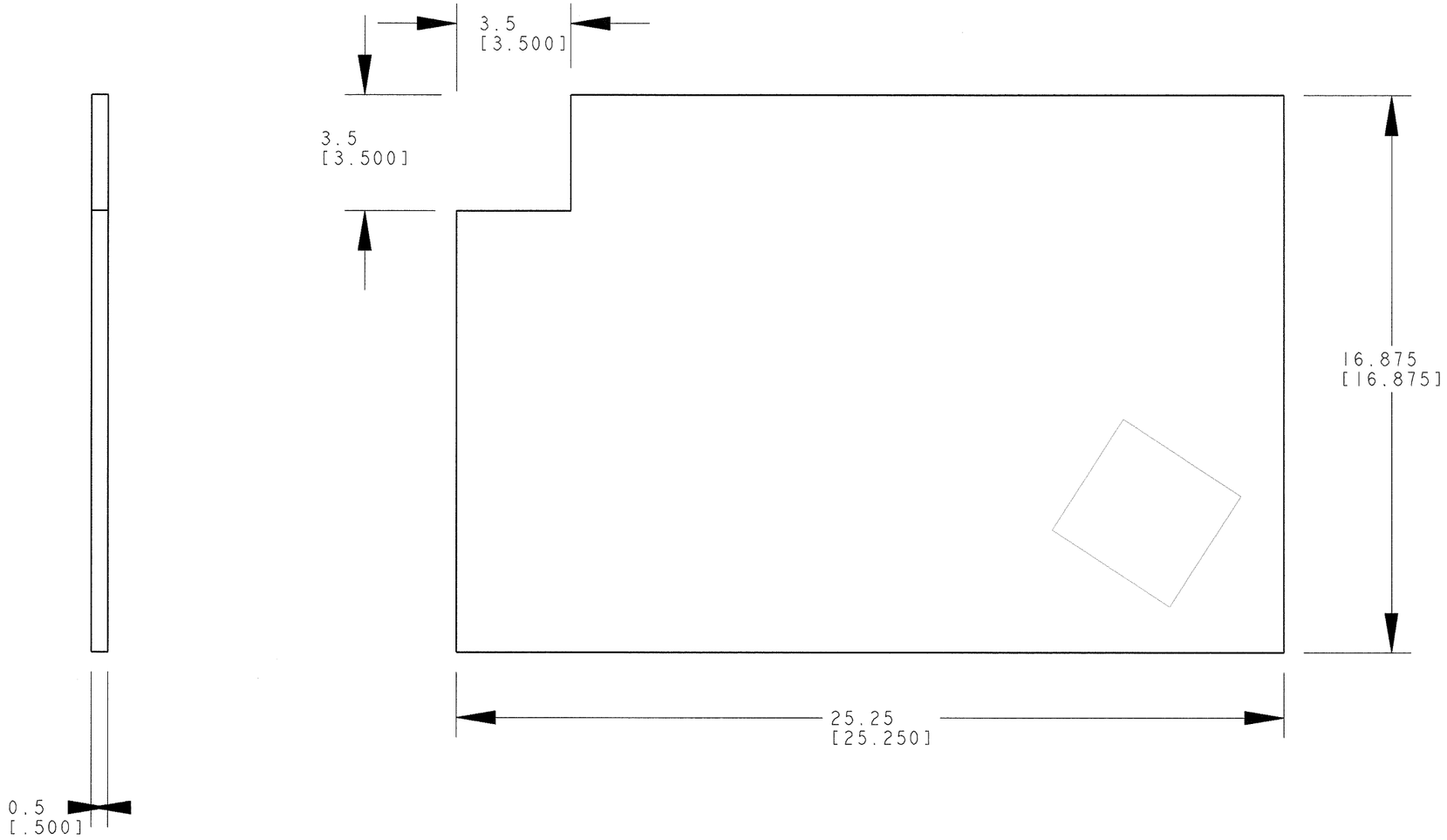

UNLESS OTHERWISE SPECIFIED			SHOP ORDERS		SER NO. -
TOLERANCES	X.X ± 0.1	FRAC. ± 1/64	ACCT NO.	NO. REQD 4	DATE ISSD -
	X.XX ± 0.03	Angles ± 1.00°	DEL TO		DATE REQD -
	X.XXX ± 0.010	FINISH 125	SURFACE TREATMT -		
DO NOT SCALE PRINT			IDENT METHOD TAG		
THREADS ARE CLASS 2			PROJECT NUMBER N/A		
CHAMFER ENDS OF ALL SCREW TREADS 30°			PROJECT NAME N/A		
CUT ROUND, 1.5 THREAD RELIEF ON MACHINED THREADS			DWG BY T. Loew		DATE 23-May-03
BREAK EDGES .016 MAX. ON MACHINED WORK			CHK BY None		DATE
REMOVE BURRS, WELD SPLATTER & LOOSE SCALE			APR BY None		DATE
IN ACCORDANCE WITH ASME Y14.5M & B46.1					

ERNEST ORLANDO LAWRENCE
BERKELEY NATIONAL LABORATORY
UNIVERSITY OF CALIFORNIA - BERKELEY

DesignWorks Rockstand
Main Structure
Cage Plate Bottom

MICROFILMED:	DWG. TYPE	SHOWN ON	SCALE: 1/4	DO NOT SCALE PRINTS
	PART		SHEET 1 OF 1	
PATENT CLEAR:	DESIGN ACCT. NO.	CATEGORY CODE	DWG. NO.	SIZE / REV.
	UC4105	DW4212	25H154	2 / 1

Rev. 1/29/2000 J. R. Osborn

Dwg. File: 25H154 Model File: 25H154

DWG. NO.	SIZE	REV.	SH.
25H1552	1	1	

DESCRIPTION	MATERIAL	MAT. LOCATION
	A36 STEEL PLATE	-

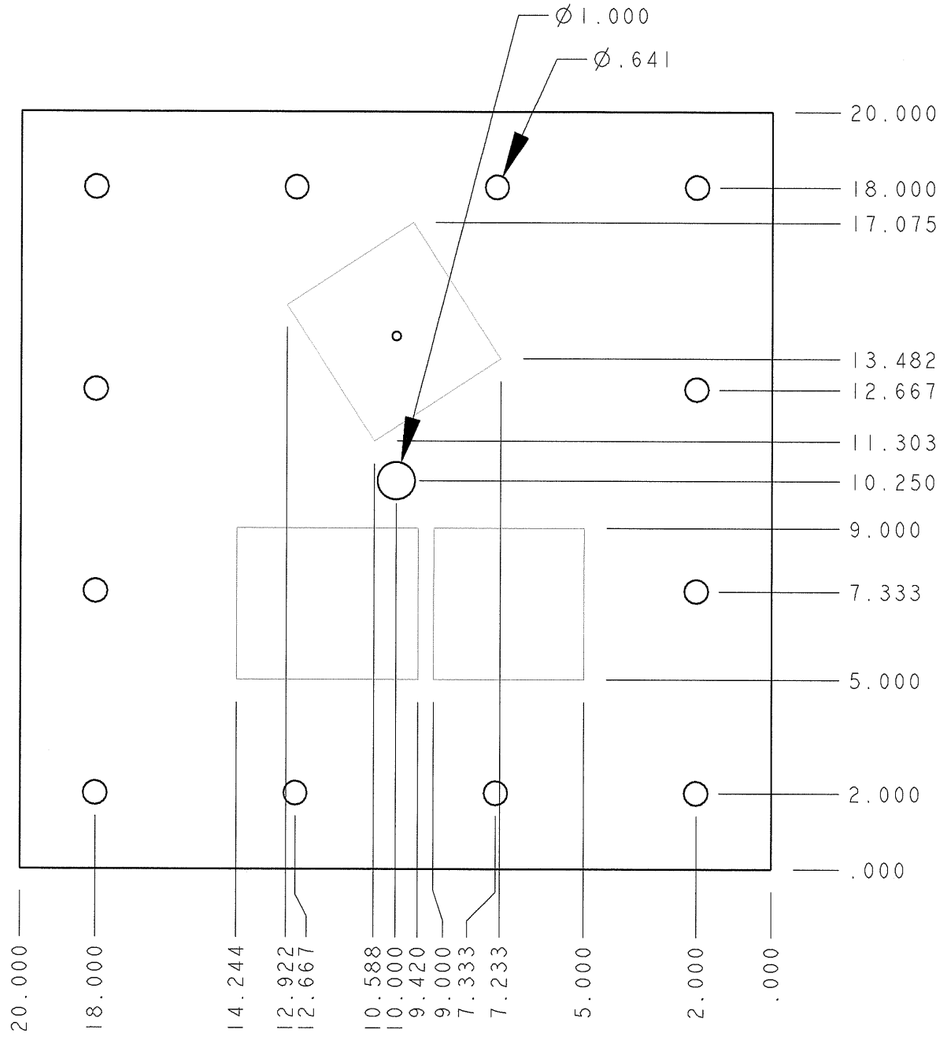

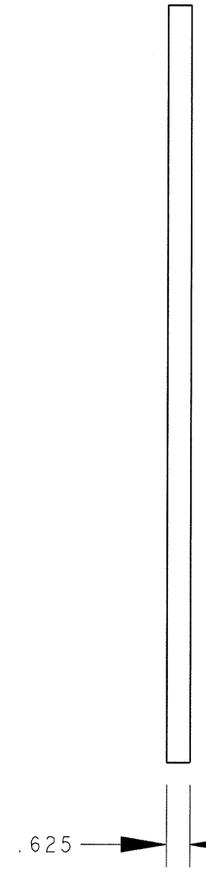

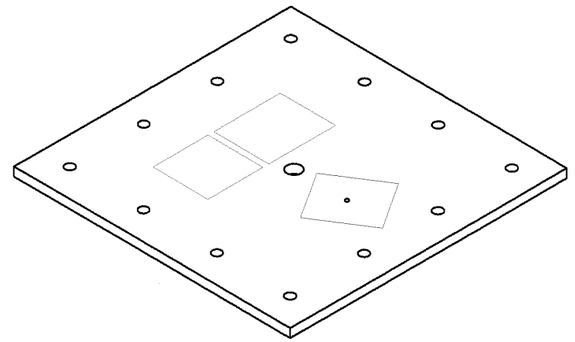

SCALE 13/100

SCALE 1/4

REV	DWG	CHK	ZONE	DATE	CHANGES

UNLESS OTHERWISE SPECIFIED

TOLERANCES		
	X.X ± 0.1	FRAC. ± 1/64
	X.XX ± 0.03	Angles ± 1.00°
	X.XXX ± 0.010	FINISH 125 √(µin)

DO NOT SCALE PRINT

THREADS ARE CLASS 2
CHAMFER ENDS OF ALL SCREW TREADS 30°
CUT ROUND, 1.5 THREAD RELIEF ON MACHINED THREADS
BREAK EDGES .016 MAX. ON MACHINED WORK
REMOVE BURRS, WELD SPLATTER & LOOSE SCALE
IN ACCORDANCE WITH ASME Y14.5M & B46.1

SHOP ORDERS

SER NO.	-		
ACCT NO.		NO. REQD	4
DATE ISSD	-		
DEL TO	T. LOEW	DATE REQD	-
SURFACE TREATMT			
IDENT METHOD	TAG		
PROJECT NUMBER	N/A		
PROJECT NAME	N/A		
DWG BY	F. ANGLISS	DATE	08-Aug-03
CHK BY		DATE	
APR BY		DATE	

ERNEST ORLANDO LAWRENCE BERKELEY NATIONAL LABORATORY
UNIVERSITY OF CALIFORNIA - BERKELEY

DESIGNWORKS ROCKSTAND
FOOTINGS
BASEPLATE

MICROFILMED:	DWG. TYPE	SHOWN ON	DO NOT SCALE PRINTS
	PART	25H145	SHEET 1 OF 1
PATENT CLEAR:	DESIGN ACCT. NO.	CATEGORY CODE	DWG. NO. / SIZE / REV.
		DW4212	25H155 / 2 / 1

Rev. 1/29/2000 J. R. Osborn

Dwg. File: 25H155 Model File: 25H155

DWG. NO.	SIZE	REV.	SH.
25H1562	1	1	

DESCRIPTION	MATERIAL	MAT. LOCATION
0.375" PLATE STOCK	A36	-

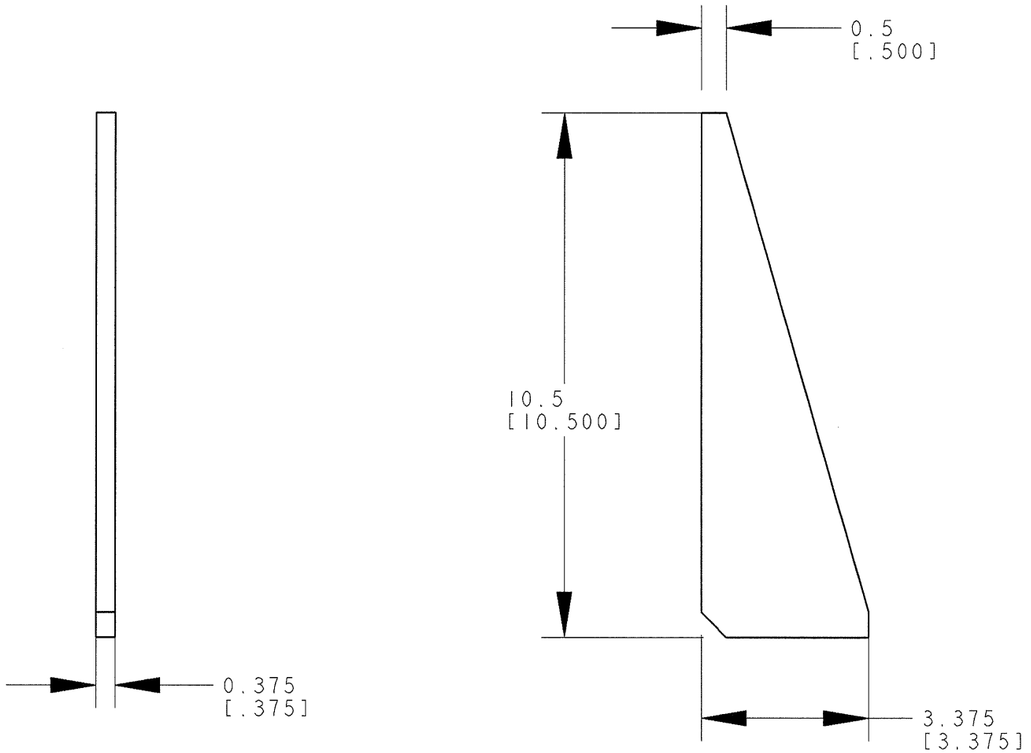

SCALE 33/100

REV	DWG	CHK	ZONE	DATE	CHANGES

UNLESS OTHERWISE SPECIFIED

TOLERANCES		
	X.X ± 0.1	FRAC. ± 1/64
	X.XX ± 0.03	Angles ± 1.00°
	X.XXX ± 0.010	FINISH 125 √(µin)

DO NOT SCALE PRINT

THREADS ARE CLASS 2
CHAMFER ENDS OF ALL SCREW TREADS 30°
CUT ROUND, 1.5 THREAD RELIEF ON MACHINED THREADS
BREAK EDGES .016 MAX. ON MACHINED WORK
REMOVE BURRS, WELD SPLATTER & LOOSE SCALE
IN ACCORDANCE WITH ASME Y14.5M & B46.1

SHOP ORDERS

SER NO.	-		
ACCT NO.		NO. REQD	24
DATE ISSD	-		
DEL TO		DATE REQD	-
SURFACE TREATMT			
IDENT METHOD	TAG		
PROJECT NUMBER	N/A		
PROJECT NAME	N/A		
DWG BY		DATE	29-May-03
CHK BY		DATE	
APR BY		DATE	

ERNEST ORLANDO LAWRENCE BERKELEY NATIONAL LABORATORY
UNIVERSITY OF CALIFORNIA - BERKELEY

DESIGNWORKS ROCKSTAND
BASE PLATE STIFFENERS
GUSSET A

MICROFILMED:	DWG. TYPE	SHOWN ON	SCALE: 33/100	DO NOT SCALE PRINTS
	PART		SHEET 1 OF 1	
PATENT CLEAR:	DESIGN ACCT. NO.	CATEGORY CODE	DWG. NO. 25H156	SIZE 2 / REV. 1

Rev. 1/29/2000 J. R. Osborn

Dwg. File: 25H156 Model File: 25H156

DWG. NO.	SIZE	REV.	SH.
25H1572		1	1

DESCRIPTION	MATERIAL	MAT. LOCATION
0.375 PLATE STOCK	A36	-

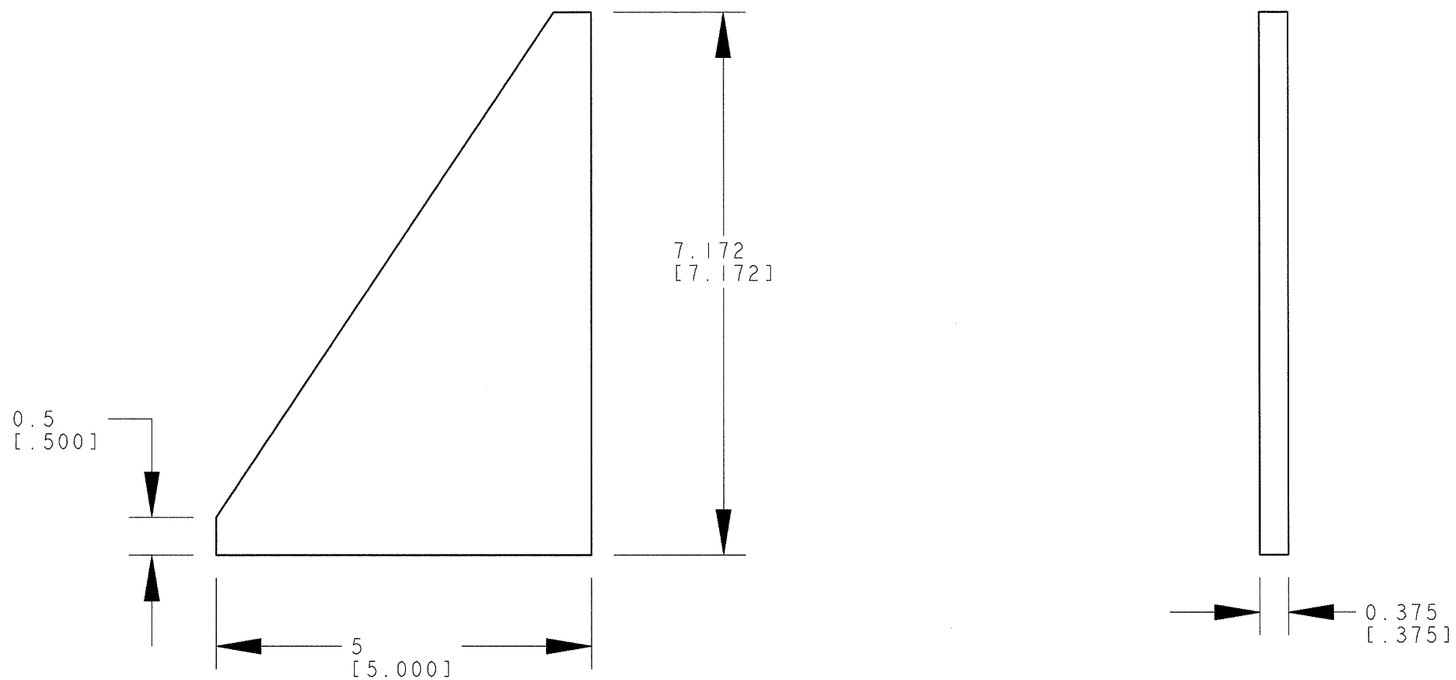

REV	DWG	CHK	ZONE	DATE	CHANGES

UNLESS OTHERWISE SPECIFIED

TOLERANCES		
	X.X ± 0.1	FRAC. ± 1/64
	X.XX ± 0.03	Angles ± 1.00°
	X.XXX ± 0.010	FINISH 125 √(μin)

DO NOT SCALE PRINT

THREADS ARE CLASS 2
CHAMFER ENDS OF ALL SCREW TREADS 30°
CUT ROUND, 1.5 THREAD RELIEF ON MACHINED THREADS
BREAK EDGES .016 MAX. ON MACHINED WORK
REMOVE BURRS, WELD SPLATTER & LOOSE SCALE
IN ACCORDANCE WITH ASME Y14.5M & B46.1

SHOP ORDERS

ACCT NO. UC4105	NO. REQD 8	SER NO. -	DATE ISSD -
DEL TO		DATE REQD -	
SURFACE TREATMT			
IDENT METHOD TAG			
PROJECT NUMBER N/A			
PROJECT NAME N/A			
DWG BY T. LOEW		DATE 29-May-03	
CHK BY		DATE	
APR BY		DATE	

ERNEST ORLANDO LAWRENCE BERKELEY NATIONAL LABORATORY
UNIVERSITY OF CALIFORNIA - BERKELEY

DESIGNWORKS ROCKSTAND
BASE PLATE STIFFENERS
GUSSET B

MICROFILMED:	DWG. TYPE PART	SHOWN ON	SCALE: 1/2	DO NOT SCALE PRINTS
PATENT CLEAR:	DESIGN ACCT. NO.	CATEGORY CODE	SHEET 1 OF 1	
			DWG. NO. 25H157	SIZE 2 / REV. 1

Dwg. File: 25H157 Model File: 25H157

Rev. 1/29/2000 J. R. Osborn

DWG. NO.	SIZE	REV.	SH.
25H1582		1	1

DESCRIPTION	MATERIAL	MAT. LOCATION
0.375 PLATE STOCK	A36	-

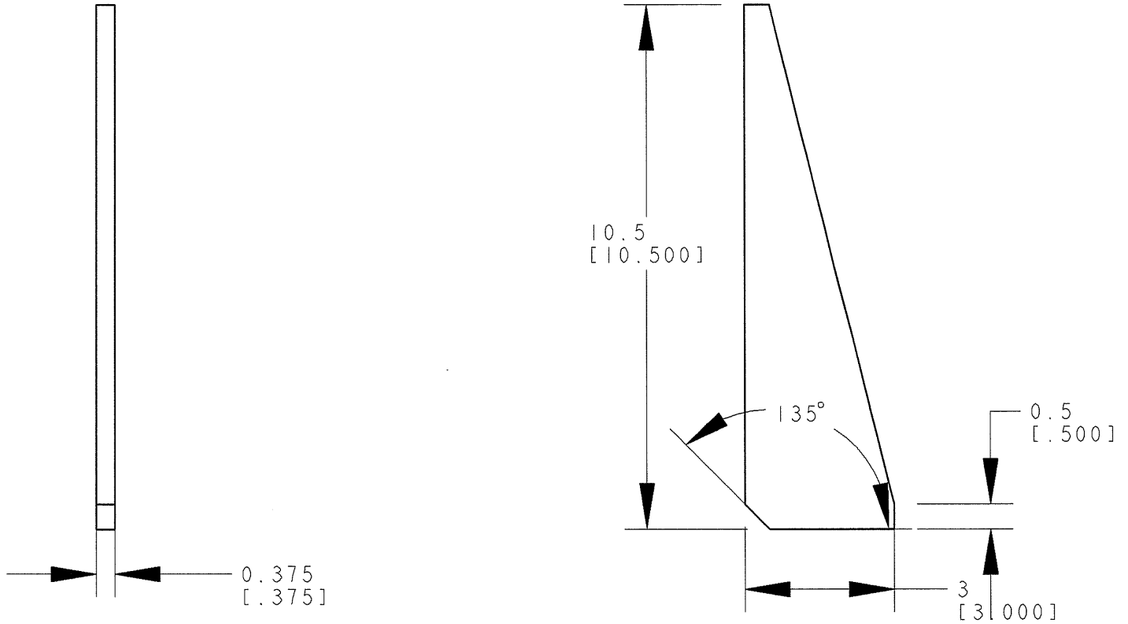

REV	DWG	CHK	ZONE	DATE	CHANGES

UNLESS OTHERWISE SPECIFIED

TOLERANCES		
	X.X ± 0.1	FRAC. ± 1/64
	X.XX ± 0.03	Angles ± 1.00°
	X.XXX ± 0.010	FINISH 125 √(μin)

DO NOT SCALE PRINT

THREADS ARE CLASS 2
CHAMFER ENDS OF ALL SCREW TREADS 30°
CUT ROUND, 1.5 THREAD RELIEF ON MACHINED THREADS
BREAK EDGES .016 MAX. ON MACHINED WORK
REMOVE BURRS, WELD SPLATTER & LOOSE SCALE
IN ACCORDANCE WITH ASME Y14.5M & B46.1

SHOP ORDERS

SER NO.	-		
ACCT NO.	UC4105	NO. REQD	8
DATE ISSD	-		
DEL TO		DATE REQD	-
SURFACE TREATMT	-		
IDENT METHOD	TAG		
PROJECT NUMBER	N/A		
PROJECT NAME	N/A		
DWG BY	T. LOEW	DATE	29-May-03
CHK BY		DATE	
APR BY		DATE	

ERNEST ORLANDO LAWRENCE BERKELEY NATIONAL LABORATORY
UNIVERSITY OF CALIFORNIA - BERKELEY

DESIGNWORKS ROCKSTAND
BASE PLATE STIFFENERS
GUSSET C

MICROFILMED:	DWG. TYPE	SHOWN ON	SCALE: 33/100	DO NOT SCALE PRINTS
	PART		SHEET 1 OF 1	
PATENT CLEAR:	DESIGN ACCT. NO.	CATEGORY CODE	DWG. NO. 25H158	SIZE 2 / REV. 1

Rev. 1/29/2000 J. R. Osborn

Dwg. File: 25H158 Model File: 25H158

DWG. NO.	SIZE	REV.	SH.
25H1592		1	1

DESCRIPTION	MATERIAL	MAT. LOCATION
0.375 PLATE STOCK	A36	-

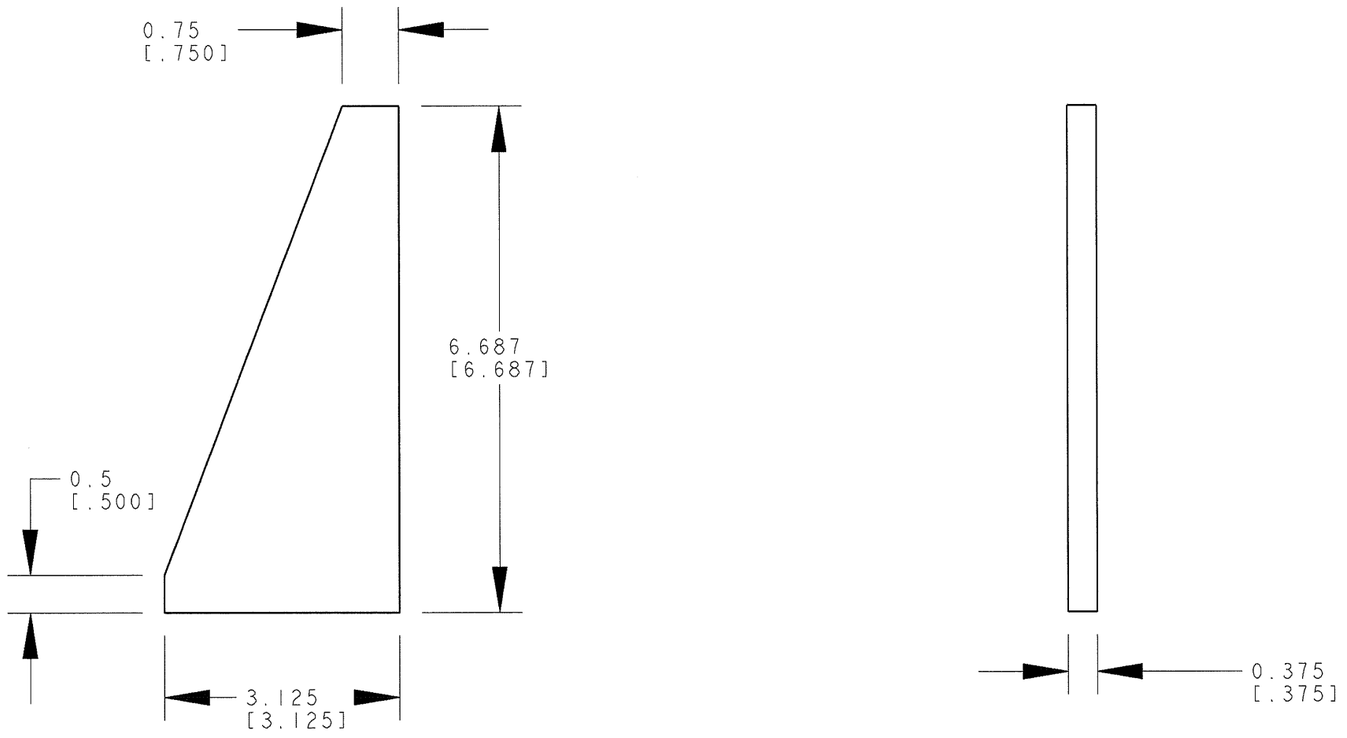

REV	DWG	CHK	ZONE	DATE	CHANGES

UNLESS OTHERWISE SPECIFIED

TOLERANCES		
	X.X ± 0.1	FRAC. ± 1/64
	X.XX ± 0.03	Angles ± 1.00°
	X.XXX ± 0.010	FINISH 125 √(µin)

DO NOT SCALE PRINT

THREADS ARE CLASS 2
CHAMFER ENDS OF ALL SCREW TREADS 30°
CUT ROUND, 1.5 THREAD RELIEF ON MACHINED THREADS
BREAK EDGES .016 MAX. ON MACHINED WORK
REMOVE BURRS, WELD SPLATTER & LOOSE SCALE
IN ACCORDANCE WITH ASME Y14.5M & B46.1

SHOP ORDERS

ACCT NO. UC4105	NO. REQD 8	SER NO.	-
DEL TO		DATE ISSD	-
SURFACE TREATMT		DATE REQD	-
IDENT METHOD TAG			
PROJECT NUMBER N/A			
PROJECT NAME N/A			
DWG BY T.LOEW	DATE 29-May-03		
CHK BY	DATE		
APR BY	DATE		

ERNEST ORLANDO LAWRENCE
BERKELEY NATIONAL LABORATORY
UNIVERSITY OF CALIFORNIA - BERKELEY

DESIGNWORKS ROCKSTAND
BASE PLATE STIFFENERS
GUSSET D

MICROFILMED:	DWG. TYPE	SHOWN ON	SCALE: 1/2	DO NOT SCALE PRINTS
	PART		SHEET 1 OF 1	
PATENT CLEAR:	DESIGN ACCT. NO.	CATEGORY CODE	DWG. NO. 25H159	SIZE 2 / REV. 1

Rev. 1/29/2000 J. R. Osborn

Dwg. File: 25H159 Model File: 25H159

DWG. NO.	SIZE	REV.	SH.
25H1602	1	1	1

DESCRIPTION	MATERIAL	MAT. LOCATION
.0187 SHIM STOCK	STAINLESS	-

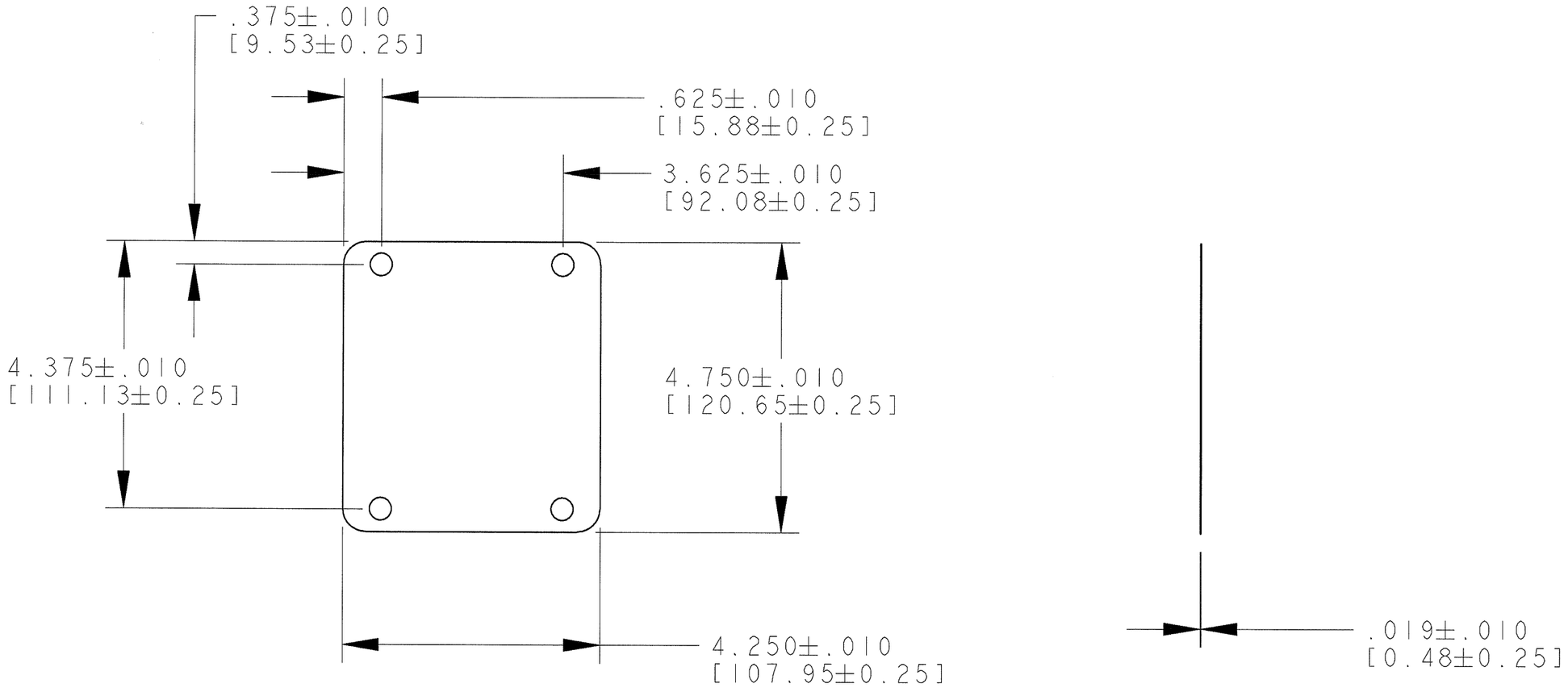

REV	DWG	CHK	ZONE	DATE	CHANGES

UNLESS OTHERWISE SPECIFIED

TOLERANCES		
	X.X ± 0.1	FRAC. ± 1/64
	X.XX ± 0.03	Angles ± 1.00°
	X.XXX ± 0.010	FINISH 125 √(µin)

DO NOT SCALE PRINT

THREADS ARE CLASS 2
CHAMFER ENDS OF ALL SCREW TREADS 30°
CUT ROUND, 1.5 THREAD RELIEF ON MACHINED THREADS
BREAK EDGES .016 MAX. ON MACHINED WORK
REMOVE BURRS, WELD SPLATTER & LOOSE SCALE
IN ACCORDANCE WITH ASME Y14.5M & B46.1

SHOP ORDERS

ACCT NO.	UC4105	NO. REQD 15-20	SER NO. -
DEL TO	T. LOEW		DATE ISSD -
SURFACE TREATMT			DATE REQD -
IDENT METHOD	TAG		
PROJECT NUMBER	N/A		
PROJECT NAME	N/A		
DWG BY	T. LOEW	DATE 07-Aug-03	
CHK BY		DATE	
APR BY		DATE	

ERNEST ORLANDO LAWRENCE
BERKELEY NATIONAL LABORATORY
UNIVERSITY OF CALIFORNIA - BERKELEY

DESIGNWORKS ROCKSTAND
LOAD CELL ASSEMBLY
BALANCING SHIM

MICROFILMED:	DWG. TYPE	SHOWN ON	SCALE: 1/2	DO NOT SCALE PRINTS
	PART		SHEET 1 OF 1	

PATENT CLEAR:	DESIGN ACCT. NO.	CATEGORY CODE	DWG. NO.	SIZE	REV.
	UC4105	DW4212	25H160	2	1

Rev. 1/29/2000 J. K. Osborn

Dwg. File: 25H160 Model File: 25H160

DWG. NO.	SIZE	REV.	SH.
25H1612		1	1

DESCRIPTION	MATERIAL	QUANTITY
		1
		5
		2

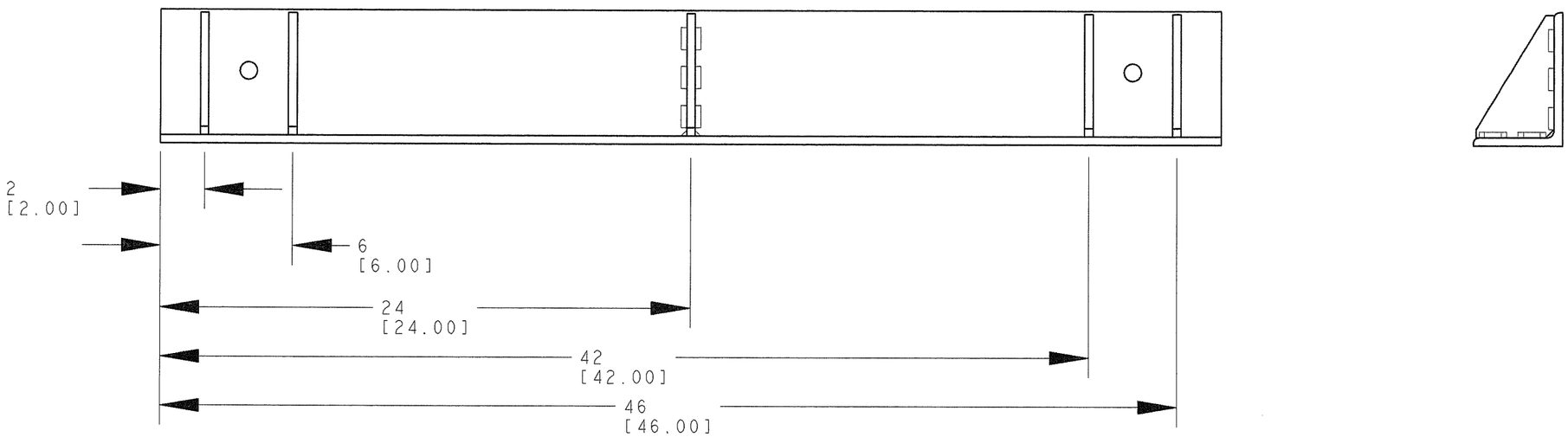

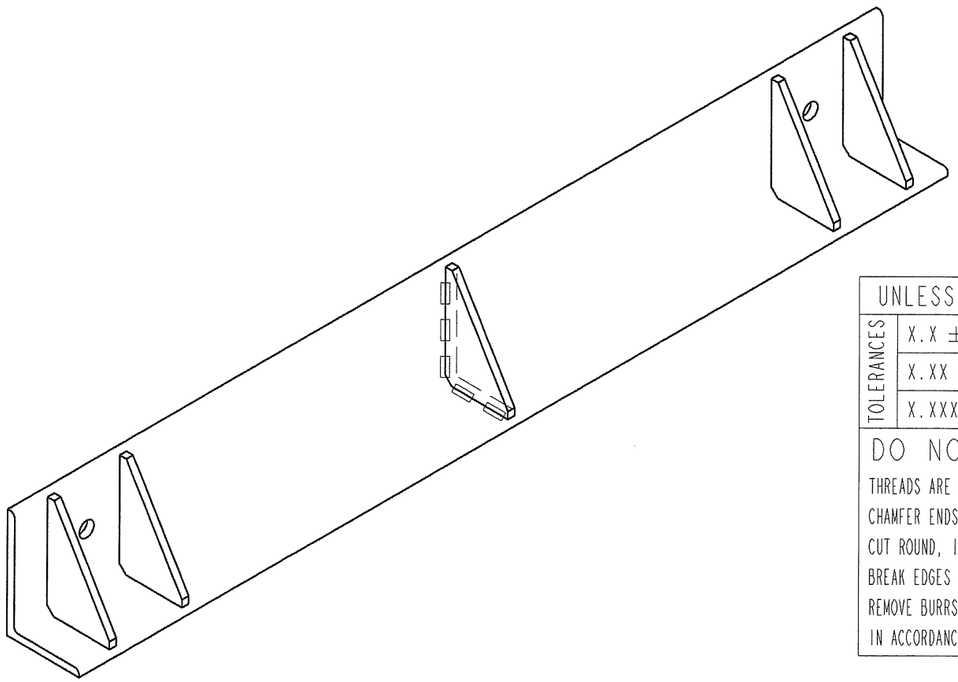

UNLESS OTHERWISE SPECIFIED			SHOP ORDERS		SER NO. -
TOLERANCES	X.X ± 0.1	FRAC. ± 1/64	ACCT NO. UC4105	NO. REQD 4	DATE ISSD -
	X.XX ± 0.03	Angles ± 1.00°	DEL TO		DATE REQD -
	X.XXX ± 0.010	FINISH 125	SURFACE TREATMT		
DO NOT SCALE PRINT			IDENT METHOD TAG		
THREADS ARE CLASS 2			PROJECT NUMBER N/A		
CHAMFER ENDS OF ALL SCREW TREADS 30°			PROJECT NAME N/A		
CUT ROUND, 1.5 THREAD RELIEF ON MACHINED THREADS			DWG BY T.LOEW		DATE 23-May-03
BREAK EDGES .016 MAX. ON MACHINED WORK			CHK BY		DATE
REMOVE BURRS, WELD SPLATTER & LOOSE SCALE			APR BY		DATE
IN ACCORDANCE WITH ASME Y14.5M & B46.1					

ERNEST ORLANDO LAWRENCE
BERKELEY NATIONAL LABORATORY
UNIVERSITY OF CALIFORNIA - BERKELEY

DESIGNWORKS ROCKSTAND
PALLET RESTRAINT
ASSEMBLY DRAWING

MICROFILMED:	DWG. TYPE ASSEM	SHOWN ON	SCALE: 17/100	DO NOT SCALE PRINTS
			SHEET 1 OF 1	
PATENT CLEAR:	DESIGN ACCT. NO. UC4105	CATEGORY CODE DW4212	DWG. NO. 25H161 SIZE 2	REV. 1

Rev. 1/29/2000 J. R. Osborn

Dwg. File: 25H161 Model File: 25H161

DWG. NO.	SIZE	REV.	SH.
25H1622		1	1

DESCRIPTION	MATERIAL	MAT. LOCATION
6 x 4 x 3/8 ANGLE	A36	

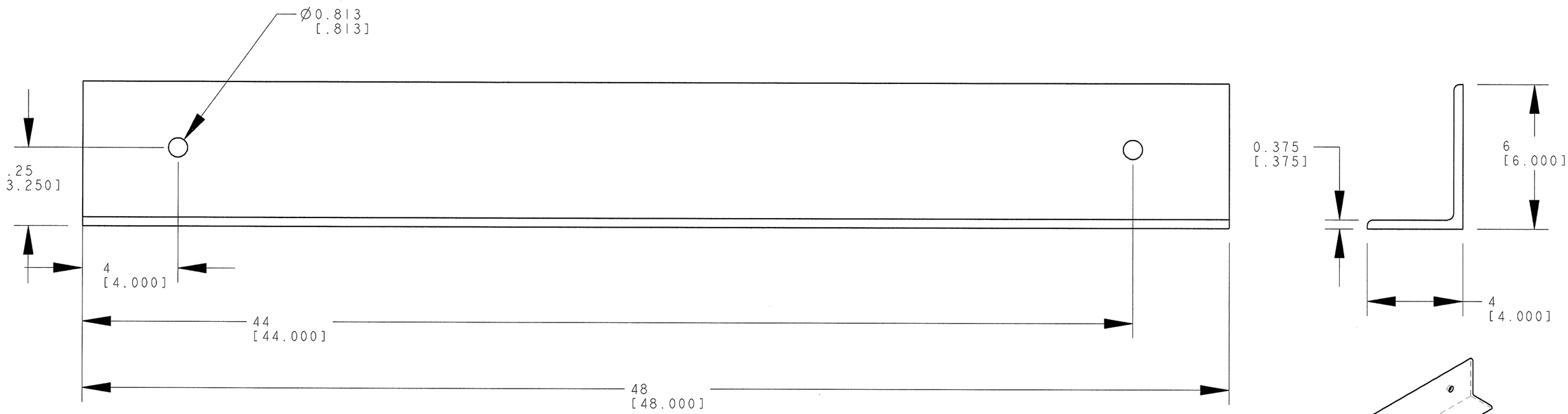

SCALE 2/25

REV	DWG	CHK	ZONE	DATE	CHANGES

UNLESS OTHERWISE SPECIFIED

TOLERANCES		
	X.X ± 0.1	FRAC. ± 1/64
	X.XX ± 0.03	Angles ± 1.00°
	X.XXX ± 0.010	FINISH 125

DO NOT SCALE PRINT

THREADS ARE CLASS 2
CHAMFER ENDS OF ALL SCREW TREADS 30°
CUT ROUND, 1.5 THREAD RELIEF ON MACHINED THREADS
BREAK EDGES .016 MAX. ON MACHINED WORK
REMOVE BURRS, WELD SPLATTER & LOOSE SCALE
IN ACCORDANCE WITH ASME Y14.5M & B46.1

SHOP ORDERS

SER NO.	-		
ACCT NO.		NO. REQD	4
DATE ISSD	-		
DEL TO		DATE REQD	-
SURFACE TREATMT			
IDENT METHOD	TAG		
PROJECT NUMBER	N/A		
PROJECT NAME	N/A		
DWG BY	T. LOEW	DATE	23-May-03
CHK BY		DATE	
APR BY	None	DATE	

ERNEST ORLANDO LAWRENCE
BERKELEY NATIONAL LABORATORY
UNIVERSITY OF CALIFORNIA - BERKELEY

DESIGNWORKS ROCKSTAND
PALLET RESTRAINT
ANGLE

MICROFILMED:	DWG. TYPE	SHOWN ON	SCALE: 1/4	DO NOT SCALE PRINTS
	PART		SHEET 1 OF 1	
PATENT CLEAR:	DESIGN ACCT. NO.	CATEGORY CODE	DWG. NO.	SIZE / REV.
	UC4105	DW4212	25H162	2 / 1

Dwg. File: 25H162 Model File: 25H162

Rev. 1/29/2008 J. R. Dibora

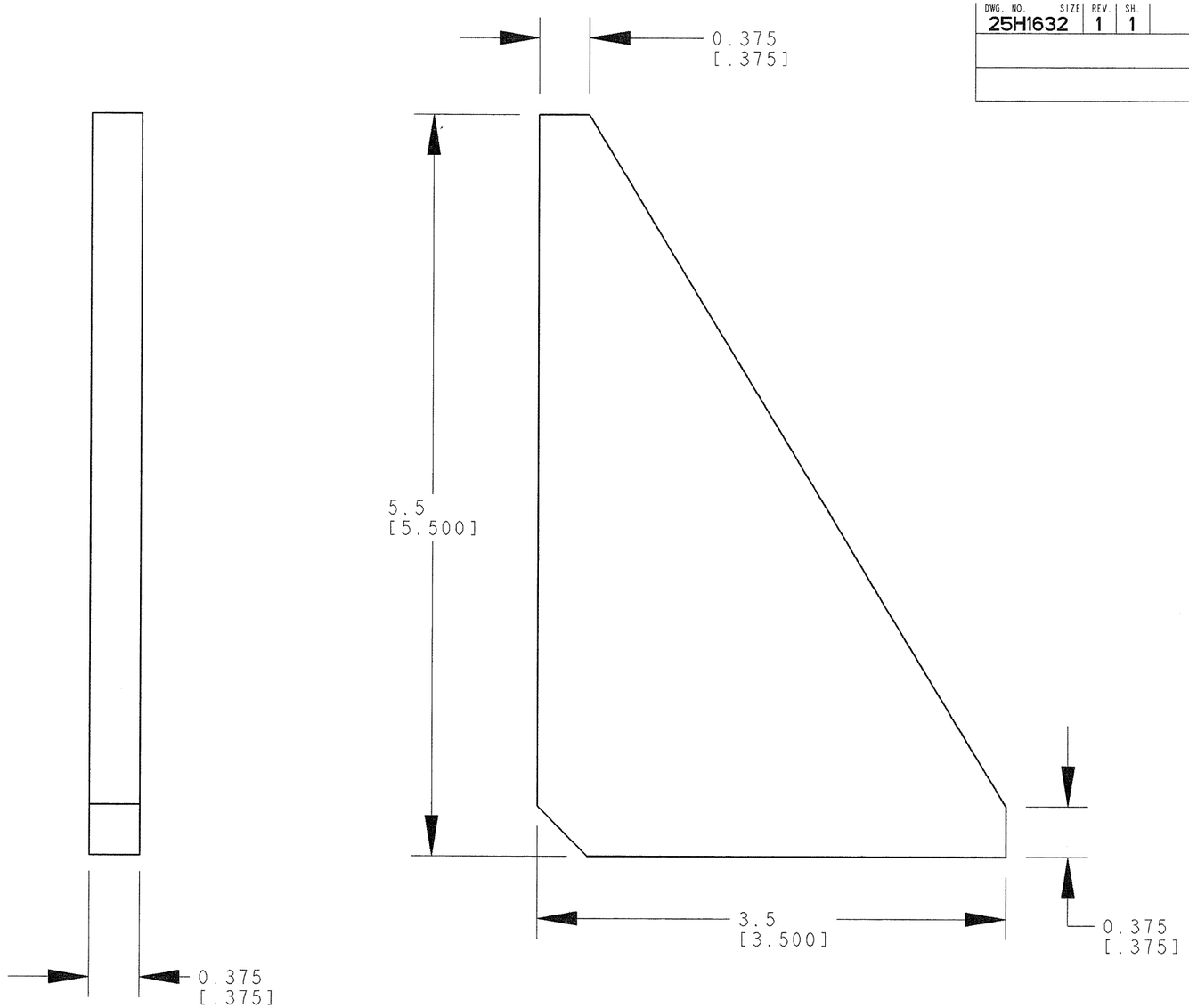

DWG. NO.	SIZE	REV.	SH.
25H1632		1	1

DESCRIPTION	MATERIAL	MAT. LOCATION
3/8" PLATE STOCK	A36	-

REV	DWG	CHK	ZONE	DATE	CHANGES

UNLESS OTHERWISE SPECIFIED

TOLERANCES		
	X.X ± 0.1	FRAC. ± 1/64
	X.XX ± 0.03	Angles ± 1.00°
	X.XXX ± 0.010	FINISH 125

DO NOT SCALE PRINT

THREADS ARE CLASS 2

CHAMFER ENDS OF ALL SCREW TREADS 30°

CUT ROUND, 1.5 THREAD RELIEF ON MACHINED THREADS

BREAK EDGES .016 MAX. ON MACHINED WORK

REMOVE BURRS, WELD SPLATTER & LOOSE SCALE

IN ACCORDANCE WITH ASME Y14.5M & B46.1

SHOP ORDERS

SER NO.	-		
ACCT NO.		NO. REQD 4	DATE ISSD -
DEL TO			DATE REQD -
SURFACE TREATMT			
IDENT METHOD	TAG		
PROJECT NUMBER	N/A		
PROJECT NAME	N/A		
DWG BY	T. LOEW	DATE	23-May-03
CHK BY		DATE	
APR BY	None	DATE	

ERNEST ORLANDO LAWRENCE
BERKELEY NATIONAL LABORATORY
UNIVERSITY OF CALIFORNIA - BERKELEY

DESIGNWORKS ROCKSTAND
PALLET RESTRAINT
GUSSET

MICROFILMED:	DWG. TYPE	SHOWN ON	SCALE: 1/1	DO NOT SCALE PRINTS
	PART		SHEET 1 OF 1	

PATENT CLEAR:	DESIGN ACCT. NO.	CATEGORY CODE	DWG. NO.	SIZE	REV.
	UC4105	DW4212	25H163	2	1

Rev. 1/29/2000 J. R. Gabert

Dwg. File: 25H163 Model File: 25H163

DWG. NO.	SIZE	REV.	SH.
25H1642		1	1

DESCRIPTION	MATERIAL	MAT. LOCATION
0.5 IN STOCK PLATE	A36 STEEL	-

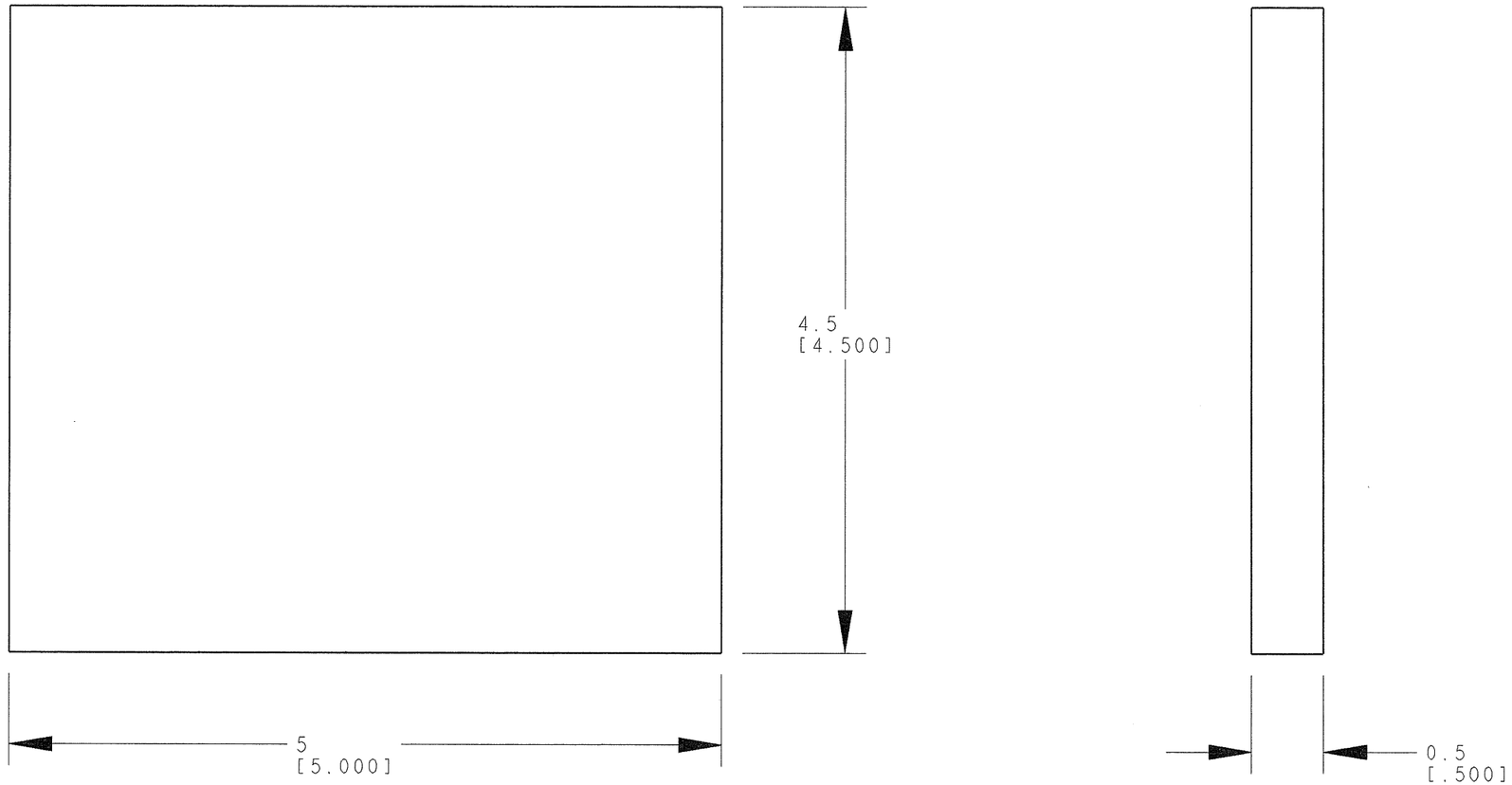

UNLESS OTHERWISE SPECIFIED			SHOP ORDERS			SER NO. -
TOLERANCES	X.X ± 0.1	FRAC. ± 1/64	ACCT NO. UC4105		NO. REQD 2	DATE ISSD -
	X.XX ± 0.03	Angles ± 1.00°	DEL TO			DATE REQD -
	X.XXX ± 0.010	FINISH 125	SURFACE TREATMT -			
DO NOT SCALE PRINT			IDENT METHOD TAG			
THREADS ARE CLASS 2			PROJECT NUMBER N/A			
CHAMFER ENDS OF ALL SCREW TREADS 30°			PROJECT NAME N/A			
CUT ROUND, 1.5 THREAD RELIEF ON MACHINED THREADS			DWG BY T. LOEW		DATE 23-May-03	
BREAK EDGES .016 MAX. ON MACHINED WORK			CHK BY		DATE	
REMOVE BURRS, WELD SPLATTER & LOOSE SCALE			APR BY		DATE	
IN ACCORDANCE WITH ASME Y14.5M & B46.1						

ERNEST ORLANDO LAWRENCE
BERKELEY NATIONAL LABORATORY
UNIVERSITY OF CALIFORNIA - BERKELEY

DESIGNWORKS ROCKSTAND
PALLET RESTRAINT
SHIM

MICROFILMED:	DWG. TYPE	SHOWN ON	SCALE: 1/1	DO NOT SCALE PRINTS
	PART		SHEET 1 OF 1	
PATENT CLEAR:	DESIGN ACCT. NO.	CATEGORY CODE	DWG. NO.	SIZE / REV.
	UC4105	DW4212	25H164	2 / 1

Rev. 1/29/2000 J. R. Dibora

Dwg. File: 25H164 Model File: 25H164

DWG. NO.	SIZE	REV.	SH.
25H1652	1	1	

DESCRIPTION	MATERIAL	MAT. LOCATION
5/16 IN PLATE STOCK	Al 6061-T6	-

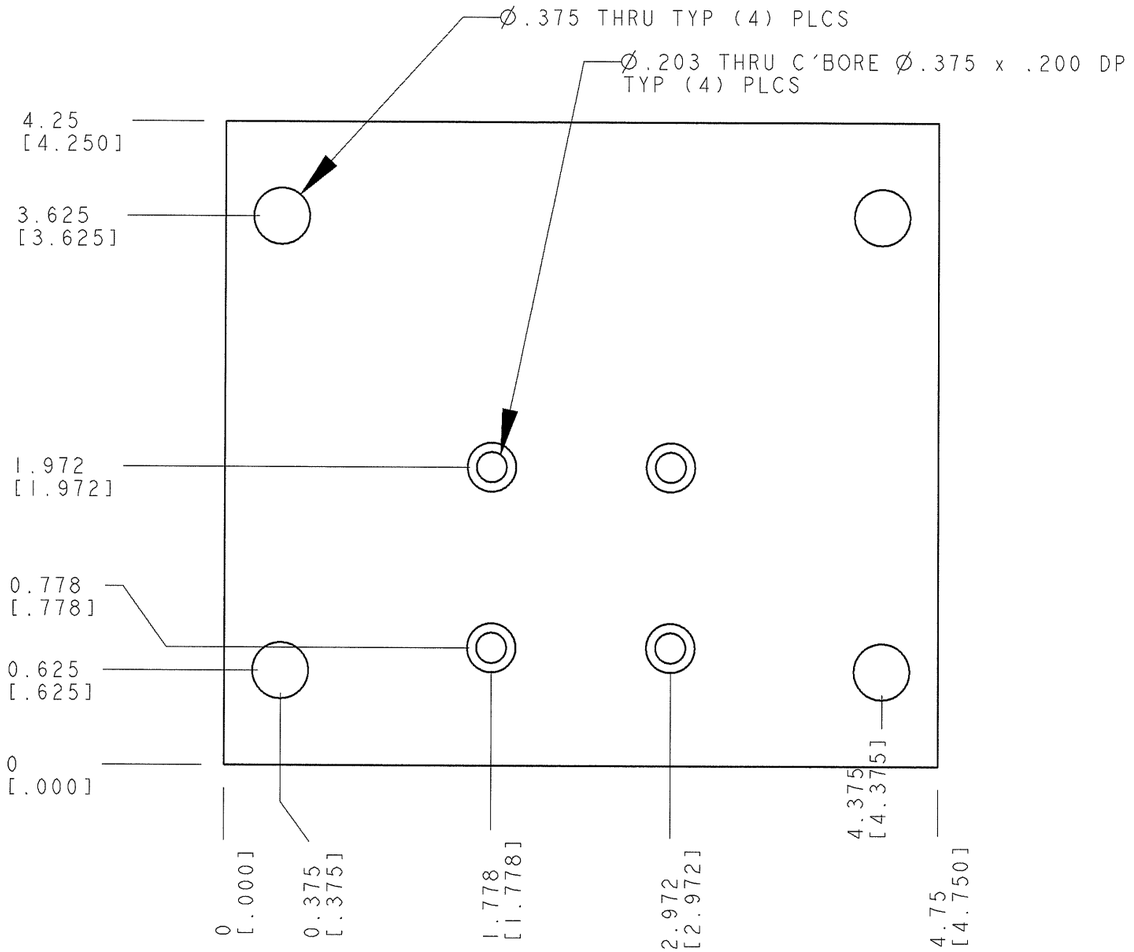

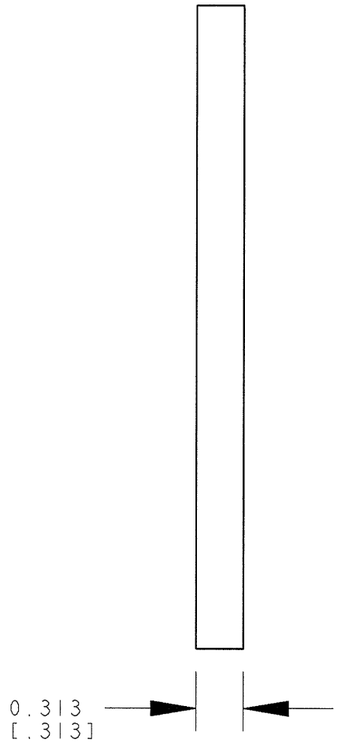

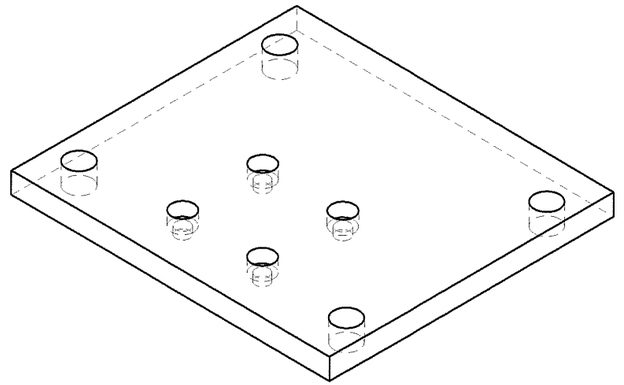

SCALE 63/100

UNLESS OTHERWISE SPECIFIED			SHOP ORDERS		SER NO. -
TOLERANCES	X.X ± 0.1	FRAC. ± 1/64	ACCT NO. UC4105	NO. REQD 4	DATE ISSD -
	X.XX ± 0.03	Angles ± 1.00°	DEL TO		DATE REQD -
	X.XXX ± 0.010	FINISH 125	SURFACE TREATMT		
DO NOT SCALE PRINT			IDENT METHOD TAG		
THREADS ARE CLASS 2			PROJECT NUMBER N/A		
CHAMFER ENDS OF ALL SCREW TREADS 30°			PROJECT NAME N/A		
CUT ROUND, 1.5 THREAD RELIEF ON MACHINED THREADS			DWG BY T. LOEW	DATE 23-May-03	
BREAK EDGES .016 MAX. ON MACHINED WORK			CHK BY	DATE	
REMOVE BURRS, WELD SPLATTER & LOOSE SCALE			APR BY	DATE	
IN ACCORDANCE WITH ASME Y14.5M & B46.1					

ERNEST ORLANDO LAWRENCE
BERKELEY NATIONAL LABORATORY
UNIVERSITY OF CALIFORNIA - BERKELEY

DESIGNWORKS ROCKSTAND
LOAD CELL ASSEMBLY
MOUNTING PLATE

MICROFILMED:	DWG. TYPE	SHOWN ON	SCALE: 1/1	DO NOT SCALE PRINTS
	PART		SHEET 1 OF 1	
PATENT CLEAR:	DESIGN ACCT. NO.	CATEGORY CODE	DWG. NO.	SIZE / REV.
	UC4105	DW4212	25H165	2 / 1

Rev. 1/29/2000 J. R. Osborn

Dwg. File: 25H165 Model File: 25H165

DWG. NO.	SIZE	REV.	SH.
25H1662		1	1

DESCRIPTION	MATERIAL	MAT. LOCATION
	Al 6061-T6	-

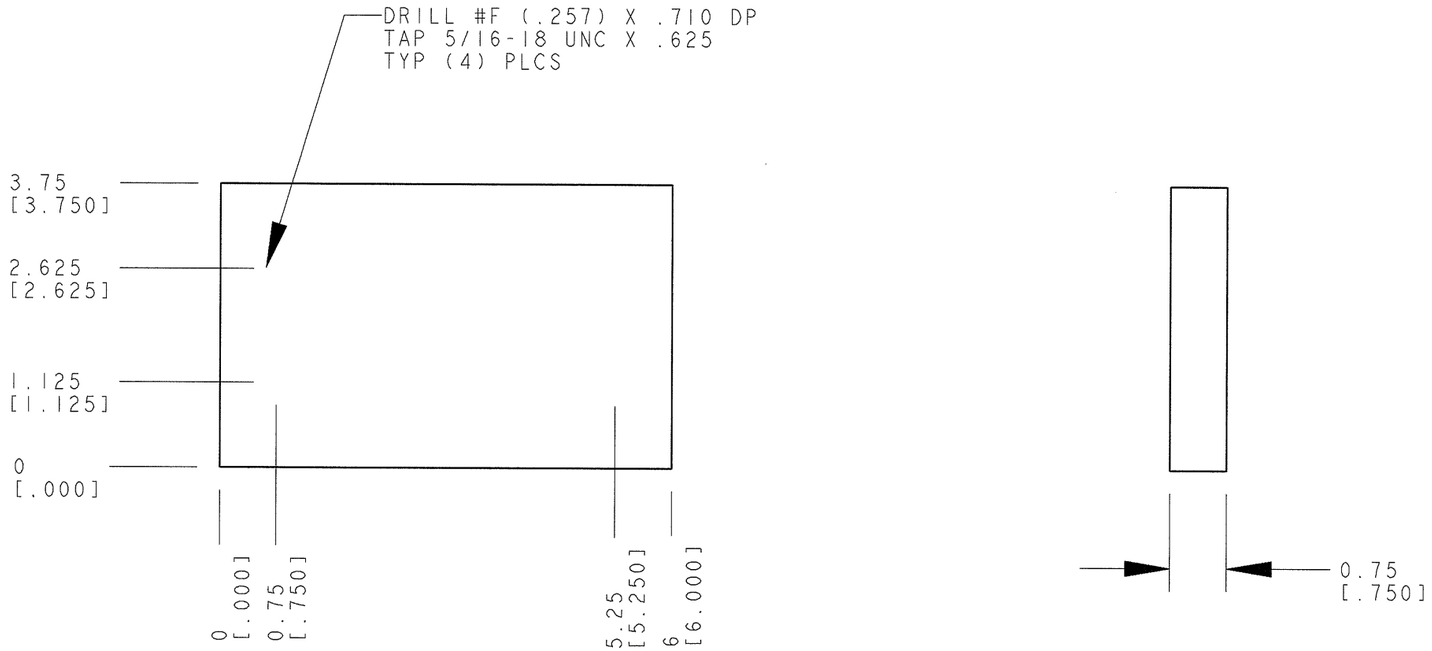

SCALE 1/2

UNLESS OTHERWISE SPECIFIED			SHOP ORDERS		SER NO. -
TOLERANCES	X.X ± 0.1	FRAC. ± 1/64	ACCT NO.	NO. REQD 4	DATE ISSD -
	X.XX ± 0.03	Angles ± 1.00°	DEL TO T. LOEW		DATE REQD -
	X.XXX ± 0.010	FINISH 125 √(µin)	SURFACE TREATMT -		
DO NOT SCALE PRINT			IDENT METHOD TAG		
THREADS ARE CLASS 2			PROJECT NUMBER N/A		
CHAMFER ENDS OF ALL SCREW TREADS 30°			PROJECT NAME N/A		
CUT ROUND, 1.5 THREAD RELIEF ON MACHINED THREADS			DWG BY T. LOEW	DATE 23-May-03	
BREAK EDGES .016 MAX. ON MACHINED WORK			CHK BY	DATE	
REMOVE BURRS, WELD SPLATTER & LOOSE SCALE			APR BY	DATE	
IN ACCORDANCE WITH ASME Y14.5M & B46.1					

ERNEST ORLANDO LAWRENCE BERKELEY NATIONAL LABORATORY
UNIVERSITY OF CALIFORNIA - BERKELEY

DESIGNWORKS ROCKSTAND
PALETTE REPLACEMENT PART
FOOTING

MICROFILMED:	DWG. TYPE PART	SHOWN ON	SCALE: 1/2	DO NOT SCALE PRINTS
			SHEET 1 OF 1	
PATENT CLEAR:	DESIGN ACCT. NO.	CATEGORY CODE	DWG. NO. 25H166	SIZE 2 / REV. 1

Dwg. File: 25H166 Model File: 25H166

Rev. 1/29/2000 J. R. Osborn