DWG. NO.	SIZE	REV.	SH.
1		1	1

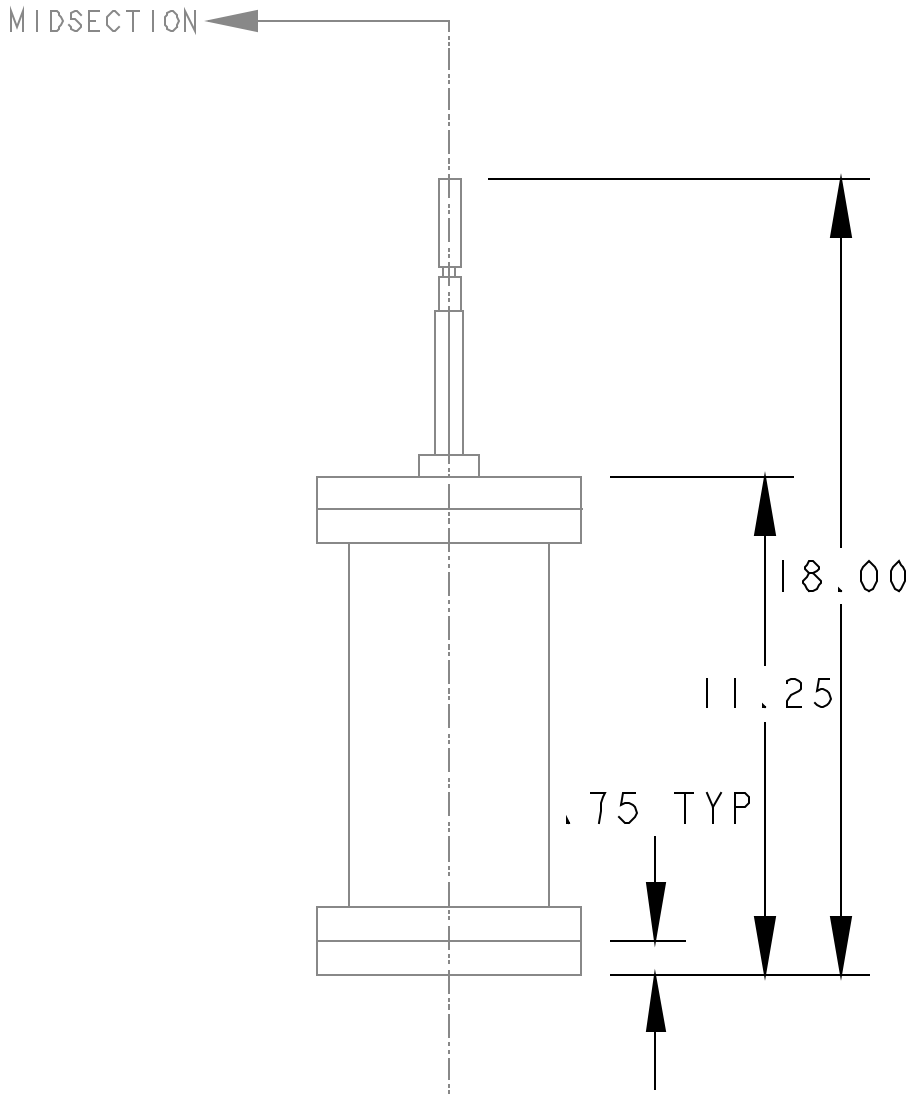

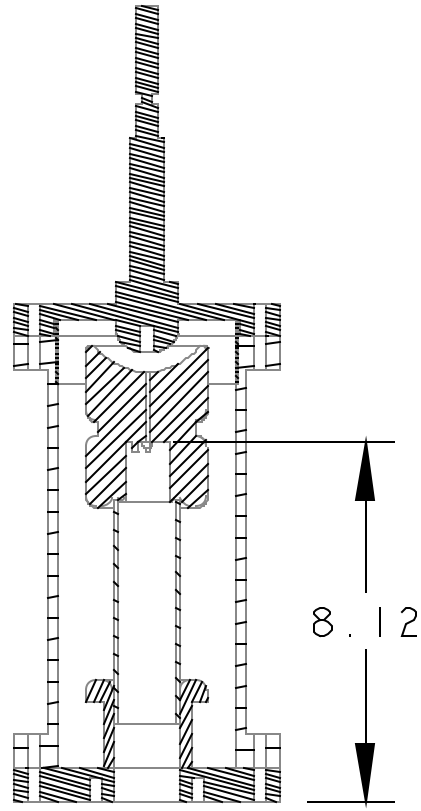

SECTION MIDSECTION-MIDSECTION
SCALE 23/100

CATHODE BASE
SHEET 2

ALL DIM INCHES

UNLESS OTHERWISE SPECIFIED		
TOLERANCES	X.X ±0.1	FRAC ±1/64
	X.XX ±0.03	Angles ±1.00°
	X.XXX ±0.010	FINISH

DO NOT SCALE PRINT

THREAD MECHANIC
CHAMFER ENDS OF ALL ACCESS THREADS 30°
CUT DOWN, 1.5 THREAD RELIEF ON MACHINED THREADS
BREAK EDGES 1/16 MAX. ON MACHINED PARTS
REMOVE BURRS, WELD SPATTER & LOOSE SCALE
IN ACCORDANCE WITH ANSI Y14.36 & B40.1

SHOP ORDERS		
WCT		
RT		
REL		
TO		
SURFACE TREATMT		
VERIF	TAG	
WELDER		
PRESET	N/A	
FINISH		
PRESET	N/A	
MAN	T LOEV	DATE 21-Jan-03
QC		
RT	K CHOW	DATE
APV		
RT		DATE

ERNEST ORLANDO LAWRENCE
BERKELEY NATIONAL LABORATORY
UNIVERSITY OF CALIFORNIA - BERKELEY

JAKLEVIC XRAY GENERATOR FOR EPA
EXISTING HARDWARE
XRAY TUBE ASSEMBLY

MICROFILMED:	DWG. TYPE	SHOWN ON	SCALE: 7/50	DO NOT SCALE PRINTS
	ASSEM		SHEET 1 OF 4	
PATENT CLEAR:	DESIGN ACCT NO	CATEGORY CODE DW4142	DWG NO. 1	SIZE	REV 1

Dwg. File: OVERALL_ASSY Model File: OVERALL_ASSY

Rev. 1/23/2003 J.E. Sabrdo

DWG. NO.	SIZE	REV.	SH.
1		1	2

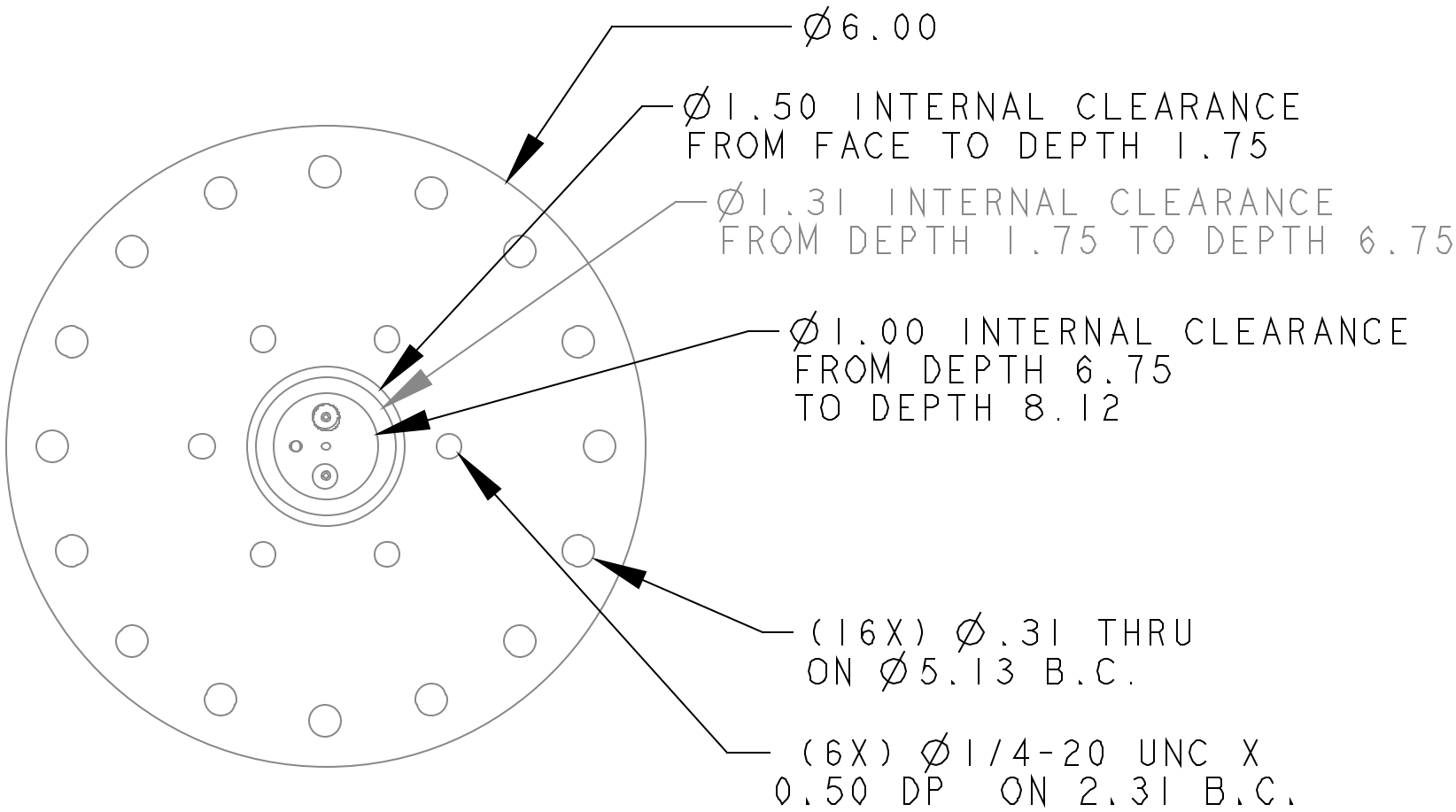

VIEW CATHODE BASE

SCALE 63/100

ALL DIM INCHES

UNLESS OTHERWISE SPECIFIED		
TOLERANCES	X.X ±0.1	FRAC ±1/64
	X.XX ±0.03	Angles ±1.00°
	X.XXX ±0.010	FINISH

DO NOT SCALE PRINT

THREAD MECHANIC
CHAMFER ENDS OF ALL STEEL OF THREADS 30°
CUT DOWN, 1.5 THREAD RELIEF ON MACHINED THREADS
BREAK EDGES .015 MAX OR MACHINED FROM
REMOVE BURRS, WELD SPATTER & LOOSE SCALE
IN ACCORDANCE WITH ANSI Y14.36 & B46.1

SHOP ORDERS		
WCT		
NO.		NO. ITEM
REL		
TO		
SURFACE TREATMT		
VERIF		
WELDER	TAG	
PRESET		
FINISH	N/A	
PRESET		
MAKE	N/A	
DWN BY	T LOEV	DATE 27-Jan-03
CHK BY	K CHOW	DATE
APR BY		DATE

ENGR	-
DATE	-
ISSD	-
DATE	-
ITEM	-

ERNEST ORLANDO LAWRENCE BERKELEY NATIONAL LABORATORY
UNIVERSITY OF CALIFORNIA - BERKELEY

JAKLEVIC XRAY GENERATOR FOR EPA
EXISTING HARDWARE
XRAY TUBE ASSEMBLY

MICROFILMED:	DWG. TYPE	SHOWN ON	SCALE: 7/50	DO NOT SCALE PRINT
	ASSEM		SHEET 2 OF 4	
PATENT CLEAR:	DESIGN ACCT NO	CATEGORY CODE	DWG NO.	SIZE	REV
		DW4142	1		1

Dwg. File: OVERALL_ASSY Model File: OVERALL_ASSY

Rev. 1/29/2003 J.E. Chow

DWG. NO.	SIZE	REV.	SH.
1		1	3

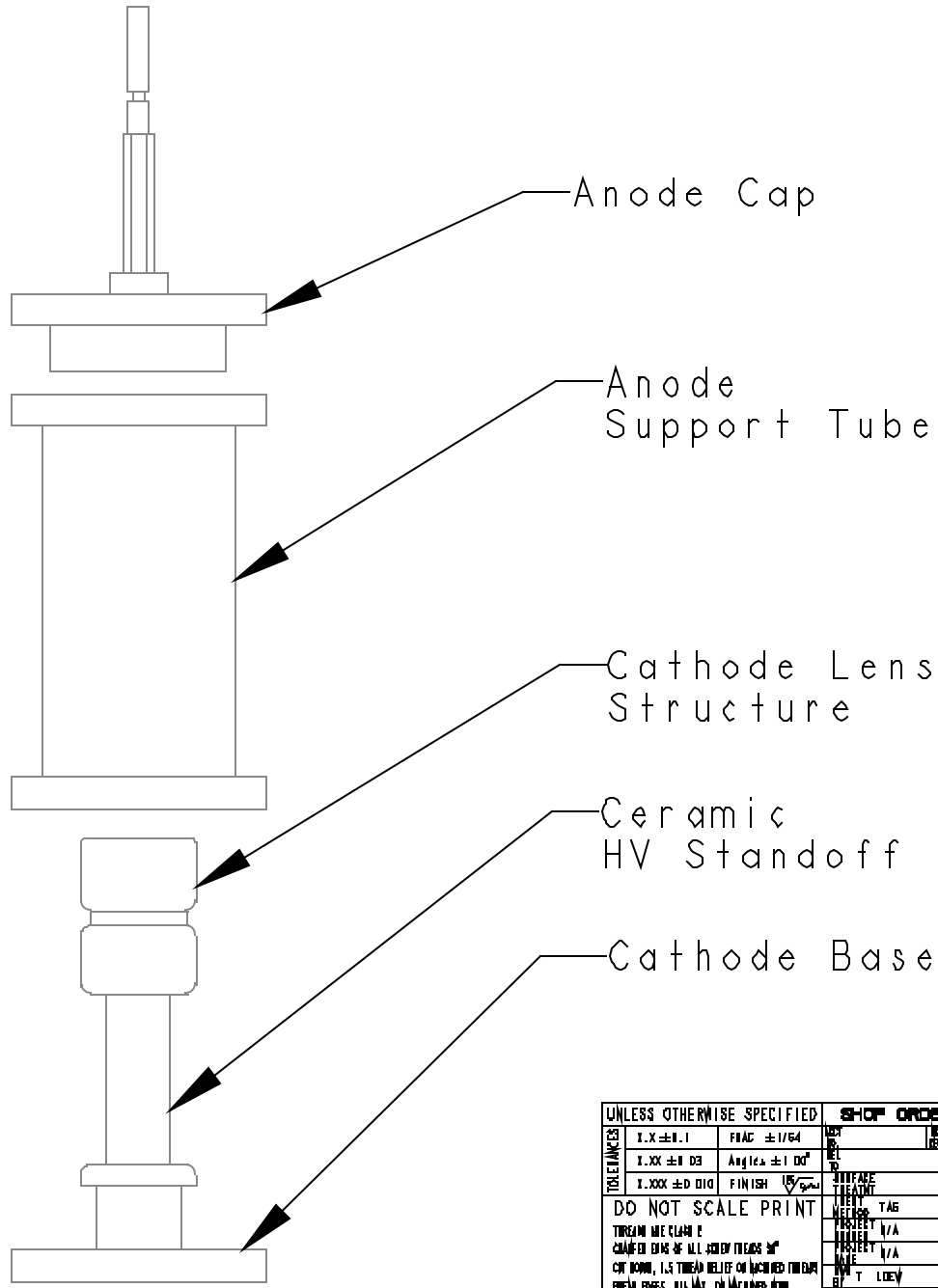

EXPLODED VIEW
SCALE 23/100

ALL DIM INCHES

UNLESS OTHERWISE SPECIFIED		
TOLERANCES	X.X ±0.1	FRAC ±1/64
	X.XX ±0.03	Angles ±1 00°
	X.XXX ±0.010	FINISH 125

DO NOT SCALE PRINT

THREADS ARE CLASS 2
CHAMFER ENDS OF ALL SCREW THREADS 30°
CUT DOWN, 1.5 THREAD RELIEF ON MACHINED THREADS
BREAK EDGES MIN MAX ON MACHINED ITEMS
REMOVE BURRS, WELD SPLATTER & LOOSE SCALE
IN ACCORDANCE WITH ASME Y14.5M & B40.1

SHOP ORDERS

SURFACE TREATMT			
INSPT METHOD	TAG		
PROJECT NUMBER	N/A		
PROJECT NAME	N/A		
DWN BY	T LOEV	DATE	27-Jan-03
CHK BY	K CHOW	DATE	
APR BY		DATE	

ERNEST ORLANDO LAWRENCE
BERKELEY NATIONAL LABORATORY
UNIVERSITY OF CALIFORNIA - BERKELEY

JAKLEVIC XRAY GENERATOR FOR EPA
EXISTING HARDWARE
XRAY TUBE ASSEMBLY

MICROFILMED:	DWG. TYPE	SHOWN ON	SCALE: 7/50	DO NOT SCALE PRINTS
	ASSEM		SHEET 3 OF 4	
PATENT CLEAR:	DESIGN ACCT NO	CATEGORY CODE DW4142	DWG NO. 1	SIZE / REV 1

Dwg. File: OVERALL_ASSY Model File: OVERALL_ASSY

DWG. NO.	SIZE	REV.	SH.
1		1	4

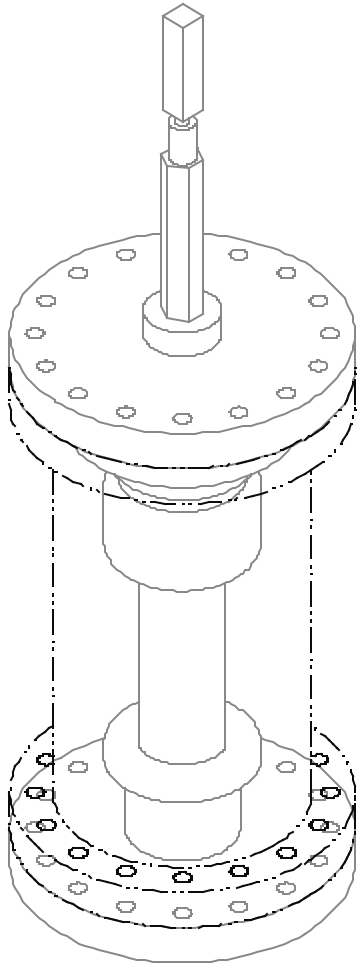

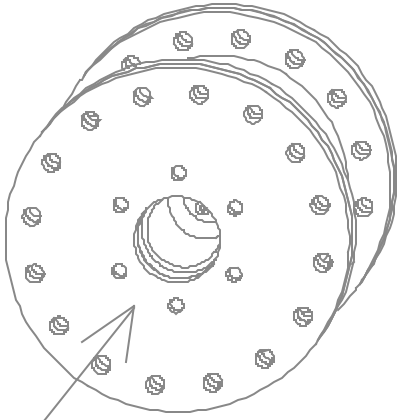

END VIEW OF INTERNAL CONTACTS
SCALE 3/10

ALL DIM INCHES

UNLESS OTHERWISE SPECIFIED

TOLERANCES		
	X.X ±0.1	FRAC ±1/64
	X.XX ±0.03	Angles ±1.00°
	X.XXX ±0.010	FINISH

DO NOT SCALE PRINT

THREAD MECHANIC
CHAMFER ENDS OF ALL ACCESS THREADS 30°
CUT DOWN, 1.5 THREAD RELIEF ON MACHINED THREADS
BREAK EDGES .015 MAX. ON MACHINED PARTS
REMOVE BURRS, WELD SPATTER & LOOSE SCALE
IN ACCORDANCE WITH ANSI Y14.36 & B46.1

SHOP ORDERS

MAT		MS	DATE -
MS		DESIGN	
REL			DATE -
TO			DATE -
SURFACE TREATMT			
VERIF			
WELDING	TAG		
PROJECT			
FINISH	N/A		
PROJECT			
MAKE	N/A		
DWN	T LOEV		DATE 27-Jan-03
CHK			
CHK	K CHOW		DATE
APR			DATE
APR			DATE

ERNEST ORLANDO LAWRENCE
BERKELEY NATIONAL LABORATORY
UNIVERSITY OF CALIFORNIA - BERKELEY

JAKLEVIC XRAY GENERATOR FOR EPA
EXISTING HARDWARE
XRAY TUBE ASSEMBLY

MICROFILMED:	DWG. TYPE	SHOWN ON	SCALE: 7/50	DO NOT SCALE PRINT
	ASSEM		SHEET 4 OF 4	
PATENT CLEAR:	DESIGN ACCT NO	CATEGORY CODE	DWG NO.	SIZE	REV
		DW4142	1		1

Dwg. File: OVERALL_ASSY Model File: OVERALL_ASSY

Rev. 1/23/2003 J.T. Sabato