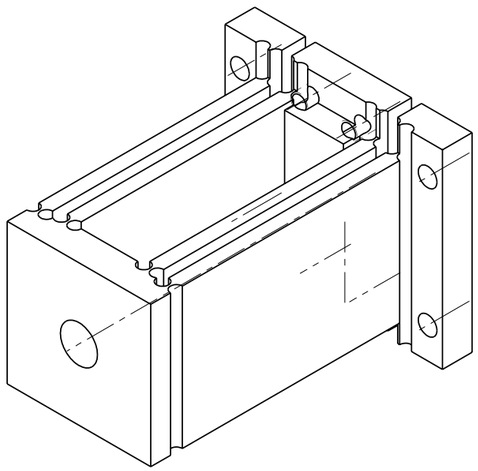

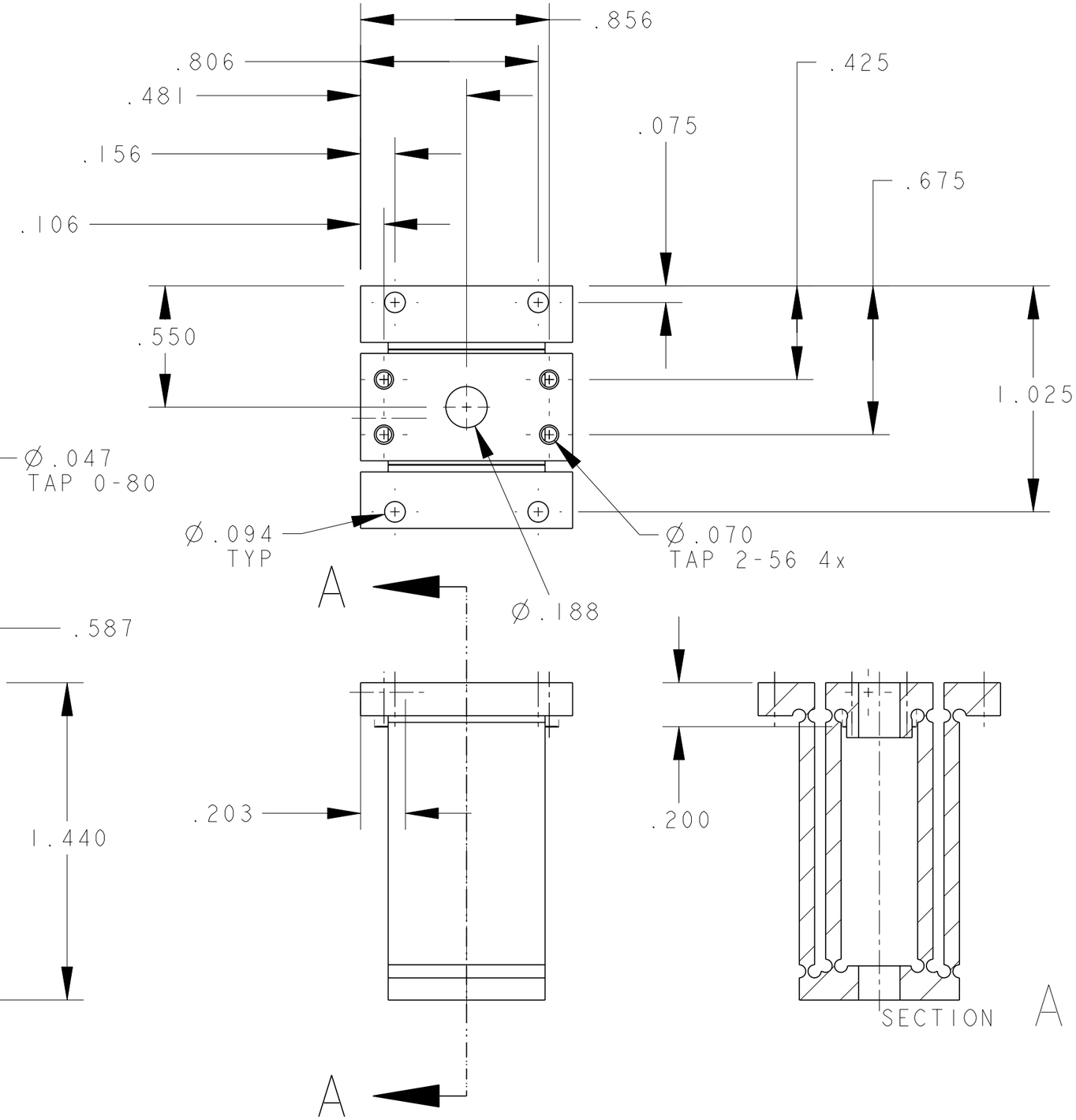
.856
.806
.481
.156
.106
.425
.075
.675
.550
1.025
Ø.094
TYP
Ø.070
TAP 2-56 4x
Ø.188
A
A
.203

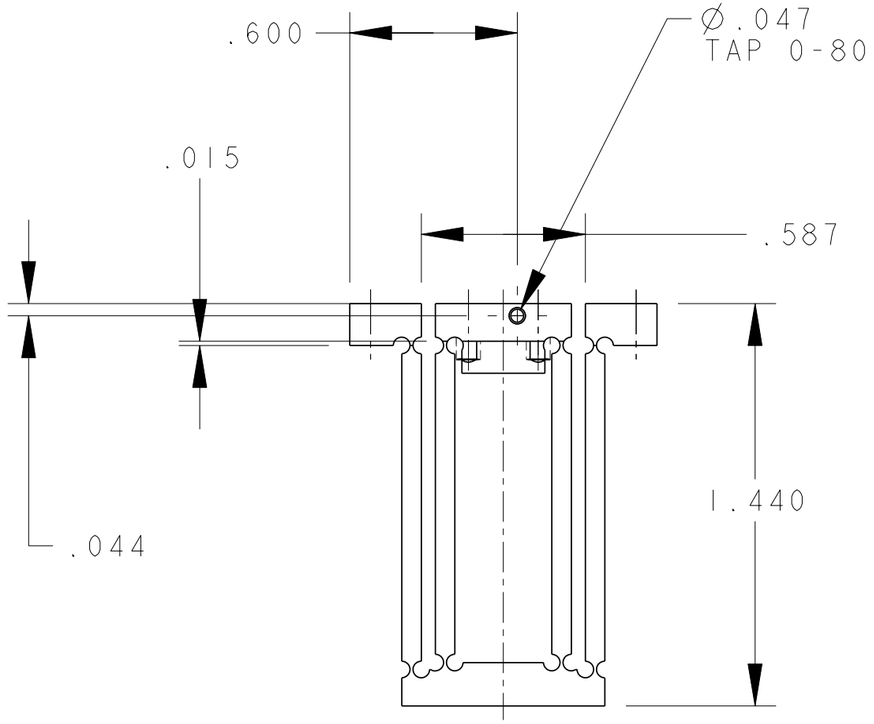
.600
Ø.047
TAP 0-80
.015
.587
1.440
.044

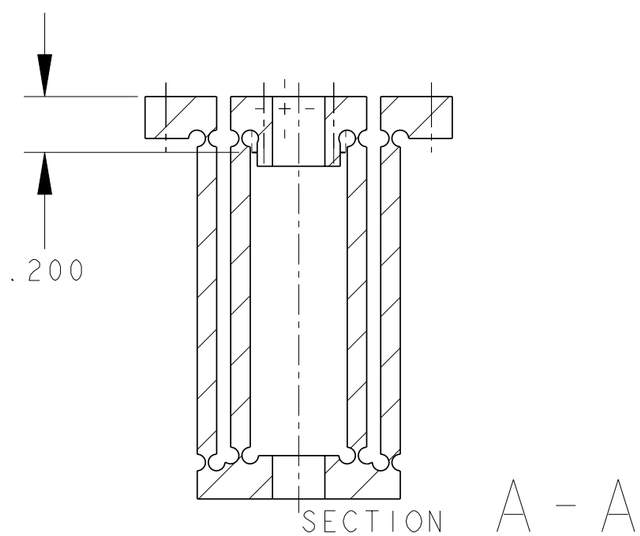
.200
SECTION A - A