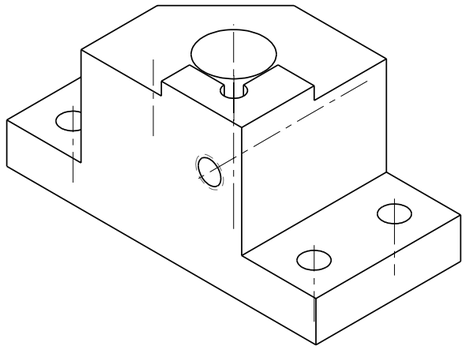

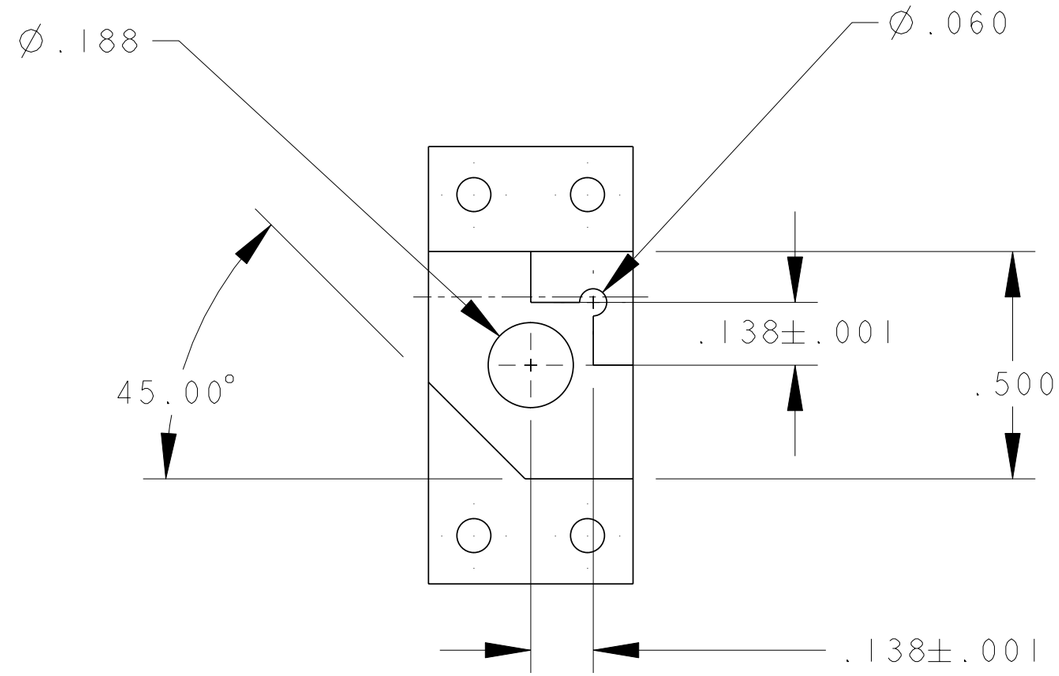
Ø.188
Ø.060
45.00°
.138±.001
.500
.138±.001

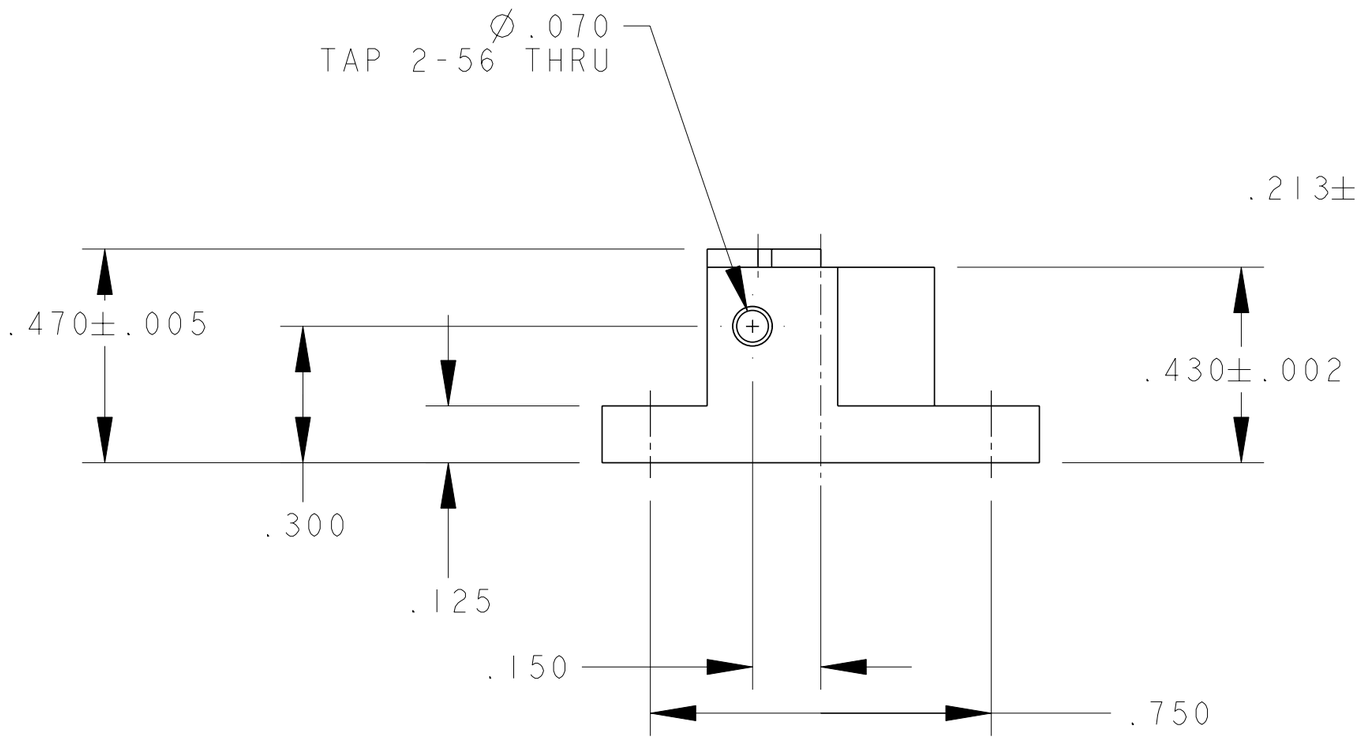
Ø.070
TAP 2-56 THRU
.470±.005
.430±.002
.300
.125
.150
.750

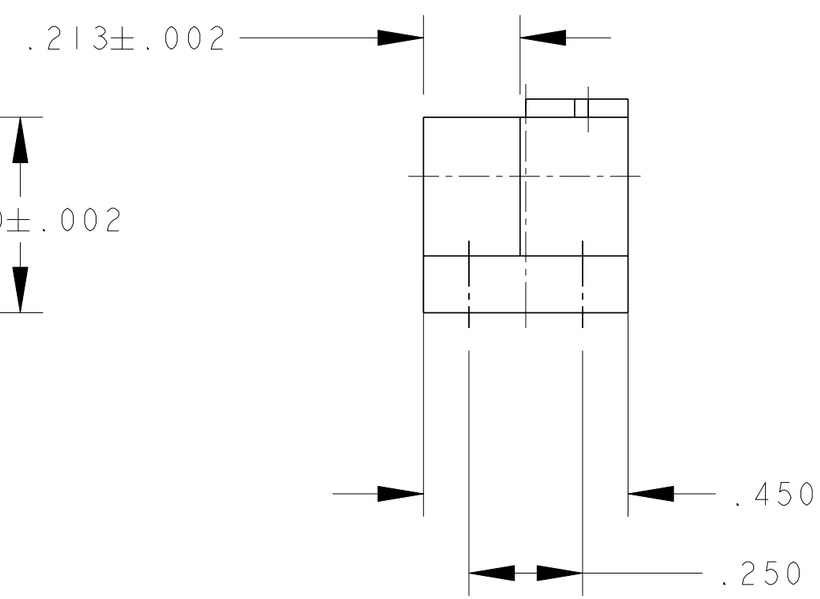
.213±.002
.450
.250