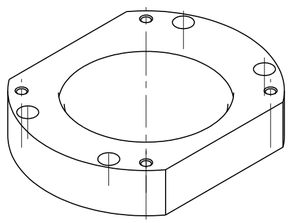

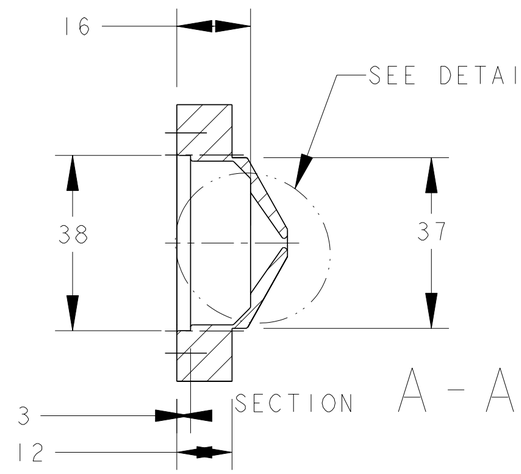
16
SEE DETAIL V
38
37
3
12
SECTION A - A

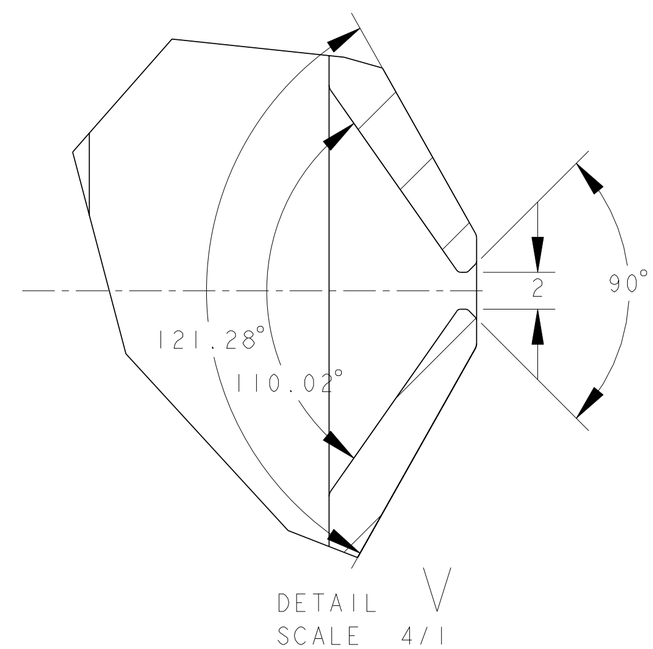
2
90°
121.28°
110.02°
DETAIL V
SCALE 4/1

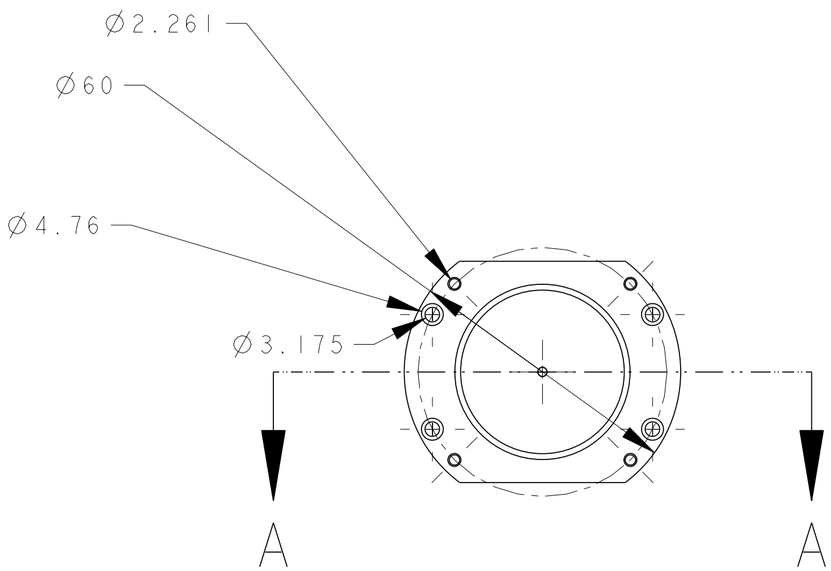
Ø2.261
Ø60
Ø4.76
Ø3.175
A
A

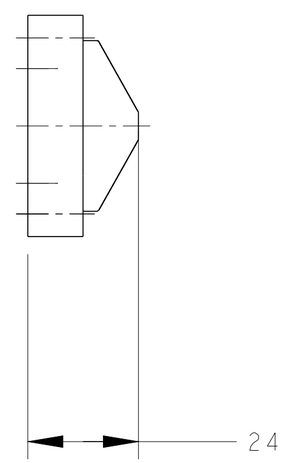
24