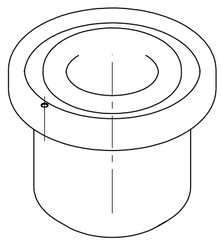

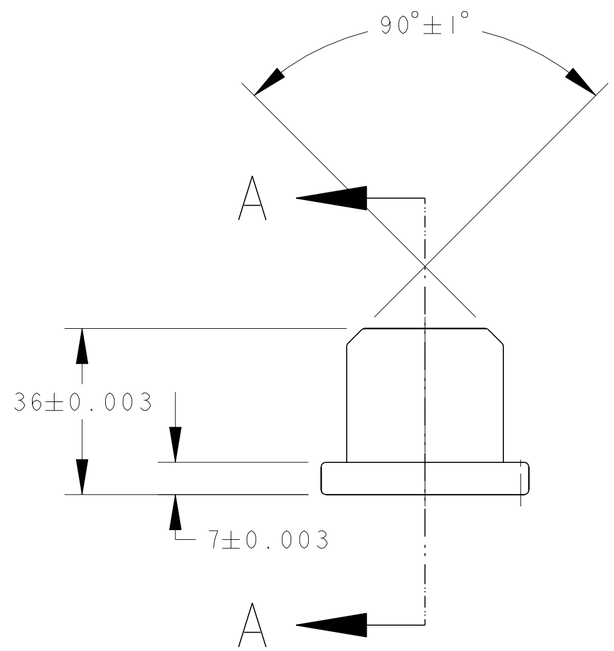
90°±1°
A
36±0.003
7±0.003
A

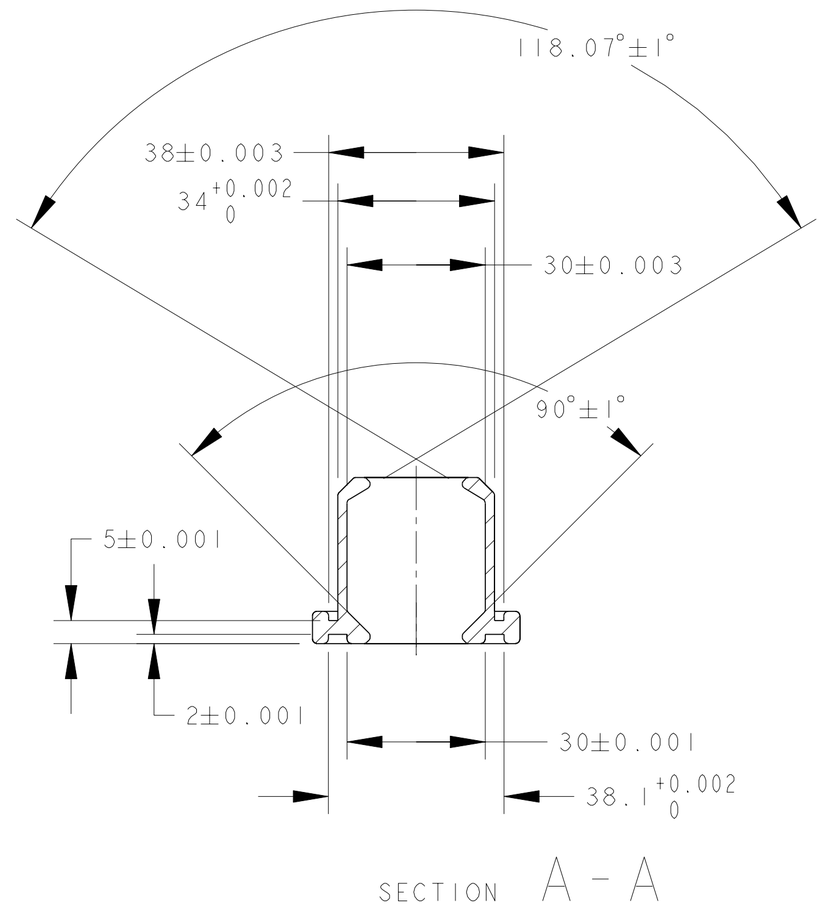
118.07°±1°
38±0.003
34 +0.002 0
30±0.003
90°±1°
5±0.001
2±0.001
30±0.001
38.1 +0.002 0
SECTION A - A

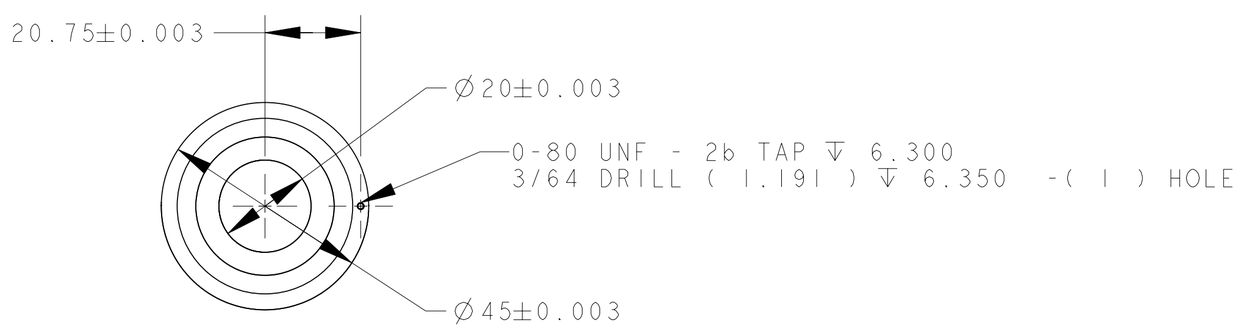
20.75±0.003
Ø20±0.003
0-80 UNF - 2b TAP ↧ 6.300
3/64 DRILL (1.191) ↧ 6.350 -(1) HOLE
Ø45±0.003