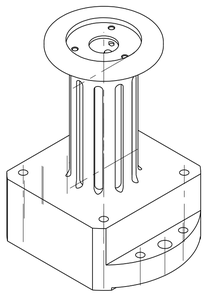

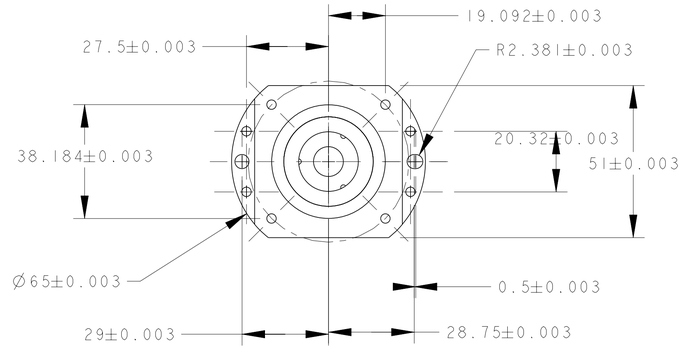
19.092±0.003
27.5±0.003
R2.381±0.003
38.184±0.003
20.32±0.003
51±0.003
Ø65±0.003
0.5±0.003
29±0.003
28.75±0.003

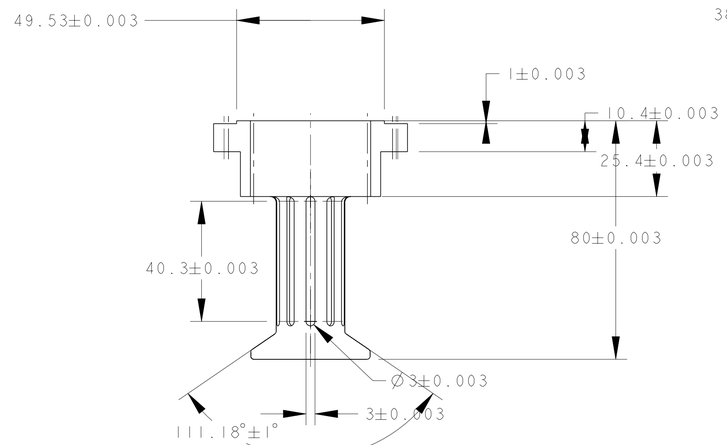
49.53±0.003
1±0.003
10.4±0.003
25.4±0.003
80±0.003
40.3±0.003
Ø3±0.003
3±0.003
111.18°±1°

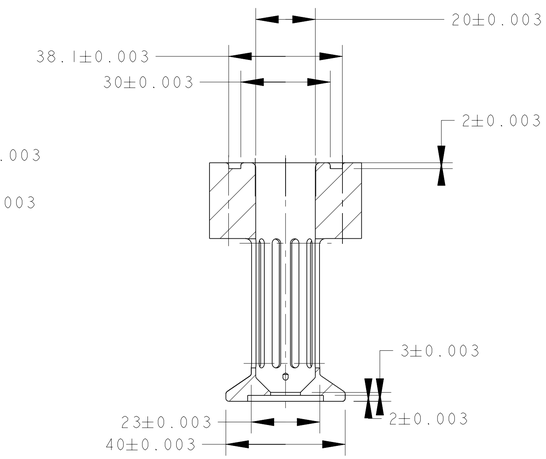
20±0.003
38.1±0.003
30±0.003
2±0.003
3±0.003
23±0.003
2±0.003
40±0.003

SECTION A - A

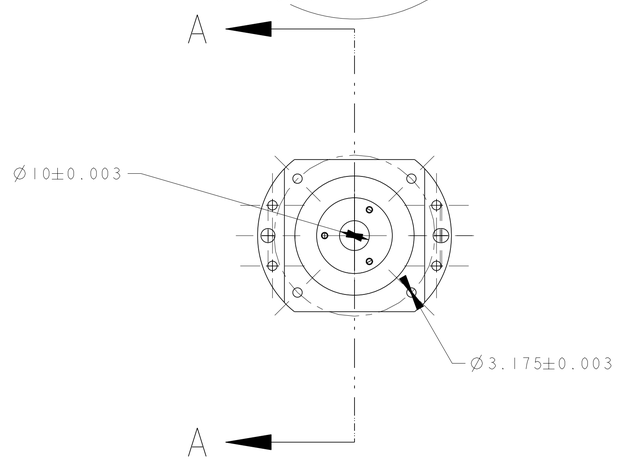
A
Ø10±0.003
Ø3.175±0.003
A