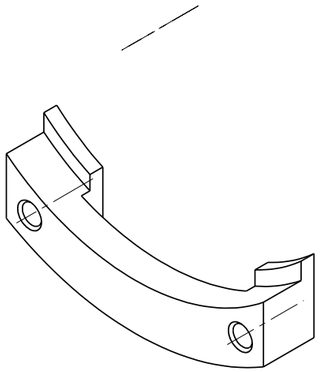

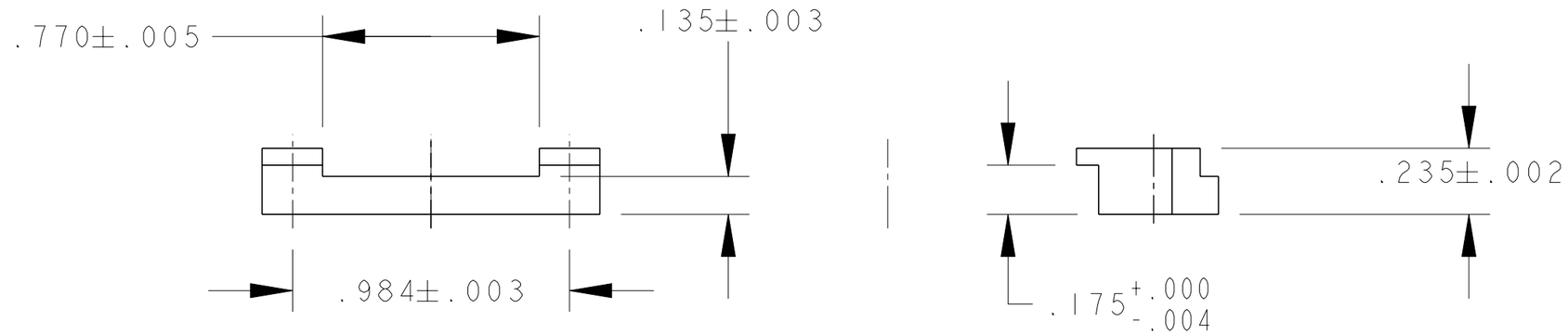
.770±.005
.135±.003
.984±.003
.235±.002
.175 +.000 -.004

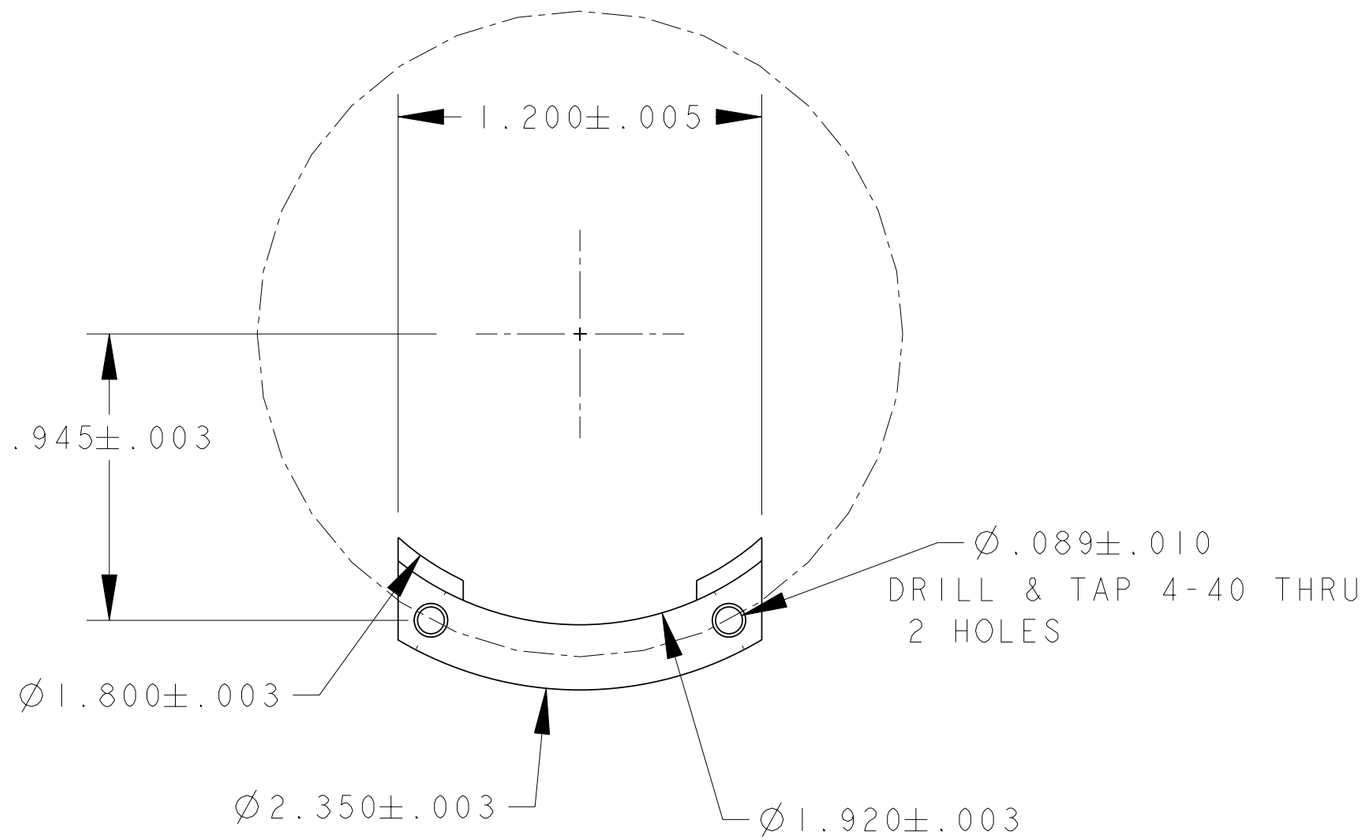
1.200±.005
.945±.003
Ø.089±.010
DRILL & TAP 4-40 THRU
2 HOLES
Ø1.800±.003
Ø2.350±.003
Ø1.920±.003