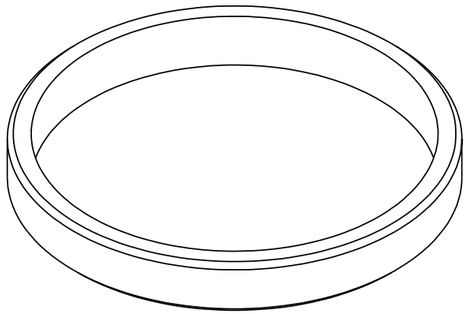

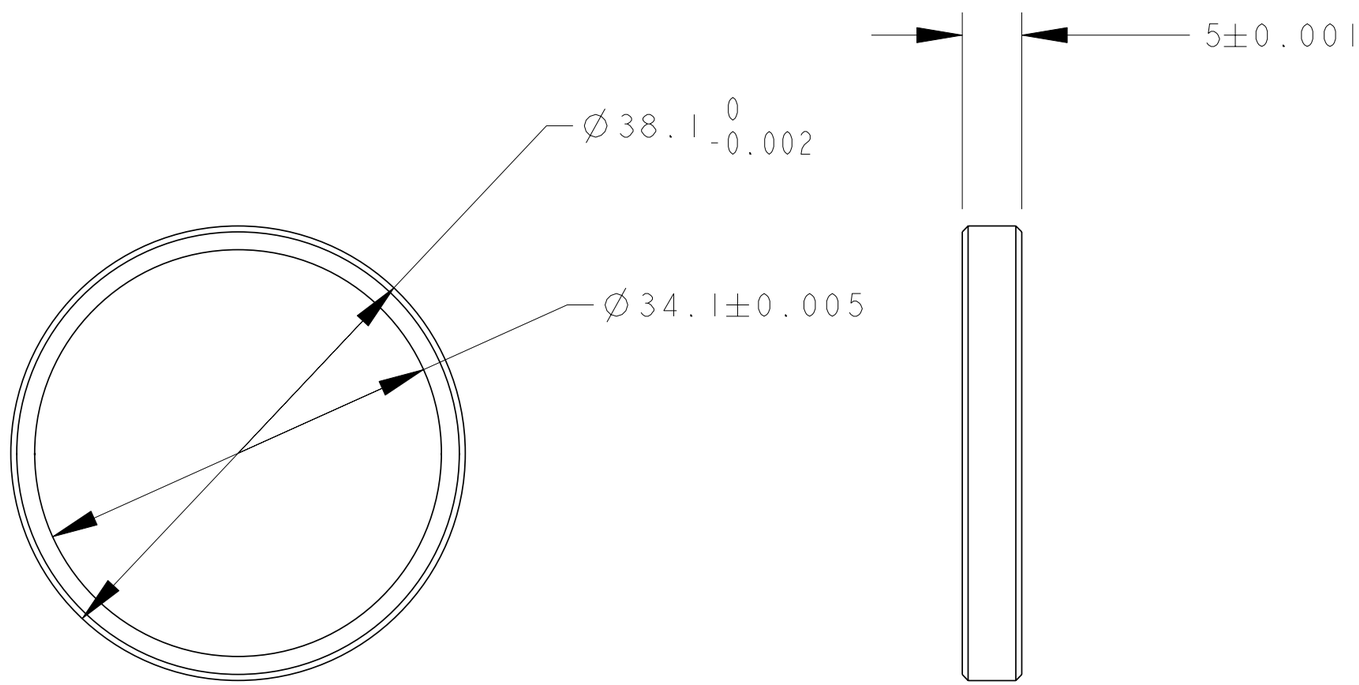
5±0.001
Ø38.1 0 -0.002
Ø34.1±0.005