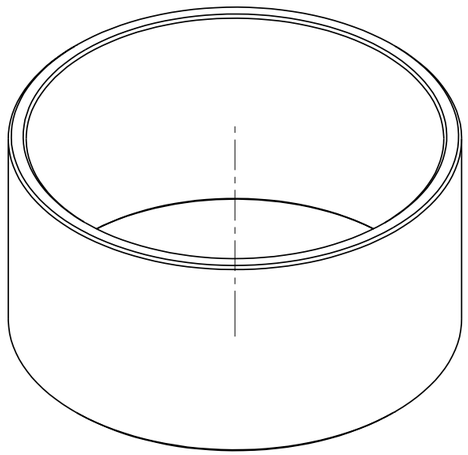

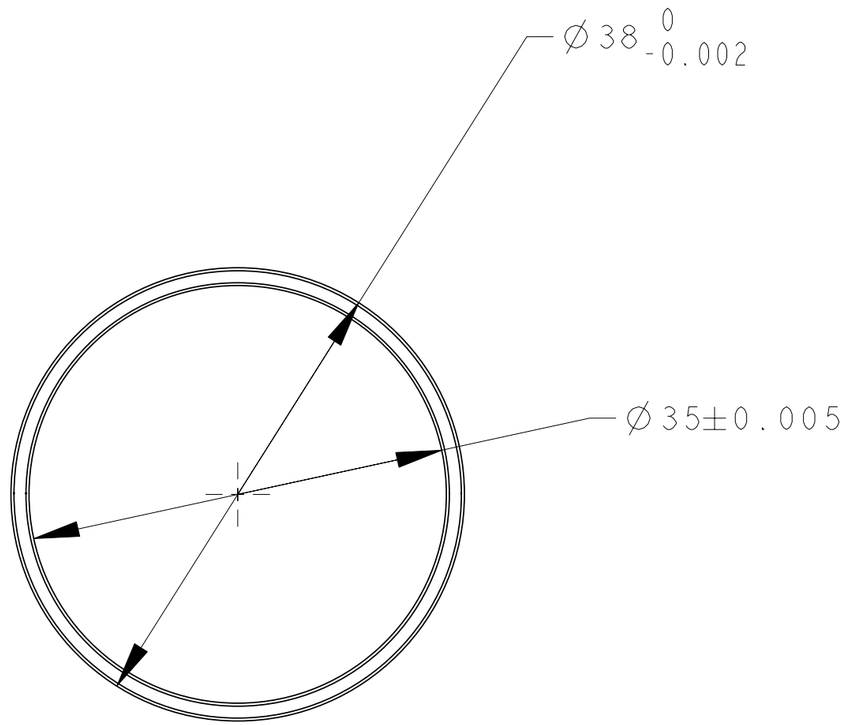
Ø38 0 -0.002
Ø35±0.005

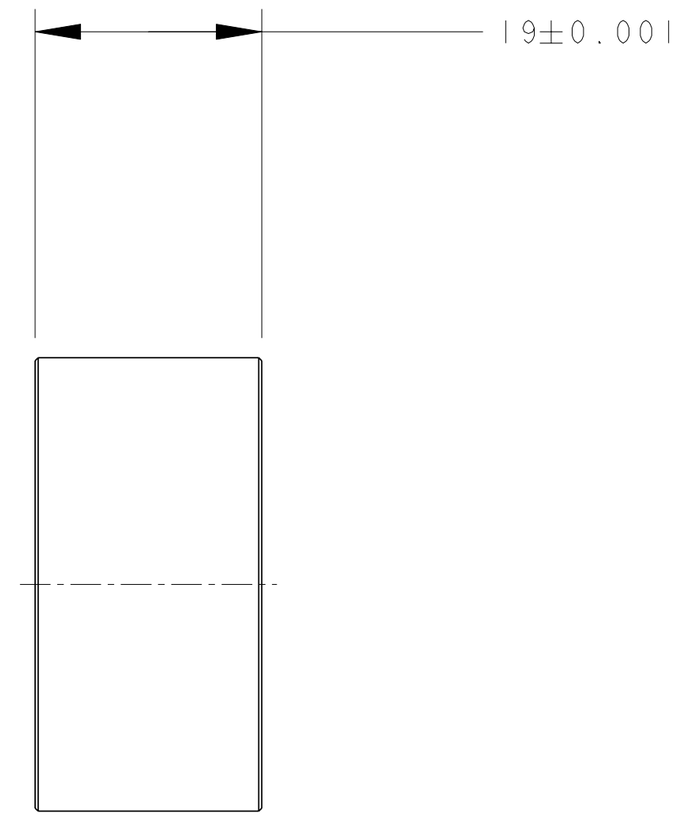
19±0.001