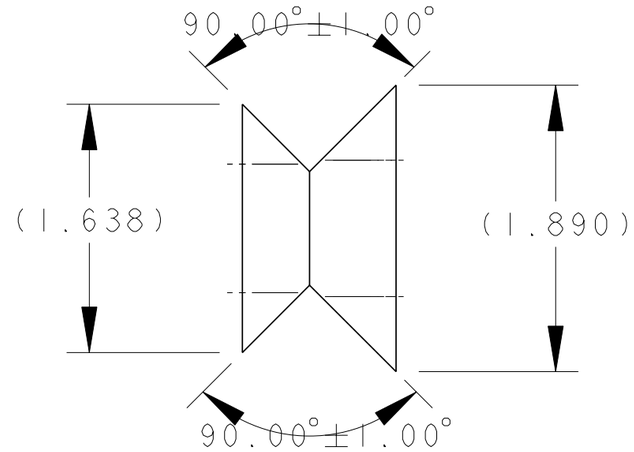
90.00°±1.00°
(1.638)
(1.890)
90.00°±1.00°

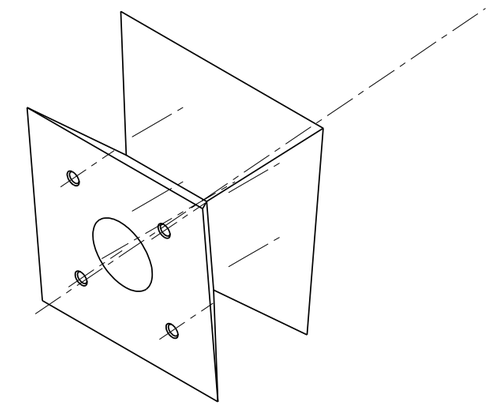

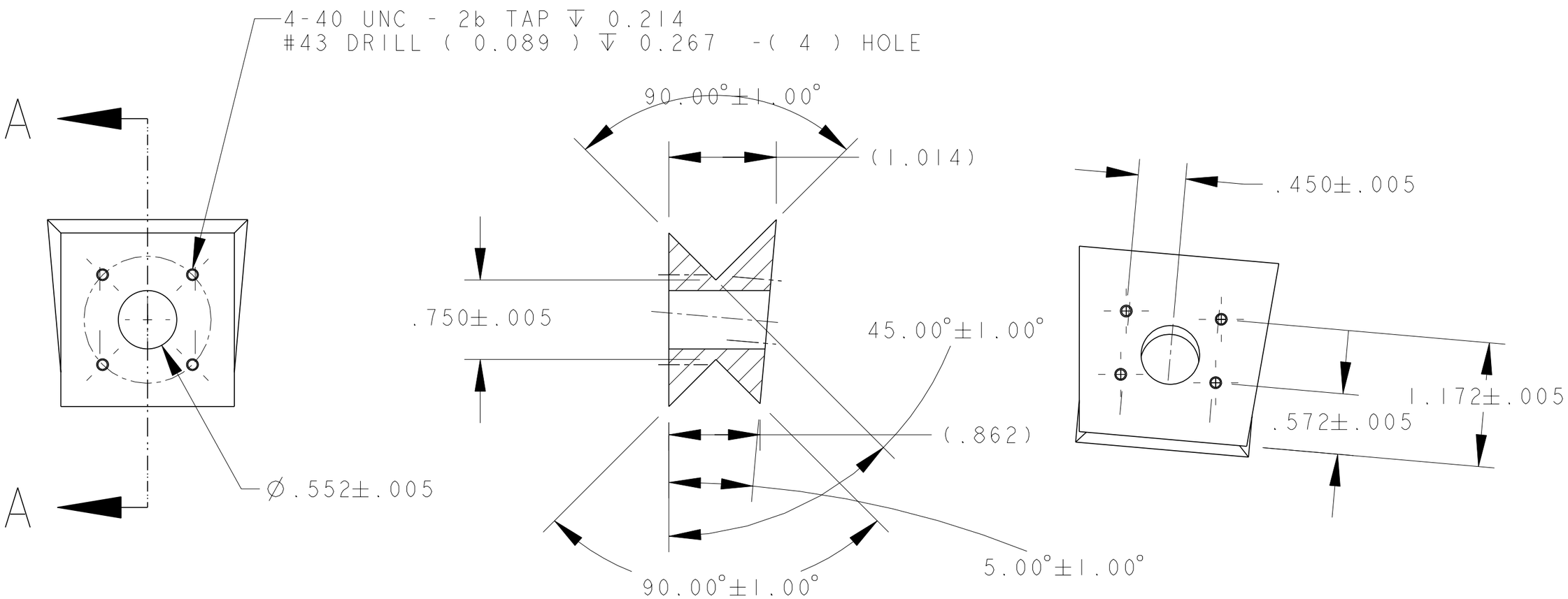
4-40 UNC - 2b TAP ↧ 0.214
#43 DRILL (0.089) ↧ 0.267 -(4) HOLE
A
A
Ø.552±.005
90.00°±1.00°
(1.014)
.750±.005
45.00°±1.00°
(.862)
90.00°±1.00°
5.00°±1.00°
.450±.005
1.172±.005
.572±.005
SECTION A - A