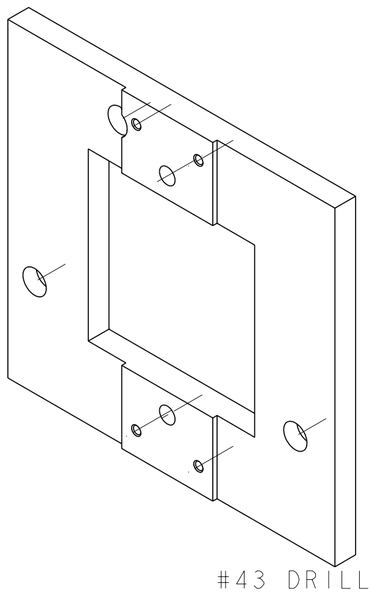

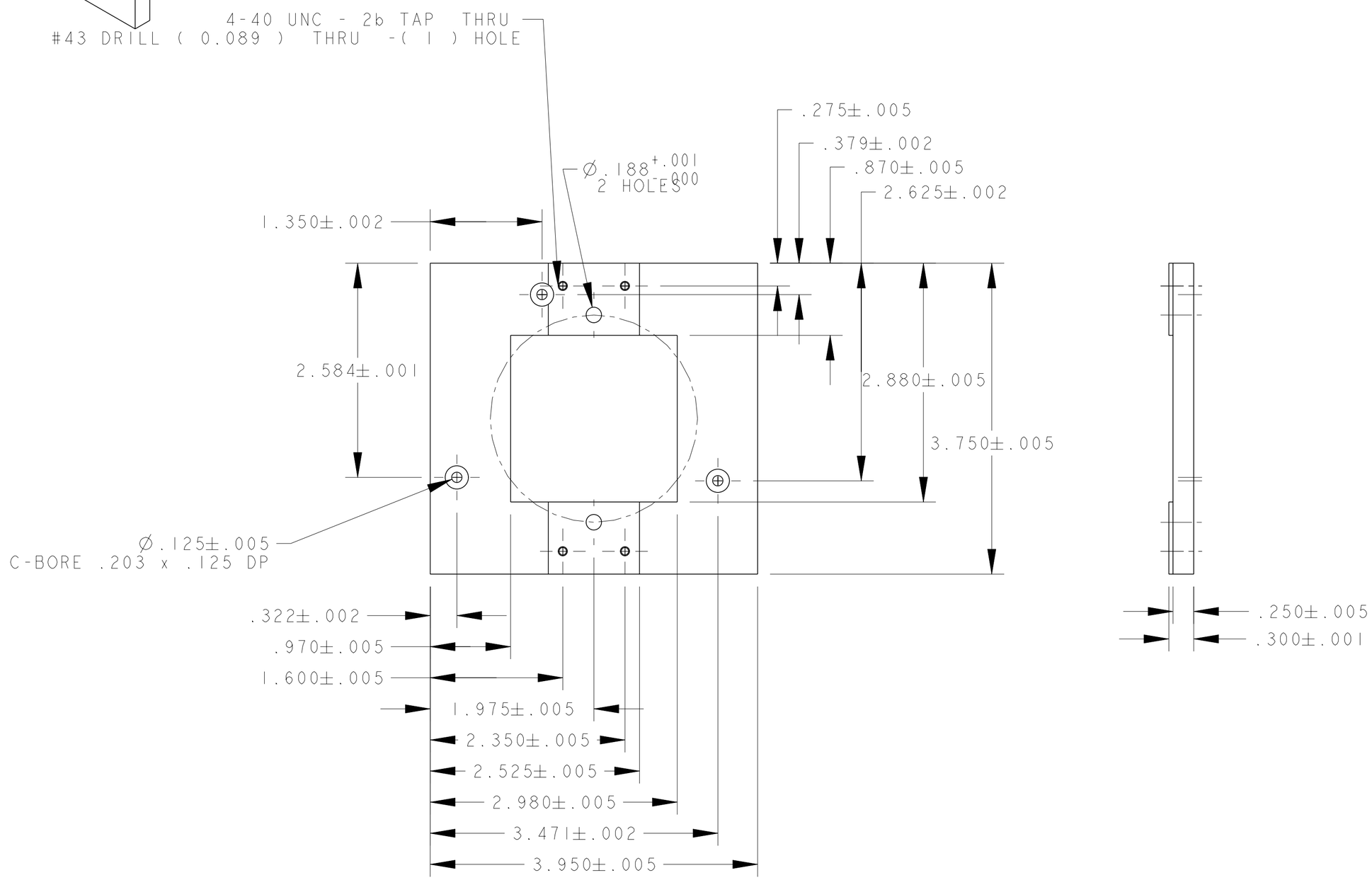
4-40 UNC - 2b TAP THRU
#43 DRILL (0.089) THRU -(1) HOLE
Ø.188 +.001 -.000
2 HOLES
.275±.005
.379±.002
.870±.005
2.625±.002
1.350±.002
2.584±.001
2.880±.005
3.750±.005
Ø.125±.005
C-BORE .203 x .125 DP
.322±.002
.970±.005
1.600±.005
1.975±.005
2.350±.005
2.525±.005
2.980±.005
3.471±.002
3.950±.005
.250±.005
.300±.001