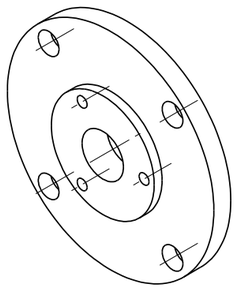

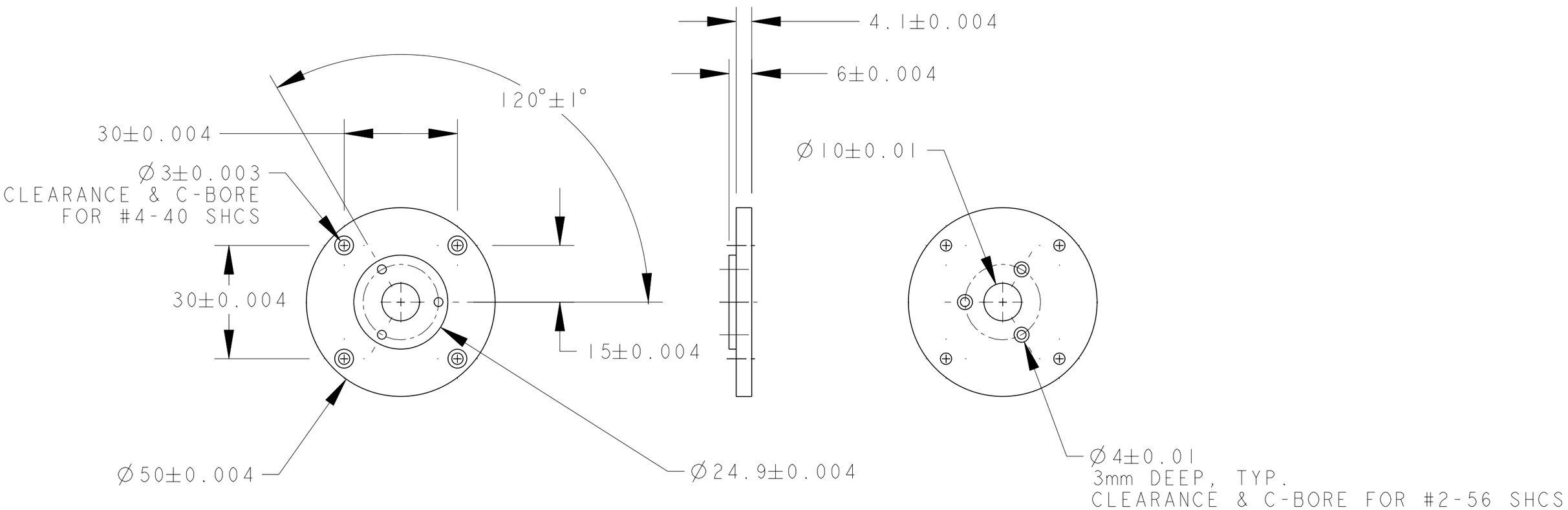
4.1±0.004
6±0.004
120°±1°
30±0.004
∅3±0.003
CLEARANCE & C-BORE
FOR #4-40 SHCS
30±0.004
15±0.004
∅50±0.004
∅24.9±0.004
∅10±0.01
∅4±0.01
3mm DEEP, TYP.
CLEARANCE & C-BORE FOR #2-56 SHCS