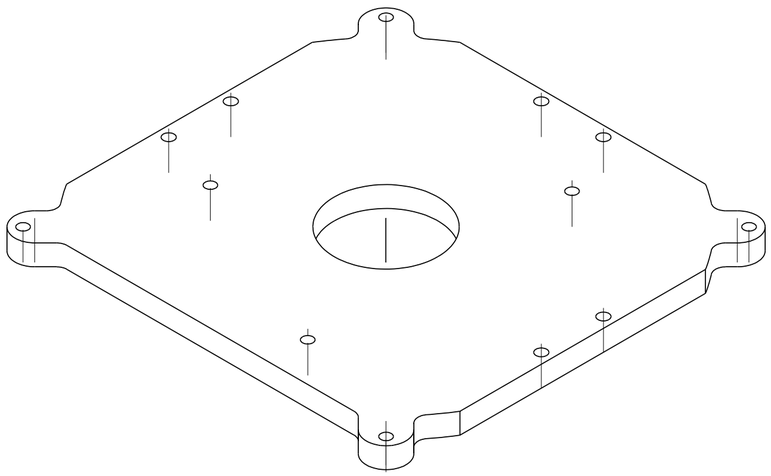

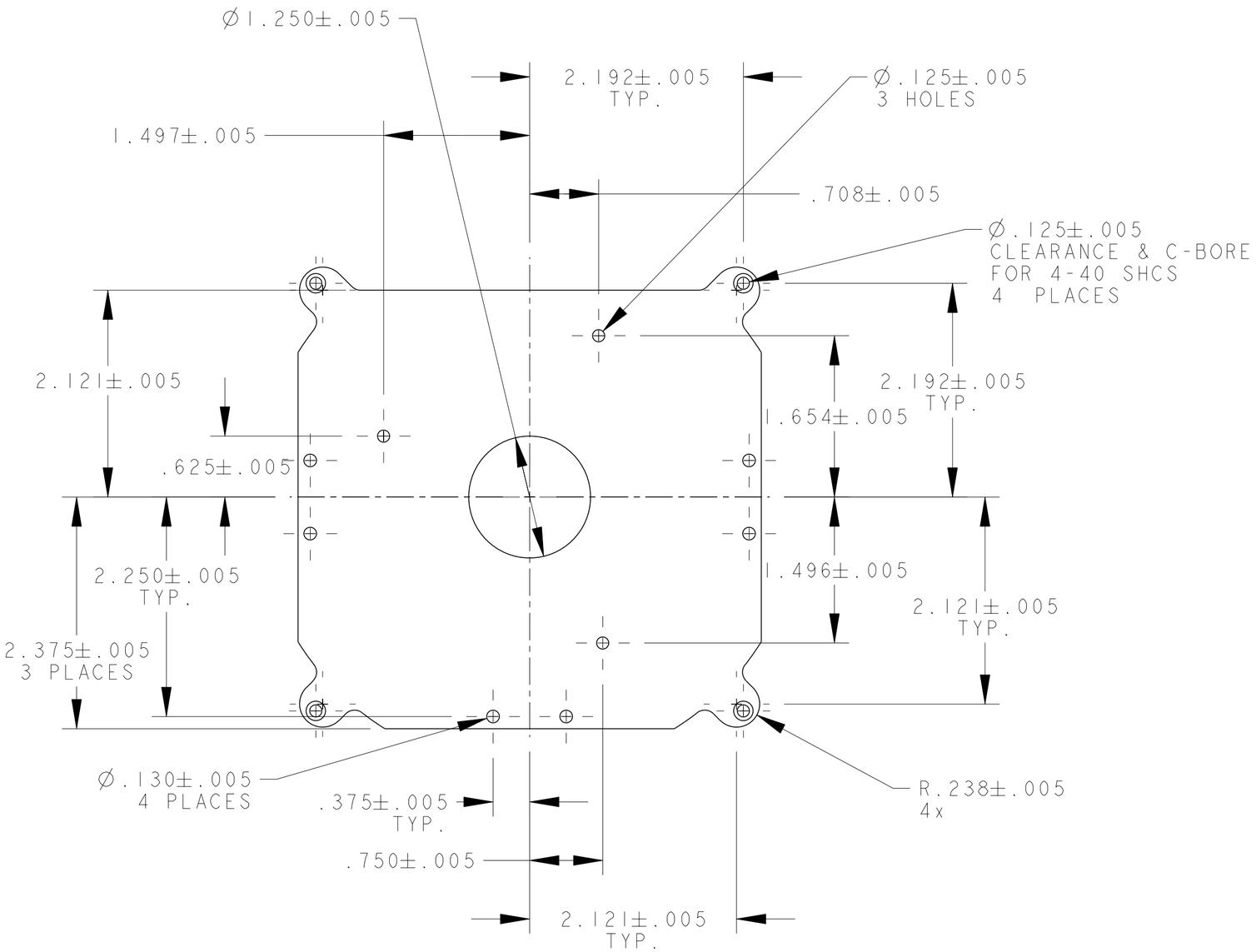
Ø1.250±.005
2.192±.005
TYP.
Ø.125±.005
3 HOLES
1.497±.005
.708±.005
Ø.125±.005
CLEARANCE & C-BORE
FOR 4-40 SHCS
4 PLACES
2.121±.005
2.192±.005
TYP.
1.654±.005
.625±.005
2.250±.005
TYP.
1.496±.005
2.121±.005
TYP.
2.375±.005
3 PLACES
Ø.130±.005
4 PLACES
.375±.005
TYP.
R.238±.005
4x
.750±.005
2.121±.005
TYP.

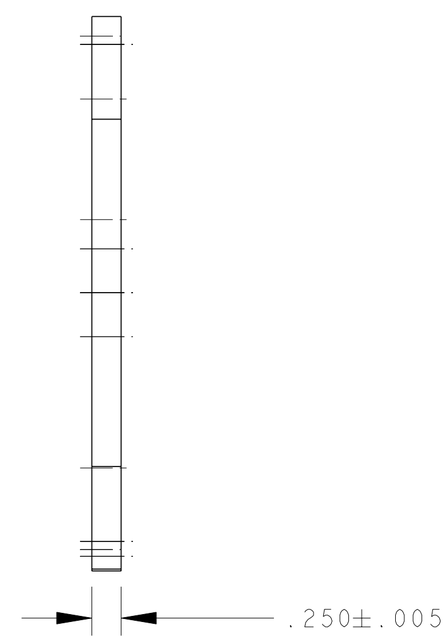
.250±.005