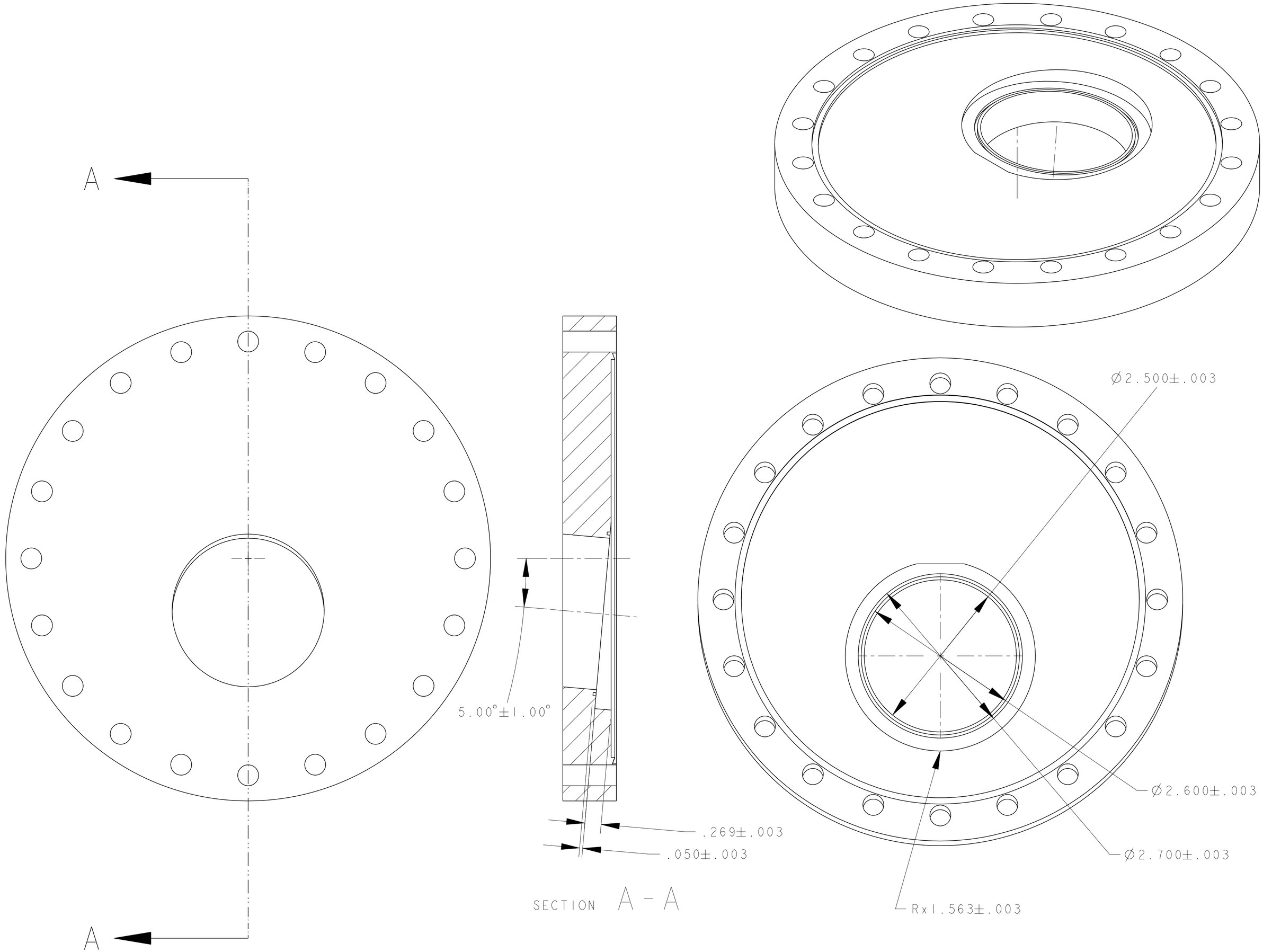
A
A
5.00°±1.00°
.269±.003
.050±.003
SECTION A - A
Ø2.500±.003
Ø2.600±.003
Ø2.700±.003
Rx1.563±.003