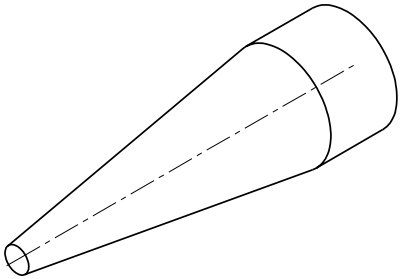

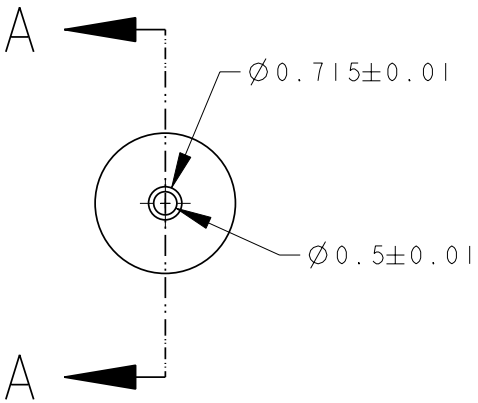
A
A
∅0.715±0.01
∅0.5±0.01

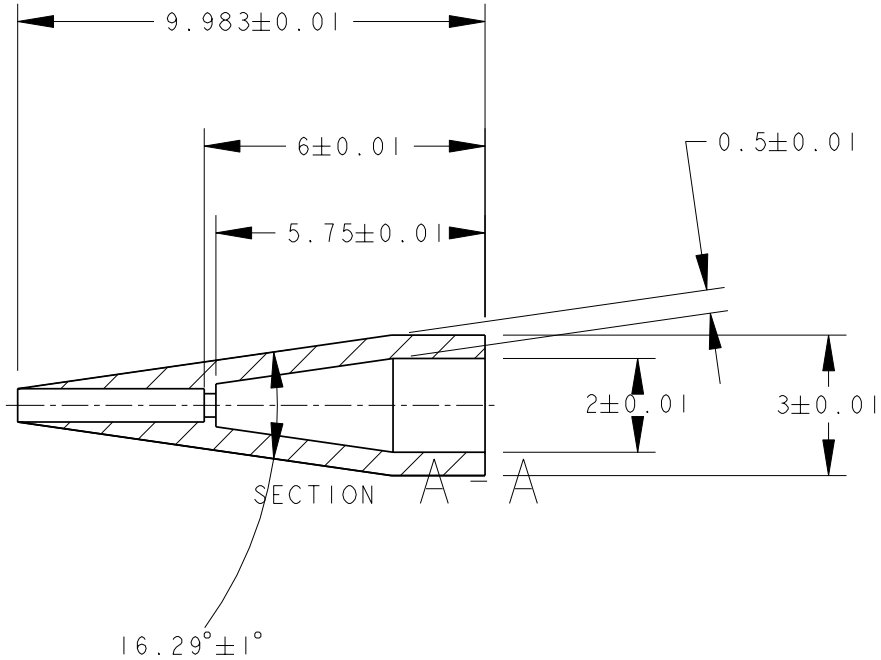
9.983±0.01
6±0.01
5.75±0.01
0.5±0.01
2±0.01
3±0.01
SECTION A – A
16.29°±1°