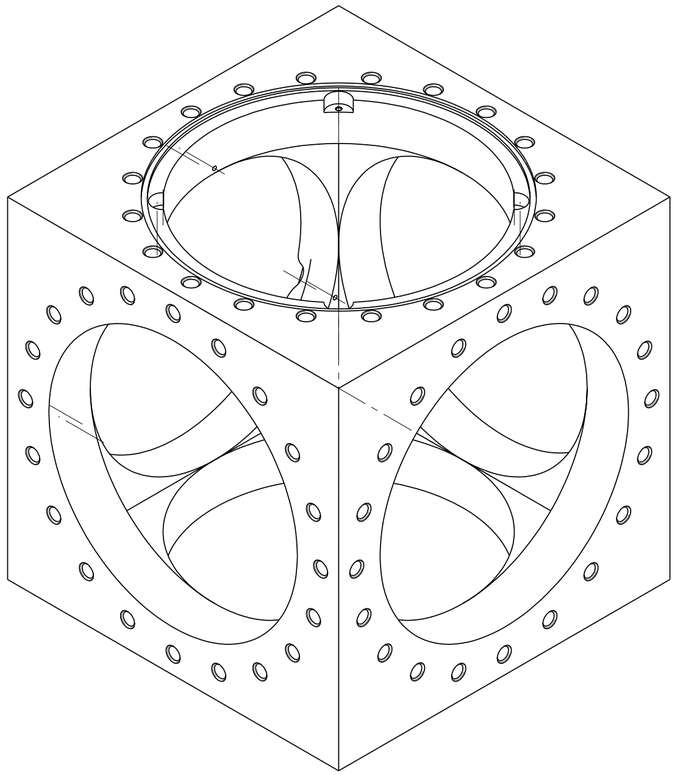

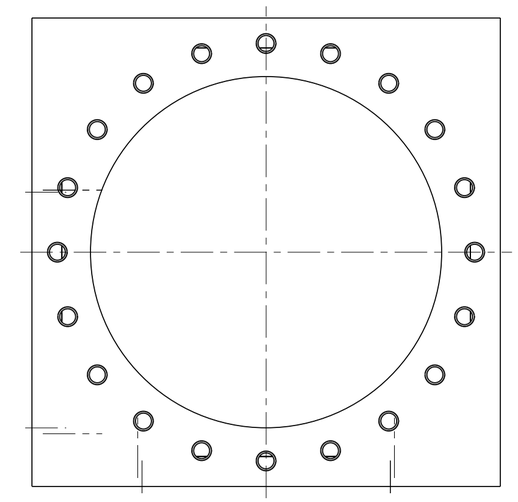

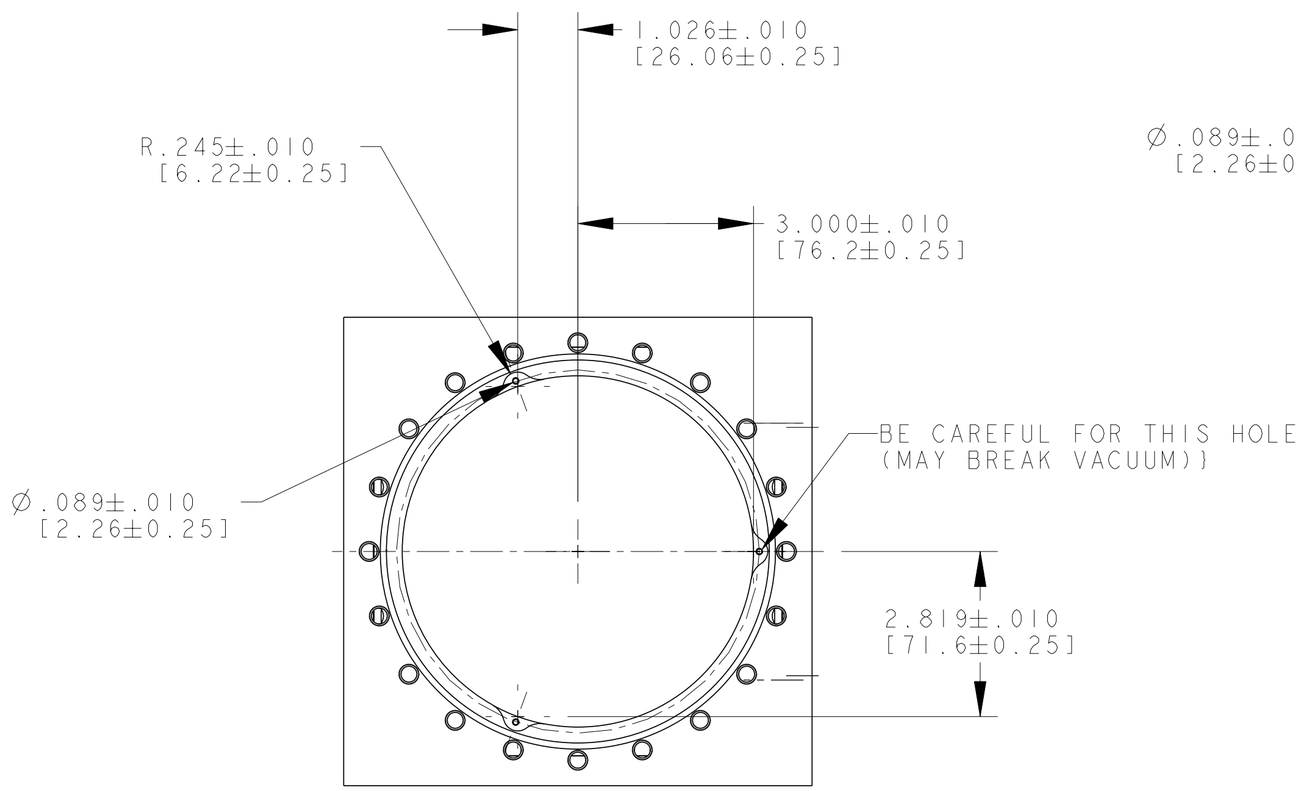
1.026±.010
[26.06±0.25]
R.245±.010
[6.22±0.25]
3.000±.010
[76.2±0.25]
BE CAREFUL FOR THIS HOLE
(MAY BREAK VACUUM)}
Ø.089±.010
[2.26±0.25]
2.819±.010
[71.6±0.25]

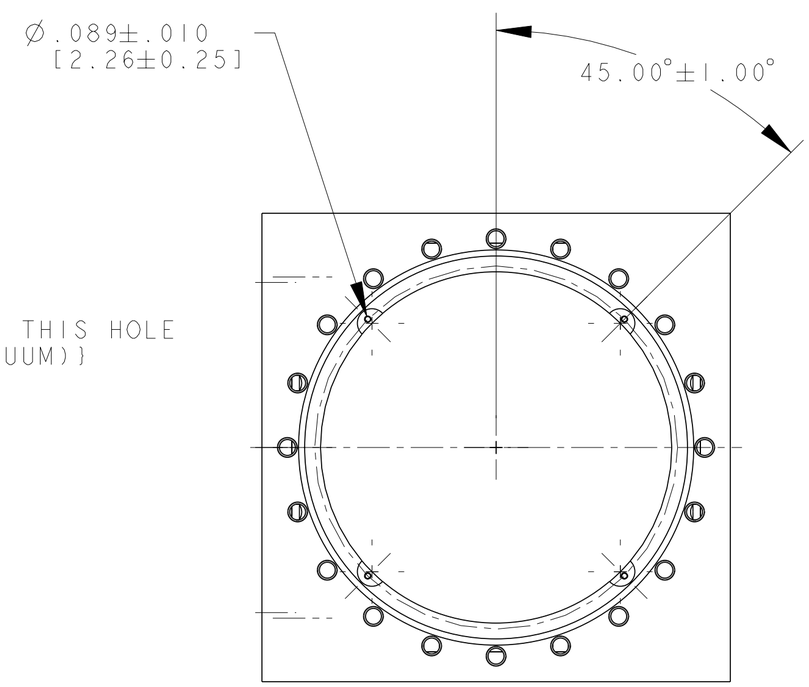
Ø.089±.010
[2.26±0.25]
45.00°±1.00°