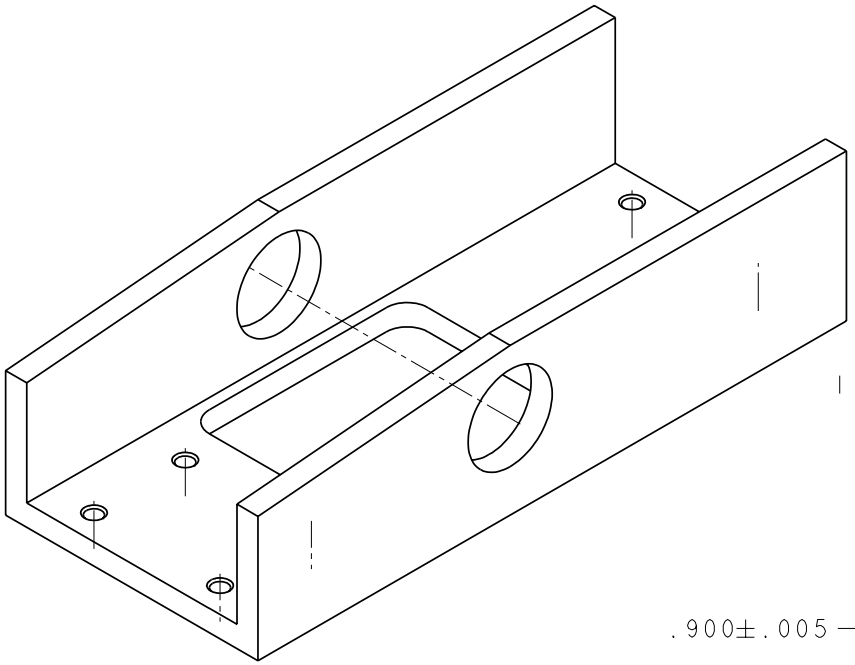

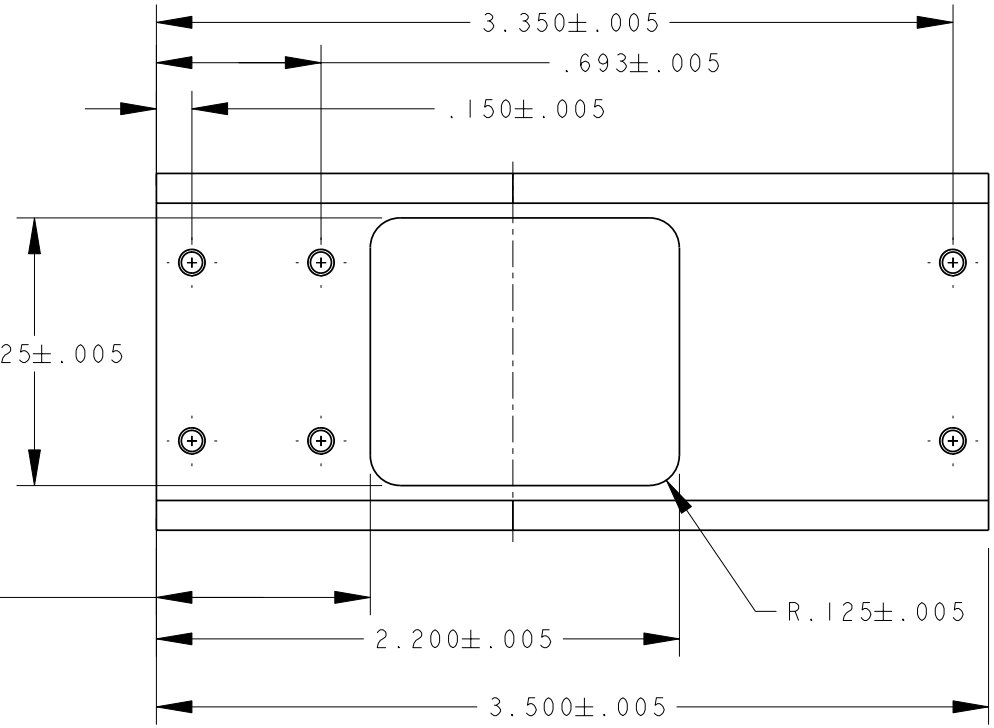
3.350±.005
.693±.005
.150±.005
1.125±.005
.900±.005
R.125±.005
2.200±.005
3.500±.005

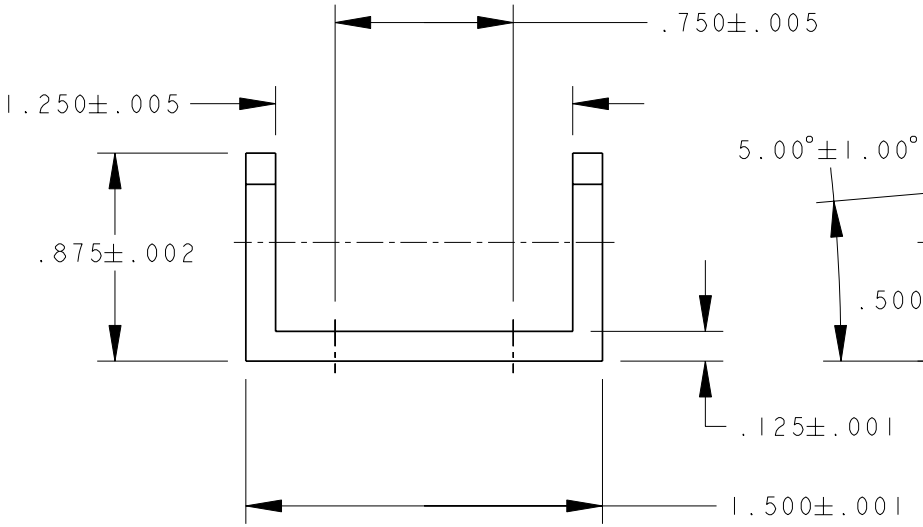
.750±.005
1.250±.005
.875±.002
.125±.001
1.500±.001

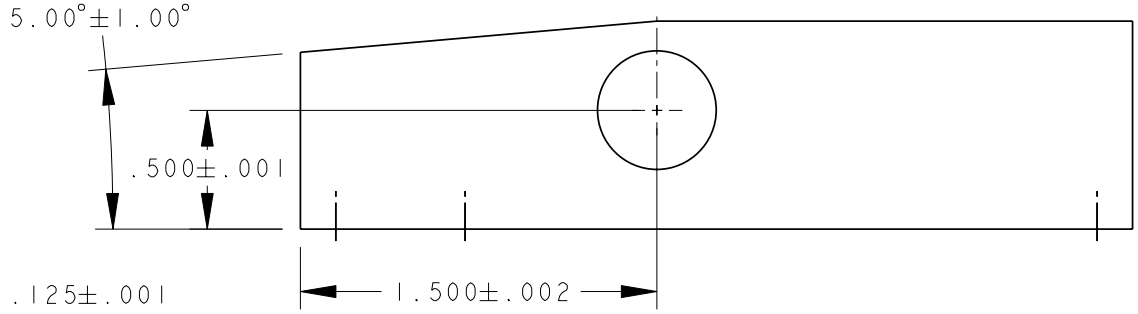
5.00°±1.00°
.500±.001
1.500±.002