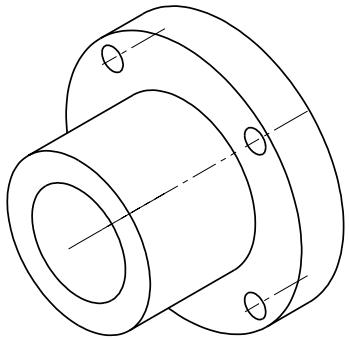

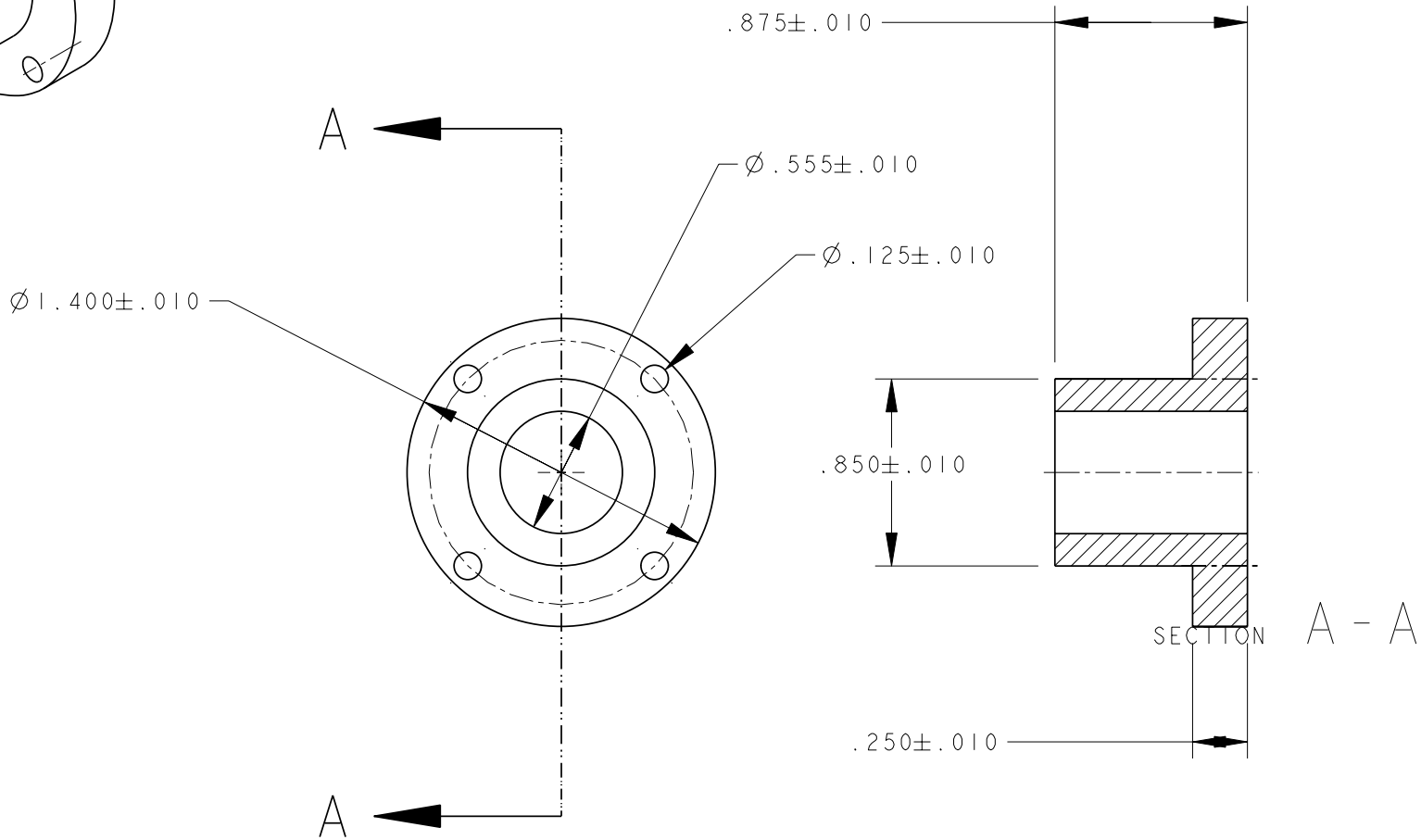
A
A
Ø.555±.010
Ø.125±.010
Ø1.400±.010
.875±.010
.850±.010
.250±.010
SECTION A - A