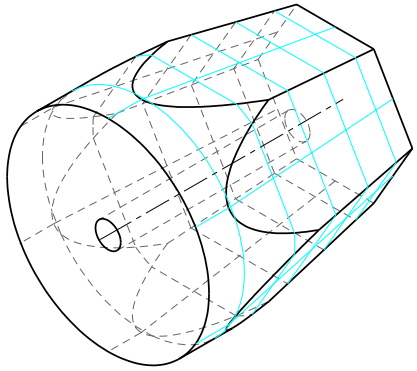

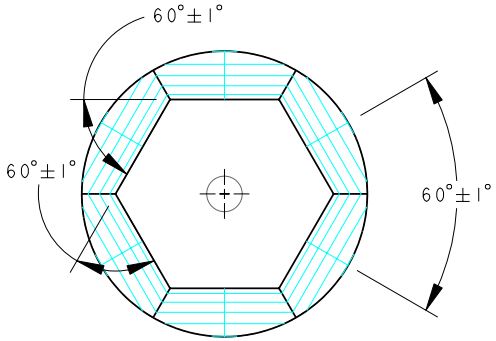
60°±1°
60°±1°
60°±1°

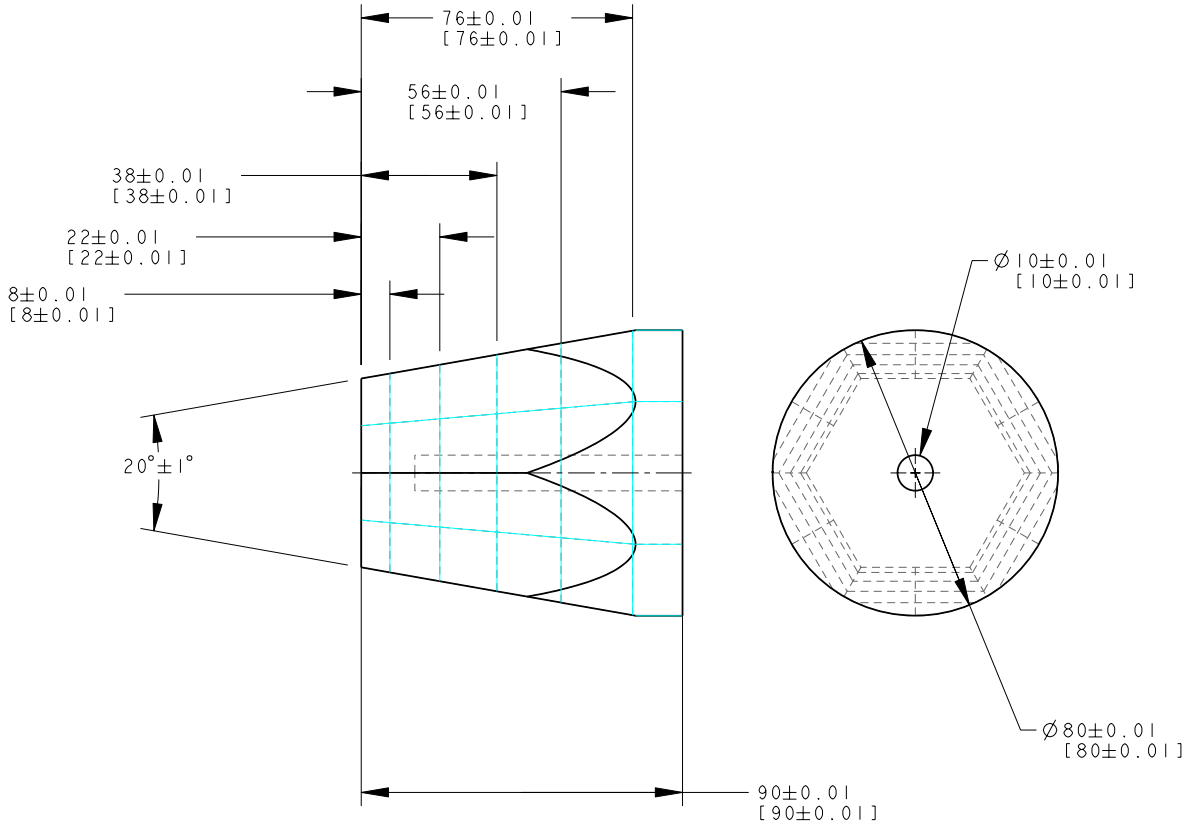
76±0.01
[76±0.01]
56±0.01
[56±0.01]
38±0.01
[38±0.01]
22±0.01
[22±0.01]
8±0.01
[8±0.01]
20°±1°
Ø10±0.01
[10±0.01]
Ø80±0.01
[80±0.01]
90±0.01
[90±0.01]