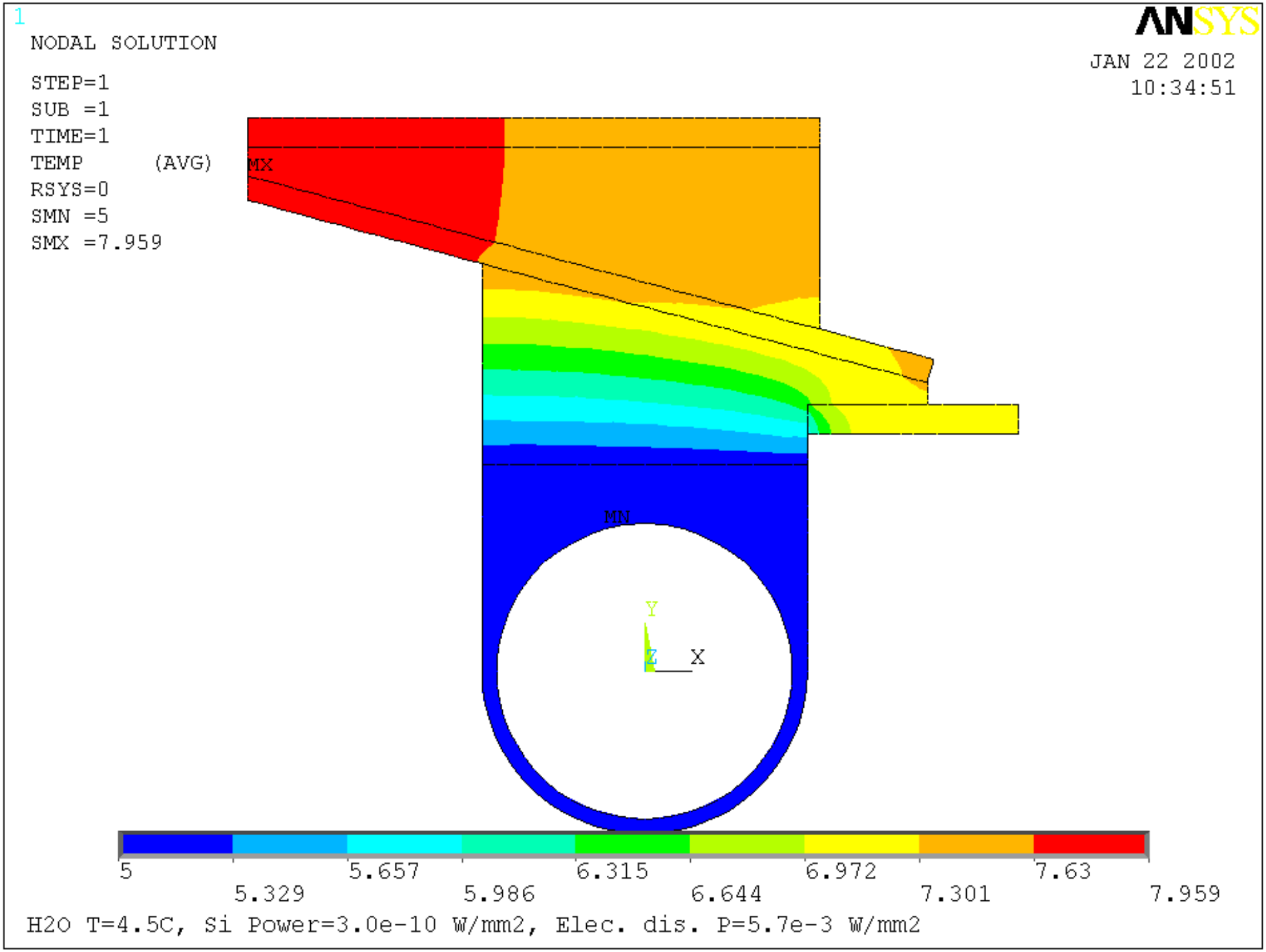
1
NODAL SOLUTION
STEP=1
SUB =1
TIME=1
TEMP (AVG)
RSYS=0
SMN =5
SMX =7.959
ANSYS
JAN 22 2002
10:34:51
MX
MN
Y
Z
X
5
5.329
5.657
5.986
6.315
6.644
6.972
7.301
7.63
7.959
H2O T=4.5C, Si Power=3.0e-10 W/mm2, Elec. dis. P=5.7e-3 W/mm2

1

ELEMENTS

MAT NUM

ANSYS

JAN 22 2002
10:36:27

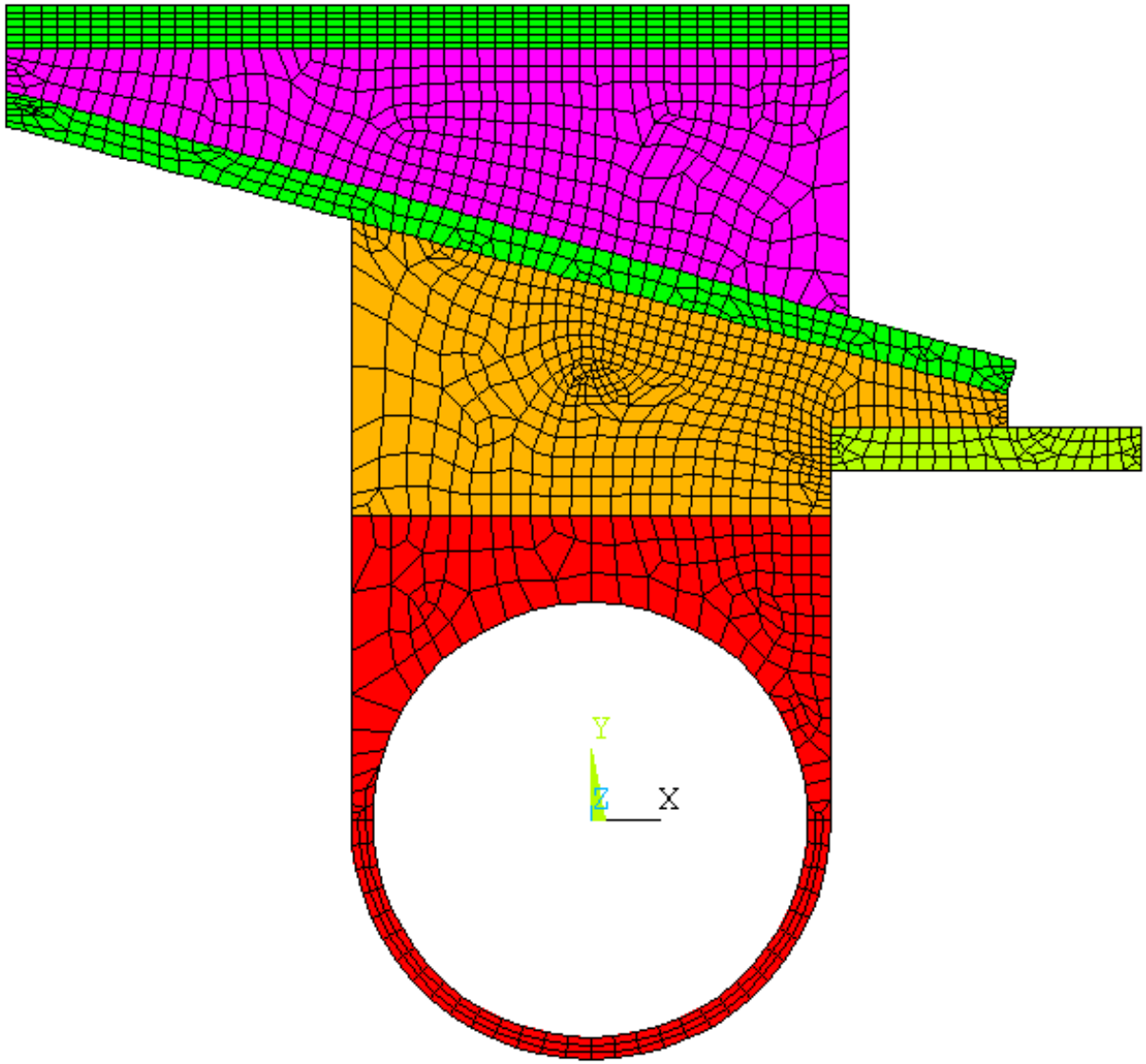

H2O T=4.5C, Si Power=3.0e-10 W/mm2, Elec. dis. P=5.7e-3 W/mm2