REQ	ITEM	PART NUMBER	DESCRIPTION
1	1	21C9976	LEBT INSULATOR FLANGE
1	2	21G8126	65 KV INSULATOR FINISH MACHINING
16	3	-	DU BEARING PAD MATERIAL, .0895" THK X 1" SQUARE
2	4	21G8131	BRASS ALINGMENT PLUG
A/R	5	EA 9359.3	HYSOL 2-PART ADHESIVE, 50 ML SEMPAK

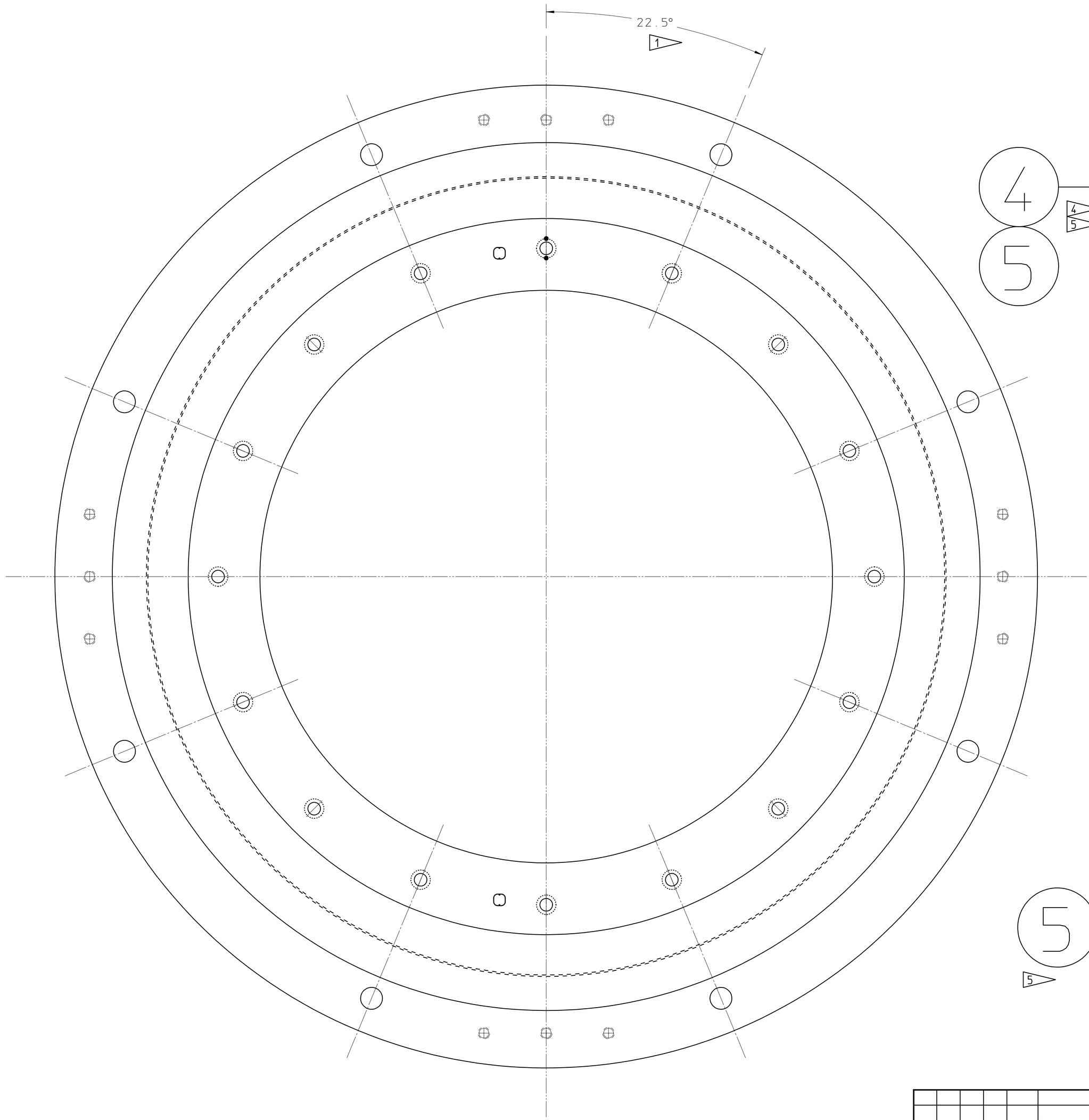

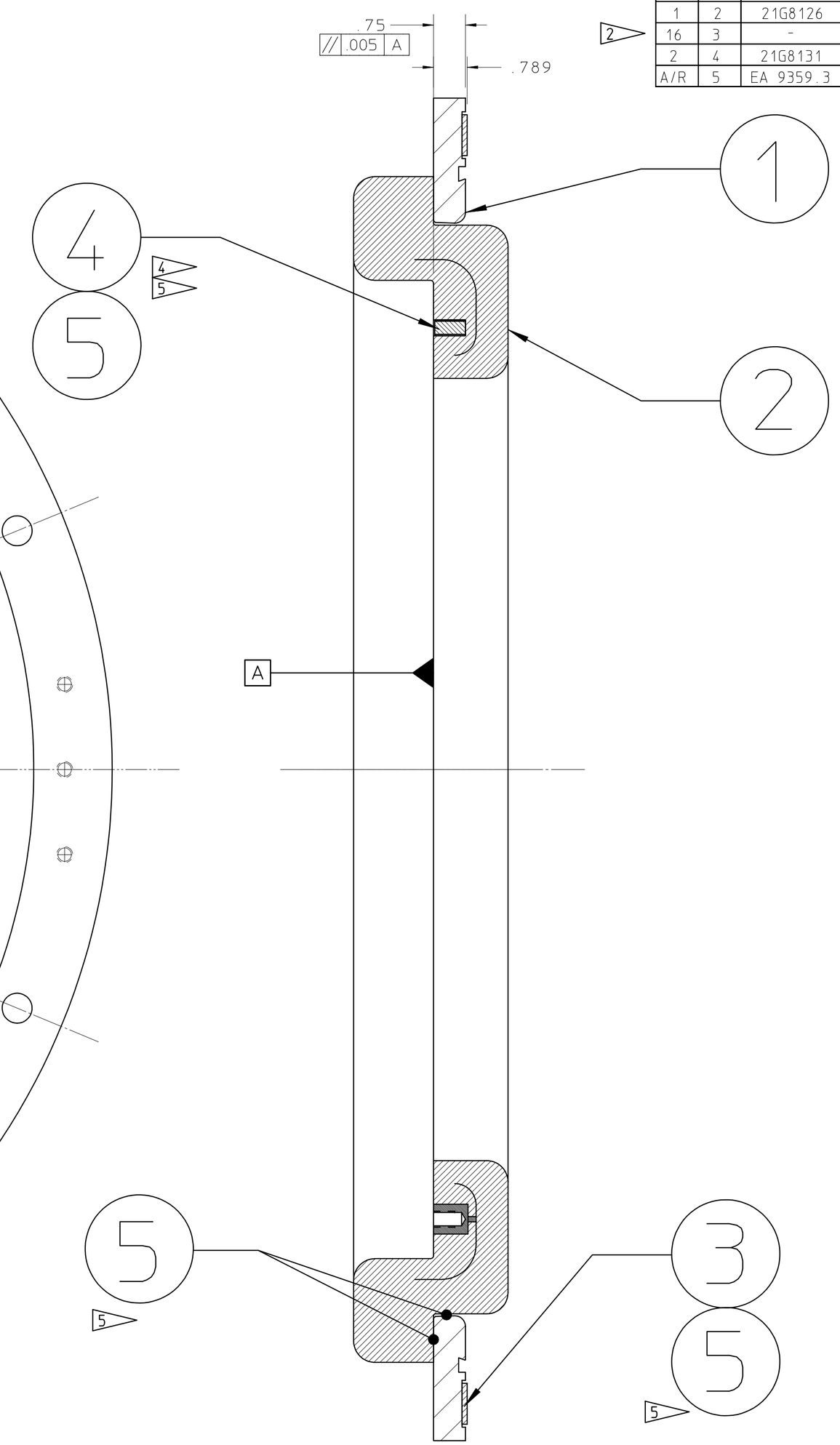

NOTE:

1. THIS ANGLE SETS THE ORIENTATION OF THE HOLE PATTERN OF THE STEEL FLANGE WITH RESPECT TO THE EPOXY CASTING.
2. DU BEARING PAD MATERIAL CAN BE OBTAINED IN 5" X 18" SHEETS FROM APPLIED MOTION TECHNOLOGY OAKLAND, CA (510) 568-6690
3. WIPE ALL PARTS DOWN WITH ACETONE, FOLLOWED BY ALCOHOL PRIOR TO GLUE-UP OF ALL PARTS.
4. ENSURE THAT ITEM 4 SITS FLUSH OR BELOW THE SURFACE BEFORE BEING ALLOWED TO SET.
5. ALL EXCESS EPOXY SHALL BE WIPED UP USING ALCOHOL AND WIPES,

21G8964A

REV	DWG	CHK	ZONE	DATE	CHANGES
A	DWC		-	10/27/01	GENERAL GEOMETRY UPDATE

UNLESS OTHERWISE SPECIFIED

TOLERANCES: X ± .1 — FRAC. ± 1/64; XX ± .01 — ANGLES ± 1°; XXX ± .005 — FINISH 64 √

THREADS ARE CLASS 2
CHAMFER ENDS OF ALL SCREW THREADS 30°.
CUT 1.5 PITCH THRD RELIEF WITH ROUND NOSE TOOL ON MACHINE CUT THREADS.
BREAK EDGES .016 MAX. ON MACHINED WORK
REMOVE BURRS WELD SPLATTER & LOOSE SCALE
REFERENCES: ANSI Y14.5 & B46.1.

SHOP ORDERS

ACCT. NO.		SERIAL NO.	
DATE ISSD	DATE REQD.	NO REQD.	
DELIVER TO			
SURFACE TREATMENT	DEGREASE		
IDENT. METH.	TAG		
DWG. BY	S. MUKHERJEE	DATE	06-04-99
CHK. BY	D. CHENG	DATE	6/15/99

LAWRENCE BERKELEY LABORATORY
UNIVERSITY OF CALIFORNIA-BERKELEY

SNS - FRONT END SYSTEM
ION SOURCE PROTOTYPE DESIGN
LEBT INSULATOR FLANGE ASSEMBLY

PATENT CLEAR	DWG. TYPE	SHOWN ON	SCALE	DO NOT SCALE PRINTS
	ASSEMBLY		FULL	
MICROFILMED	DESIGN ACCT. NO.	CATEGORY CODE	DWG. NO.	SIZE / REV.
	8210-14	FE1100	21G8964	A