REQ	ITEM	PART NUMBER	DESCRIPTION
A/R	1	-	STAINLESS STEEL, TYPE 304

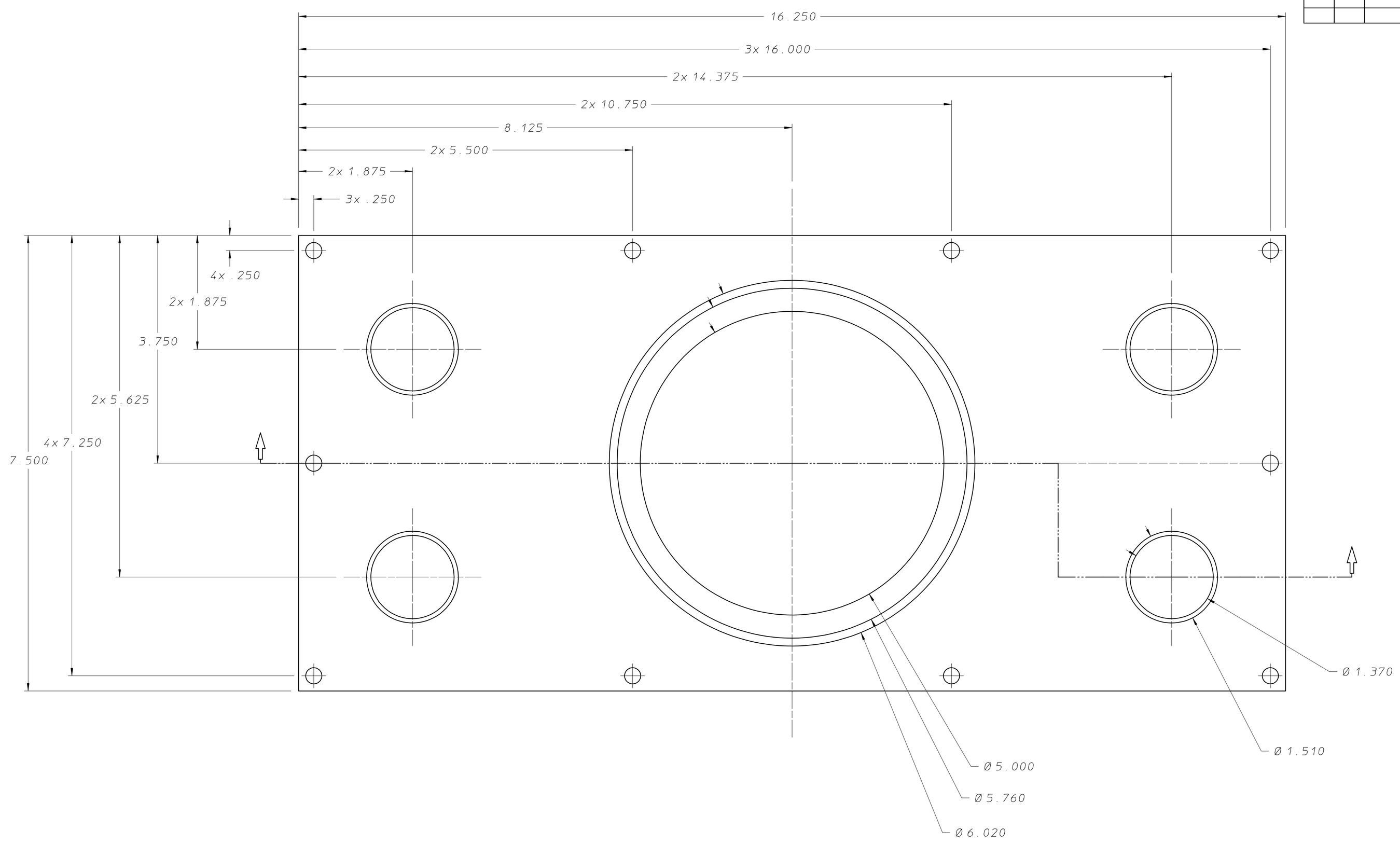

21G7504

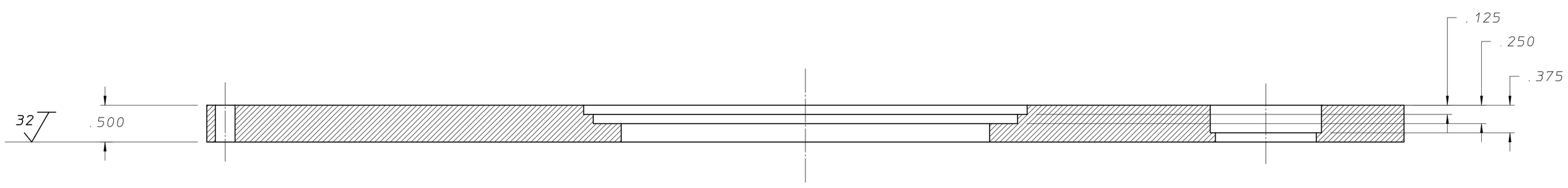

REV	DWG	CHK	ZONE	DATE	CHANGES

UNLESS OTHERWISE SPECIFIED

TOLERANCES: .X ± .1 FRAC. ± 1/64; .XX ± .01 ANGLES ± 1°; .XXX ± .005 FINISH 64

THREADS ARE CLASS 2
CHAMFER ENDS OF ALL SCREW THREADS 30°.
CUT 1.5 PITCH THRD RELIEF WITH ROUND NOSE TOOL ON MACHINE CUT THREADS.
BREAK EDGES .016 MAX. ON MACHINED WORK
REMOVE BURRS WELD SPLATTER & LOOSE SCALE
REFERENCES: ANSI Y14.5 & B46.1.

SHOP ORDERS

ACCT NO. 8212-CT | SERIAL NO.
DATE ISSD. | DATE REQD. | NO. REQD.
DELIVER TO
SURFACE TREATMENT DEGREASE
IDENT. METH. TAG
DWG. BY D. CHENG | DATE 11/30/99
CHK. BY | DATE

LAWRENCE BERKELEY LABORATORY
UNIVERSITY OF CALIFORNIA-BERKELEY

SNS-FES ION SOURCE AND LEBT
MECHANICAL SYSTEMS
VIEWPORT/VACUUM GAUGE FLANGE BLANK

PATENT CLEAR	DWG. TYPE	SHOWN ON	SCALE	DO NOT SCALE PRINTS
	DETAIL	21G7514	FULL	
MICROFILMED	DESIGN ACCT. NO.	CATEGORY CODE	DWG. NO.	SIZE / REV.
	8210-11	FE3111	21G7504	