21G7212	REQD	ITEM	PART NUMBER	DESCRIPTION
	A/R	1	-	STAINLESS STEEL, TYPE 304

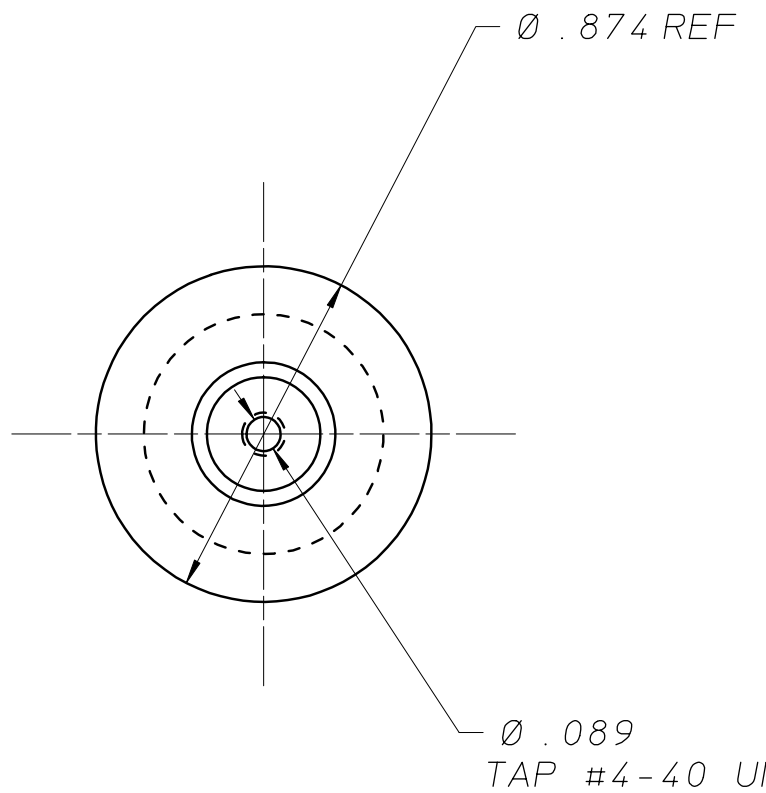

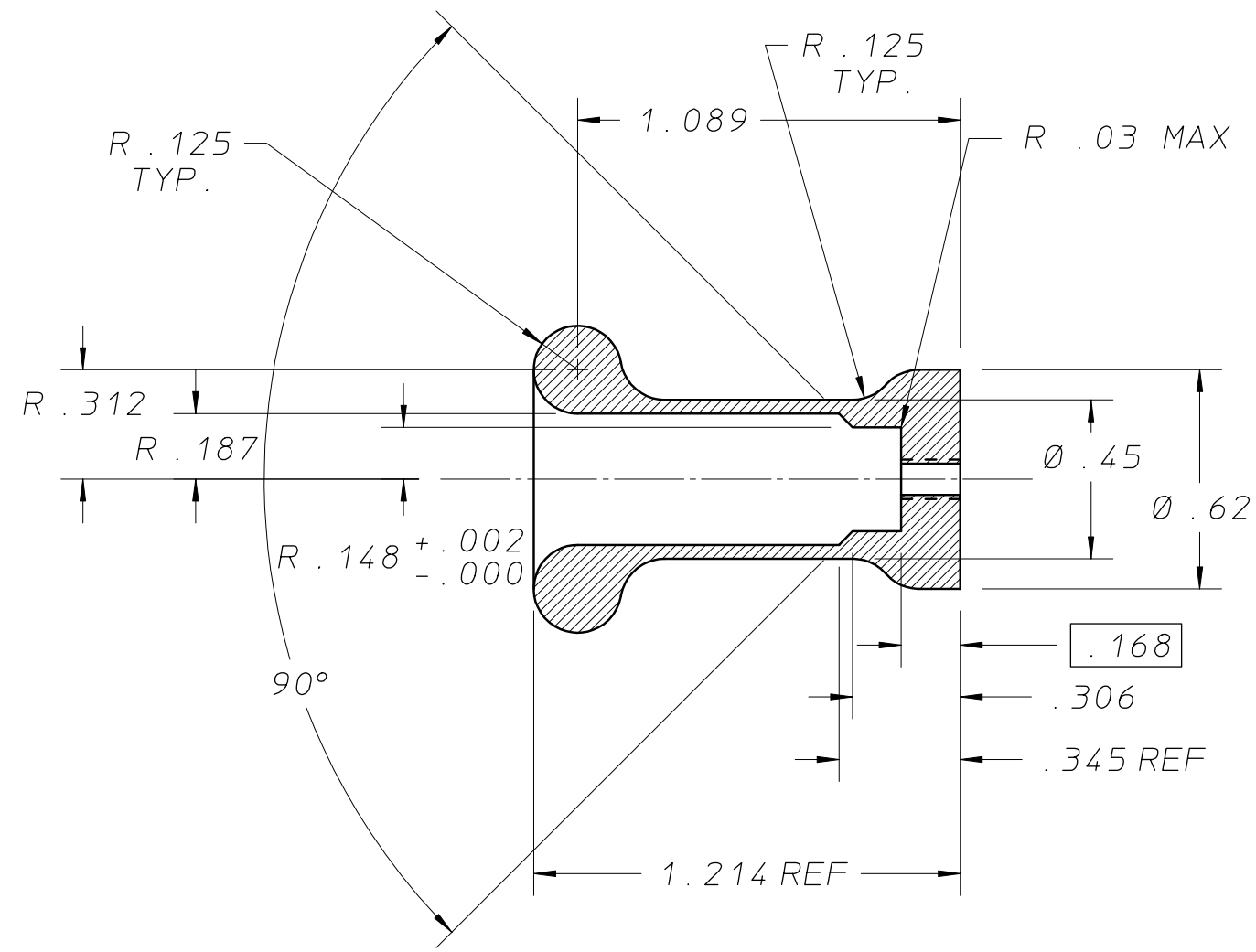

REV	DWN	CHK	DATE	DESCRIPTION

UNLESS OTHERWISE SPECIFIED
TOLERANCE .X ±.1 .XX ± .01 .XXX ±.005
SURFACE FINISH 32 √

1. SAWED, FLAMECUT, SHEARED OR CUT STOCK FINISH.
2. THREADS CLASS 2.
3. CHAMFER ENDS OF ALL SCREW THRDS 30°.
4. 1 1/2 PITCH RELIEF WITH ROUND NOSE TOOL ON ALL MACHINE CUT THRDS.
5. BREAK EDGES 1/64 MAX. ON MACHINE WORK.
6. REMOVE BURRS, LOOSE SCALE AND WELD SPLATTER.
7. REF.-USASI OR ASA STDS SECT Y-14 & B46-1.

SHOP ORDERS

ACCT NO	SER NO	
DATE ISSD	DATE REQD	NO REQD
DELIVER TO		
SURFACE TREATMENT	ELECTROPOLISH	
IDENTIFIC METHOD	TAG	
DWG BY	D. CHENG	DATE 5-16-99
CHK BY		DATE

LAWRENCE BERKELEY LABORATORY
UNIVERSITY OF CALIFORNIA-BERKELEY

SNS-FES ION SOURCE AND LEBT
MECHANICAL SYSTEMS
G3 INSULATOR SHIELD, INNER

PAT CLEAR	DWG TYPE	SHOWN ON	SCALE: 2:1
	DETAIL	21G7272	DO NOT SCALE PRINTS
MICROFILMED	DESIGN ACCT NO	CATEGORY CODE	DWG NO 21G7212 REV
	8210-14	FE3111	