21C9912A	REQD	ITEM	PART NUMBER	DESCRIPTION
	A/R			ALUMINA, AL203, 99% PURE

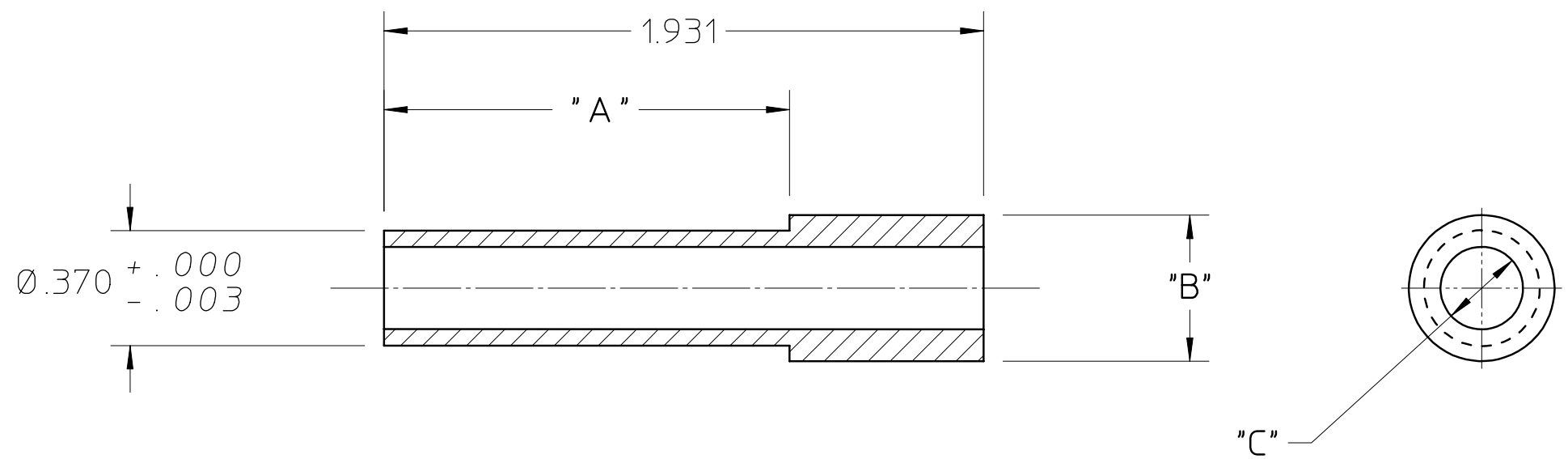

PART NUMBER	DIMENSION		
	"A"	"B"	"C"
21C9912-1	1.306	Ø.470	Ø.266
21C9912-2	.681	Ø.390	Ø.220
21C9912-3	1.610	Ø.390	Ø.220

REV	DWN	CHK	DATE	DESCRIPTION
A	DWC		8/7/01	CREATED TABULATED DIMESIONS TABLE

UNLESS OTHERWISE SPECIFIED

TOLERANCE .X ±.1 .XX ± .01 .XXX ±.005

SURFACE FINISH 125 √

1. SAWED, FLAMECUT, SHEARED OR CUT STOCK FINISH.
2. THREADS CLASS 2.
3. CHAMFER ENDS OF ALL SCREW THRDS 30°.
4. 1 1/2 PITCH RELIEF WITH ROUND NOSE TOOL ON ALL MACHINE CUT THRDS.
5. BREAK EDGES 1/64 MAX. ON MACHINE WORK.
6. REMOVE BURRS, LOOSE SCALE AND WELD SPLATTER.
7. REF.-USASI OR ASA STDS SECT Y-14 & B46-1.

SHOP ORDERS

ACCT NO | SER NO

DATE ISSD | DATE REQD | NO REQD

DELIVER TO

SURFACE TREATMENT DEGREASE

IDENTIFIC METHOD TAG

DWG BY S. MUKHERJEE | DATE 02-05-99

CHK BY D. CHENG | DATE 2/15/99

LAWRENCE BERKELEY LABORATORY
UNIVERSITY OF CALIFORNIA-BERKELEY

SNS- FRONT END SYSTEM

ION SOURCE PROTOTYPE DESIGN

CERAMIC INSULATOR FOR VACUUM FEED THRU

PAT CLEAR	DWG TYPE	SHOWN ON	SCALE: 2:1
	DETAIL	21C8406	DO NOT SCALE PRINTS
MICROFILMED	DESIGN ACCT NO	CATEGORY CODE	DWG NO / REV
	8210-14	FE1100	21C9912A