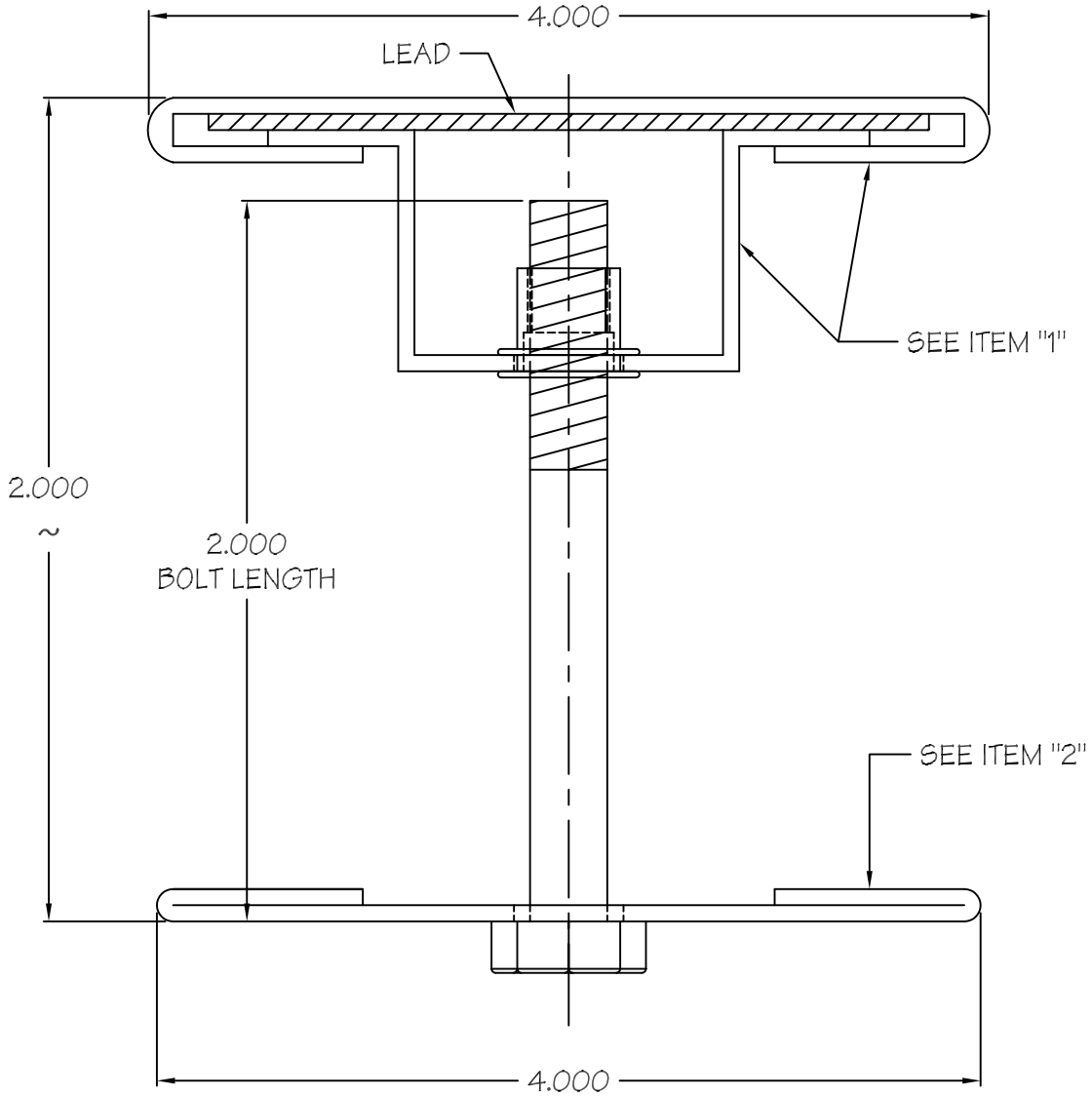

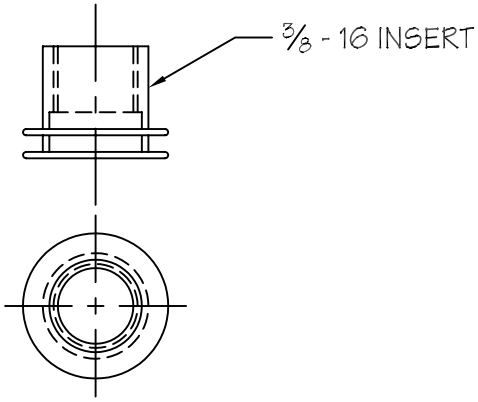

ITEM	QTY	LENGTH
1G	18	118"
1H	2	38"
1J	1	128"
1K	1	129"
1L	1	130"
1M	1	131"
1N	1	97"
1P	1	25"
1Q	2	123"

2 - PIECE REMOVABLE
H-CHANNEL ASSEMBLY w/
LEAD LINING

DATE: 10/28/02
CUSTOMER: U. C. LAWRENCE BERKELEY
P. O. #: 6700815
ENG. : MIG
FILE : 2002-9751

THIS SKETCH IS THE PROPERTY OF INDUSTRIAL NOISE CONTROL, INC. AND CONTAINS CONFIDENTIAL, PROPRIETARY INFORMATION. IT IS SUBJECT TO ALL COPYRIGHT LAWS AND SHALL NOT BE COPIED, USED OR DISCLOSED WITHOUT WRITTEN INC AUTHORIZATION.