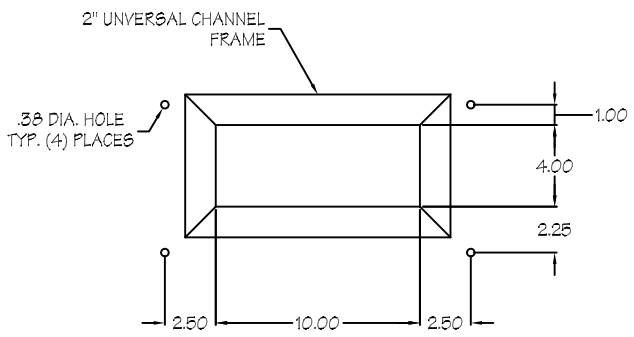

1/3 DETAIL

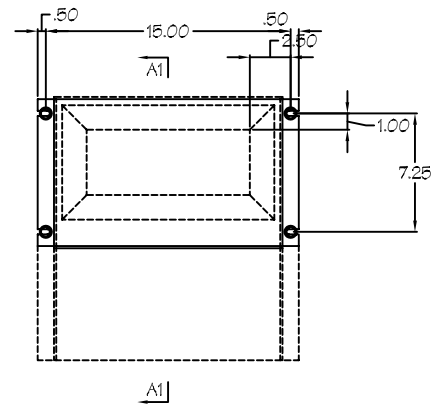

2/4 DETAIL

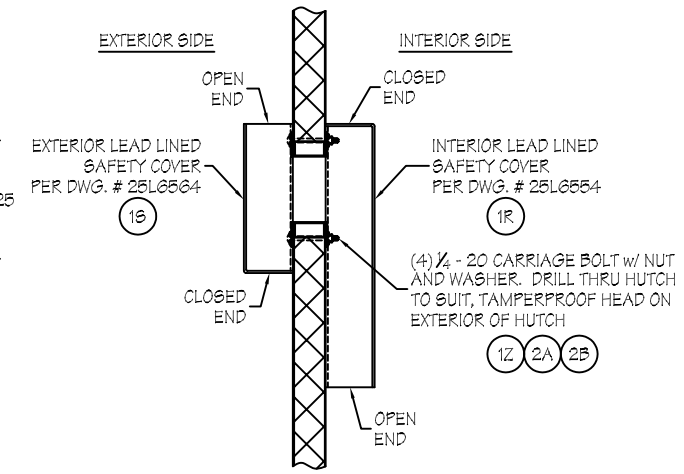

A1/4 SECTION

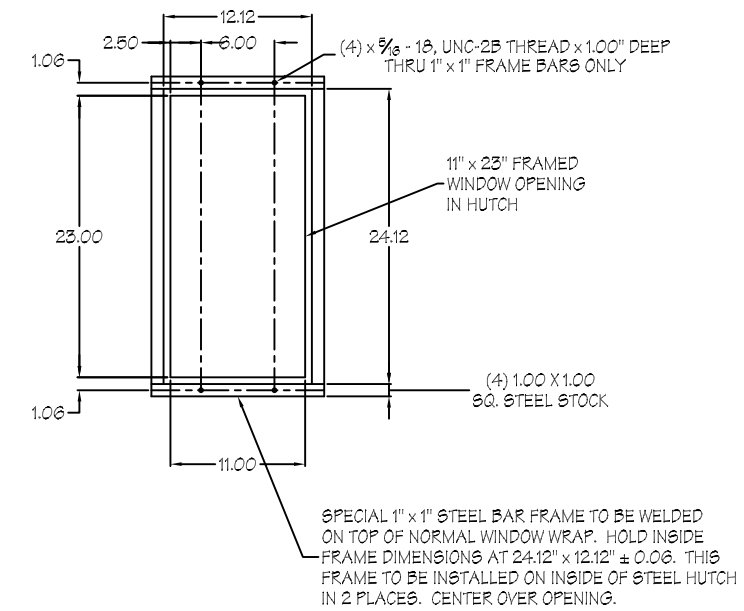

3/3 DETAIL

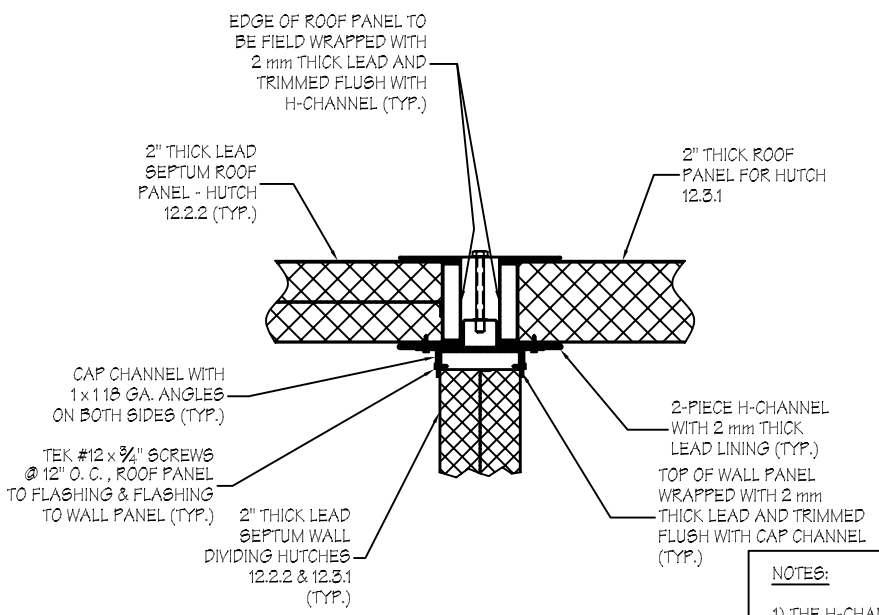

NOTES:

1) THE H-CHANNEL FOR THIS CONNECTION TO HAVE HARDWARE ON THE EXTERIOR OF ENCLOSURE. ALL HARDWARE FOR THIS H-CHANNEL TO BE TAMPER RESISTANT.

2) THE CAP CHANNEL TO BE ATTACHED WITH TAMPER RESISTANT SELF TAPPING HARDWARE.

4/3 DETAIL

REV. NO.	DATE	DESCRIPTION
1	11/04/02	ISSUED FOR INSTALLATION
0	10/03/02	ISSUED FOR COMMENTS

specialists in noise control products
industrial noise control, inc.
401 Airport Rd.- North Aurora, IL 60542 - 800/954-1998

CUSTOMER :
U. C. LAWRENCE BERKELEY LABORATORY
1 CYCLOTRON RD.
BERKELEY, CA 94720

PROJECT :
INC'S 2" PANL-WALL LEAD LINED RADIATION SHEILDING HUTCH 12.2.2

DWG. TITLE : INSTALLATION DRAWING - DETAIL AND SECTION VIEWS

PO # : 6700815 | DRN. BY : MIG | JOB : 2002-9751

SCALE : NONE | SHT. : 1.4 OF 4

THIS DRAWING IS THE PROPERTY OF INDUSTRIAL NOISE CONTROL, INC AND CONTAINS CONFIDENTIAL, PROPRIETARY INFORMATION. IT IS SUBJECT TO ALL COPYRIGHT LAWS AND SHALL NOT BE COPIED, USED OR DISCLOSED WITHOUT WRITTEN INC AUTHORIZATION.