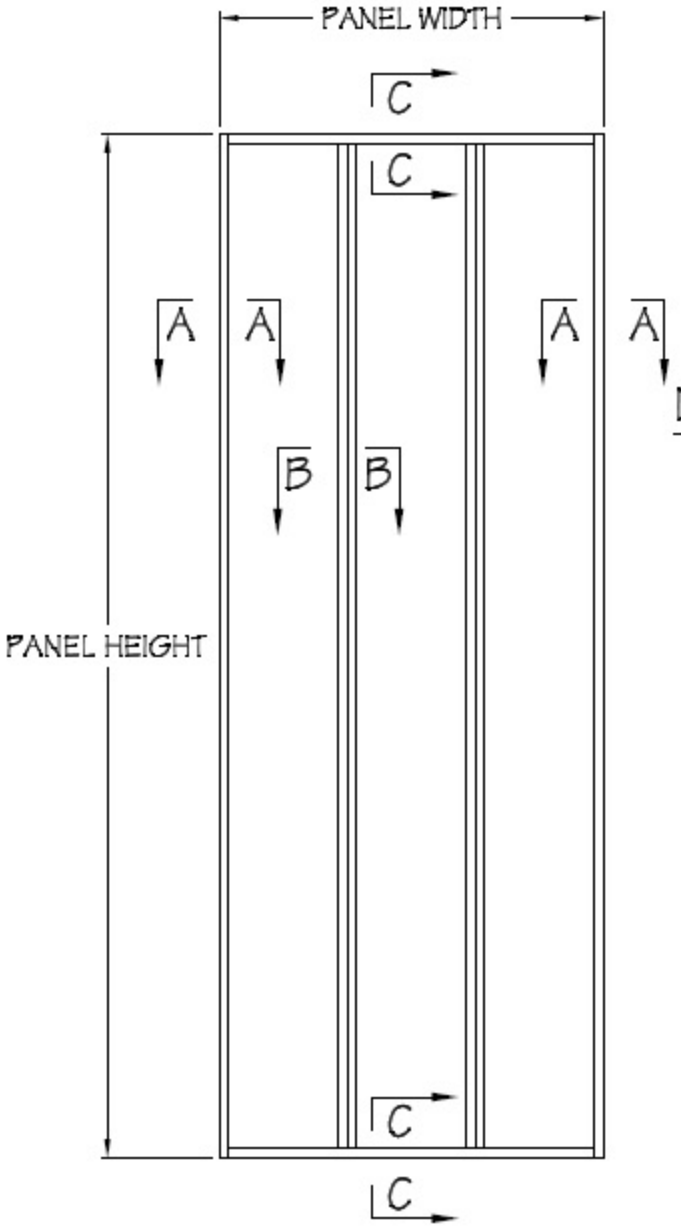

LEAD LINING DETAIL #3

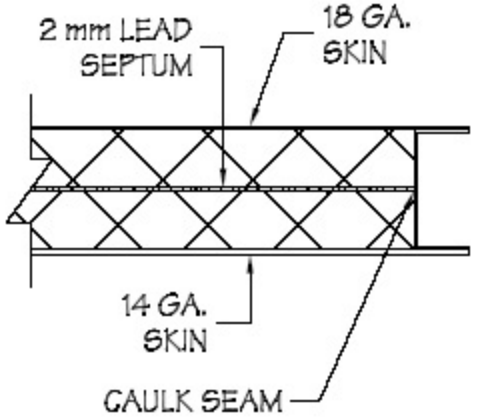

DETAIL "C" - PANEL WIDTH

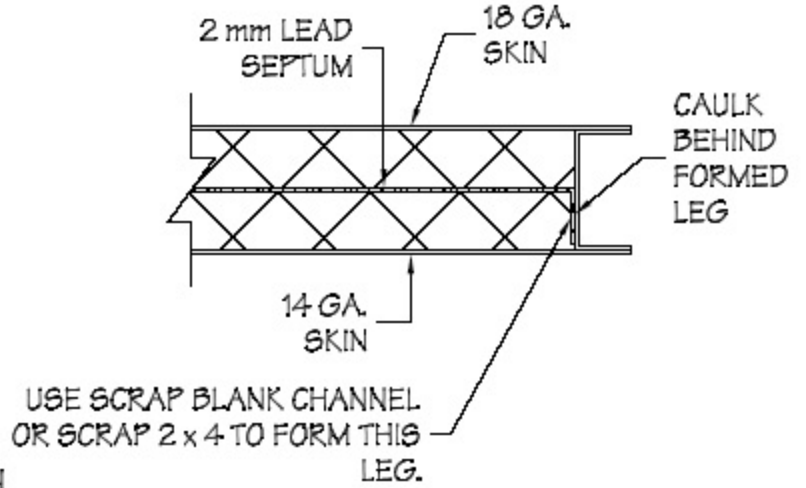

DETAIL "A" - PANEL LENGTH

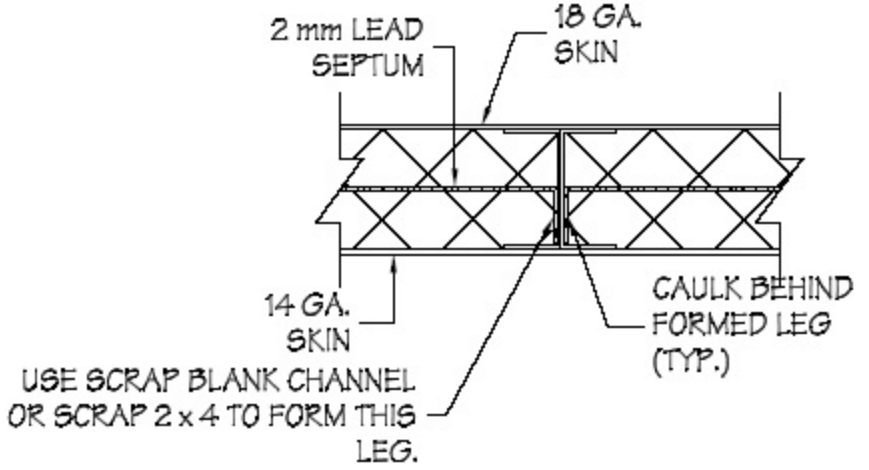

DETAIL "B" - BACK TO BACK BLANK CHANNEL

THIS SKETCH IS THE PROPERTY OF INDUSTRIAL NOISE CONTROL, INC. AND CONTAINS CONFIDENTIAL, PROPRIETARY INFORMATION. IT IS SUBJECT TO ALL COPYRIGHT LAWS AND SHALL NOT BE COPIED, USED OR DISCLOSED WITHOUT WRITTEN INC AUTHORIZATION.

DATE: 10/28/02
CUSTOMER: U. C. LAWRENCE BERKELEY
P. O. #: 6700815
ENG. : MIG
FILE : 2002-9751