Beamline 6.0 Chopper

Specifications:

Source power attenuation:	98%
Source power:	440 Watts
Pulse rate (frequency) :	40,000 Hz
Beam width (Gaussian-FWHM):	750 micrometers
Beam height (Gaussian-FWHM):	105 micrometers
Disc slot height:	200 micrometers
Disc slot width:	2.5~3mm
Operating pressure:	1×10^{-6} Torr
Seal operating life:	1-2 years
Bearing life:	> Seal life

Proposed Design Details

Disc Material:	Aluminum 2014-T6 or T651
Outside Diameter:	8.4 inches
Thickness:	1.0 inches
Bore Diameter:	0.59 inches (15mm)
Slot number:	100
Slot spacing:	3.6 degrees
Slot size:	200 micrometers height x 3mm width
Rotation speed:	24,000 RPM (400 Hz)
Seal:	Rigaku Magnetic Rotary seal
Bearings:	Ceramic ball

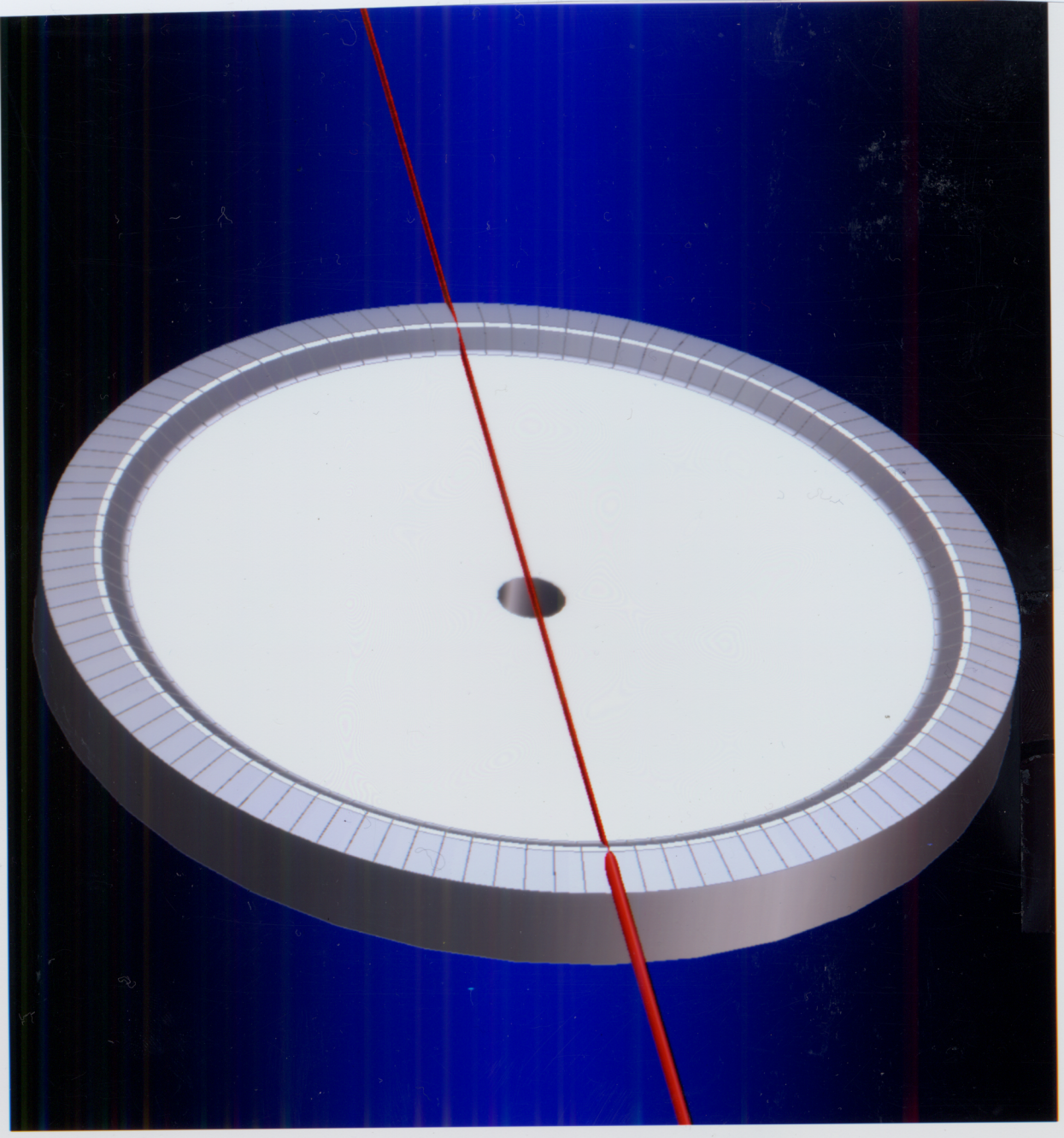

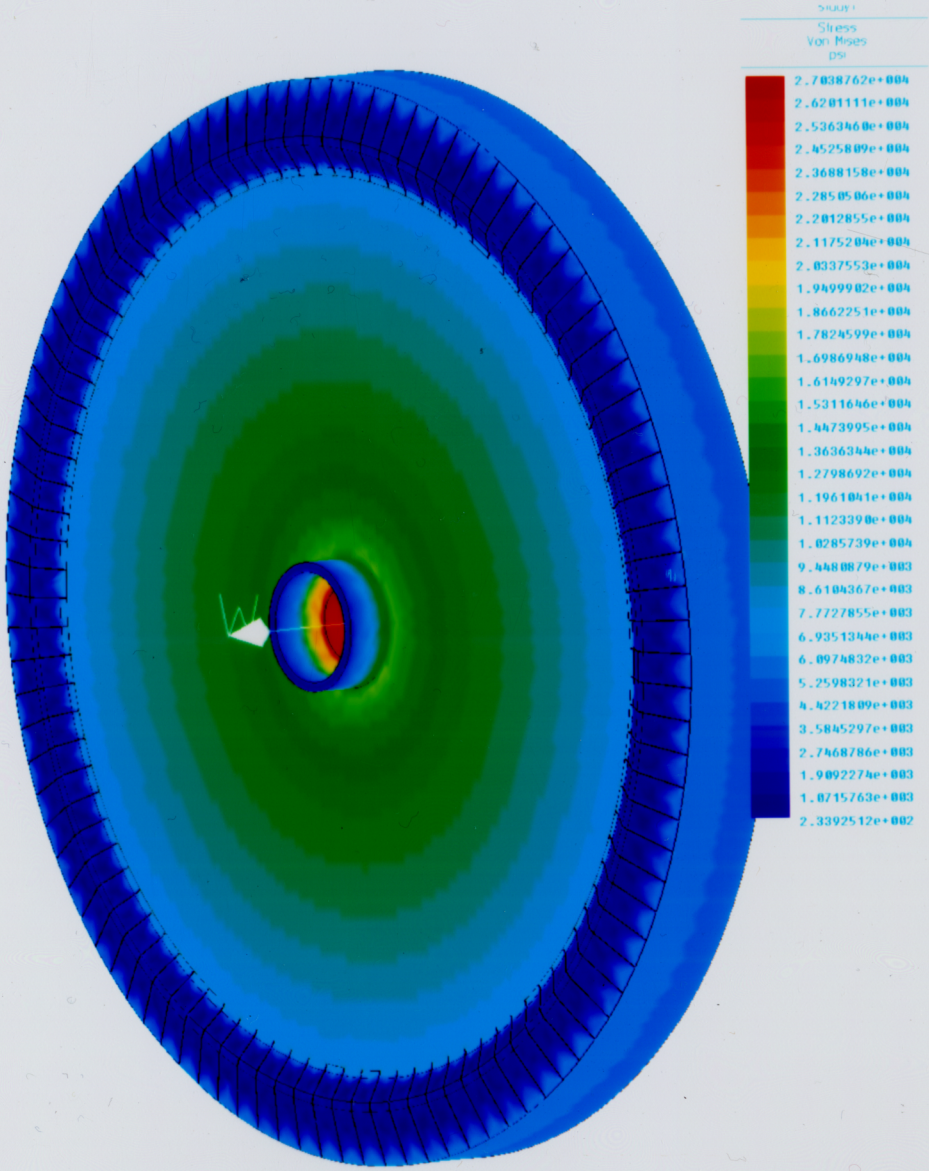
Stress
Von Mises
psi
2.7038762e+004
2.6201111e+004
2.5363460e+004
2.4525809e+004
2.3688158e+004
2.2850506e+004
2.2012855e+004
2.1175204e+004
2.0337553e+004
1.9499902e+004
1.8662251e+004
1.7824599e+004
1.6986948e+004
1.6149297e+004
1.5311646e+004
1.4473995e+004
1.3636344e+004
1.2798692e+004
1.1961041e+004
1.1123390e+004
1.0285739e+004
9.4480879e+003
8.6104367e+003
7.7727855e+003
6.9351344e+003
6.0974832e+003
5.2598321e+003
4.4221809e+003
3.5845297e+003
2.7468786e+003
1.9092274e+003
1.0715763e+003
2.3392512e+002

Rigaku High power X-ray generator
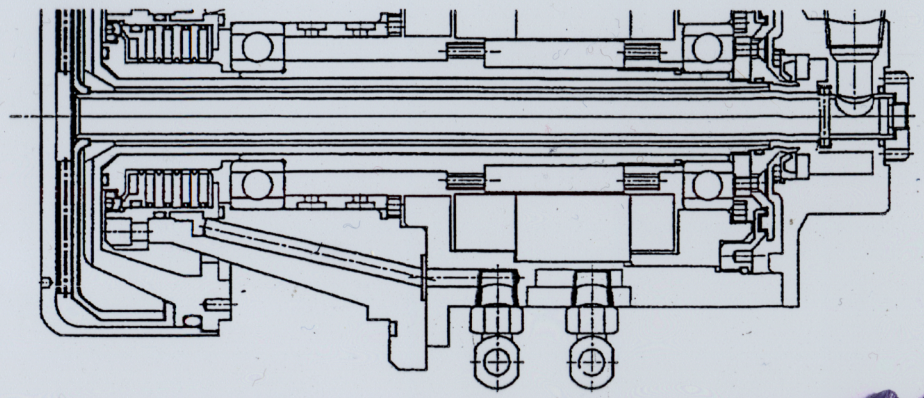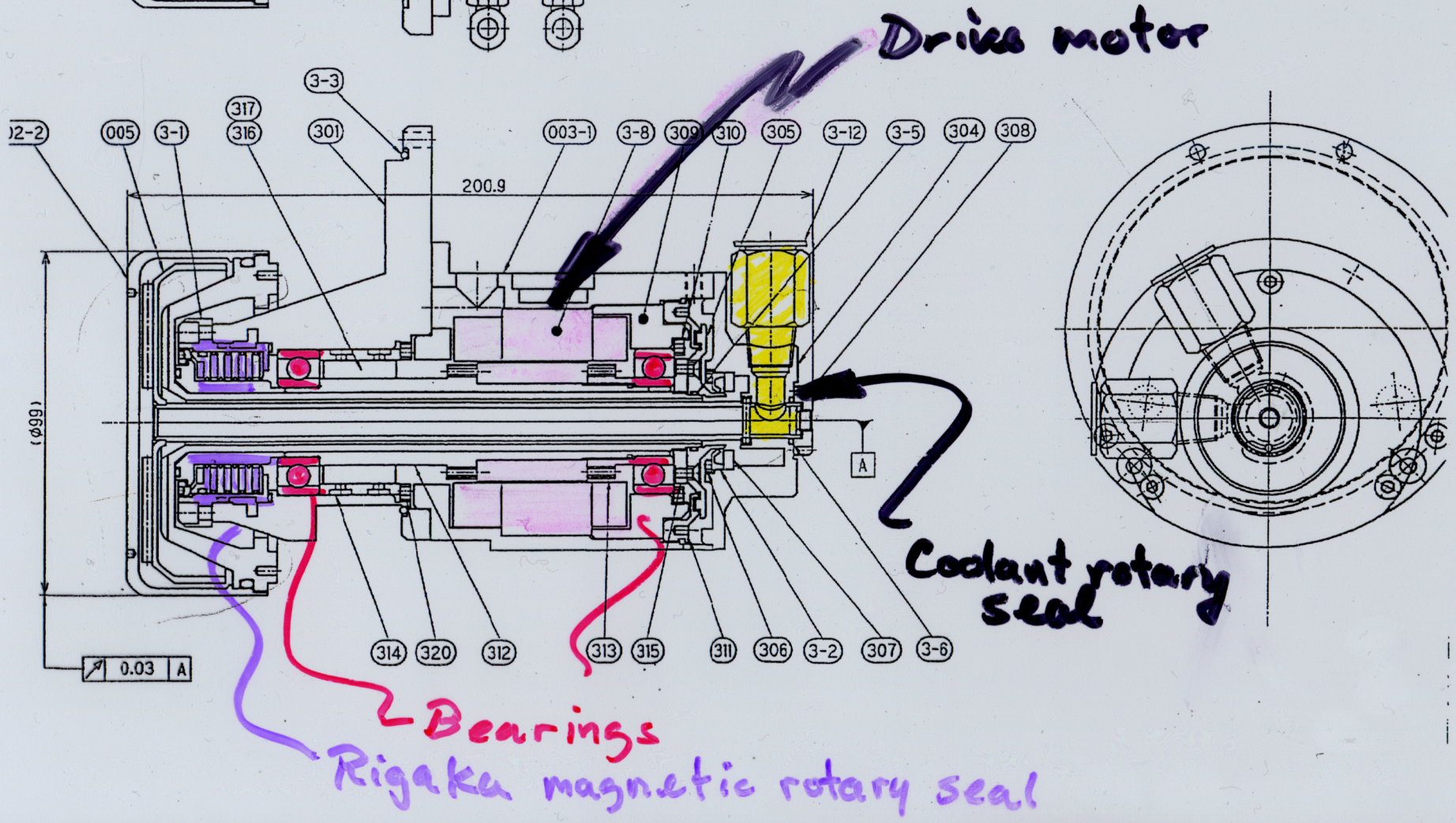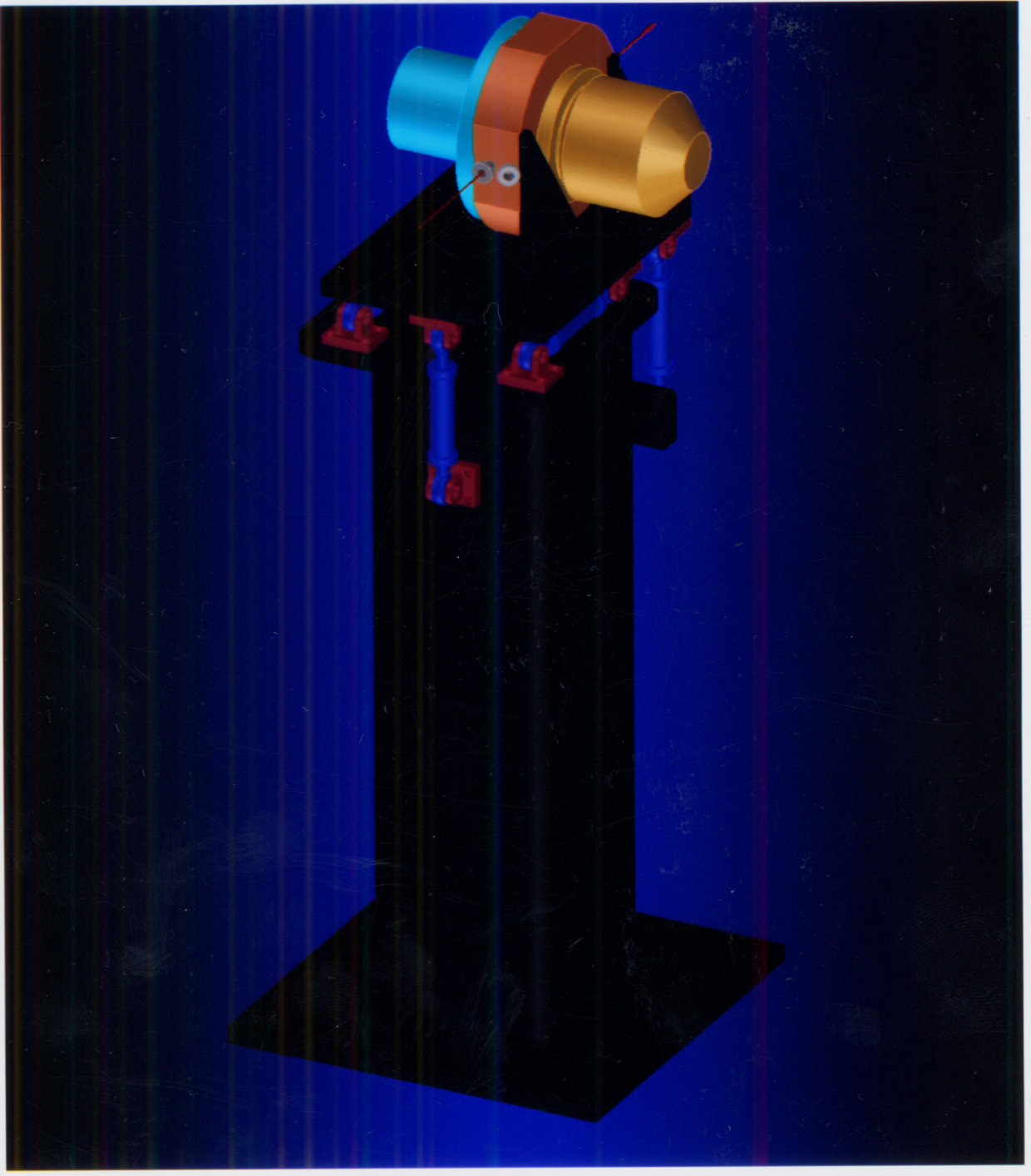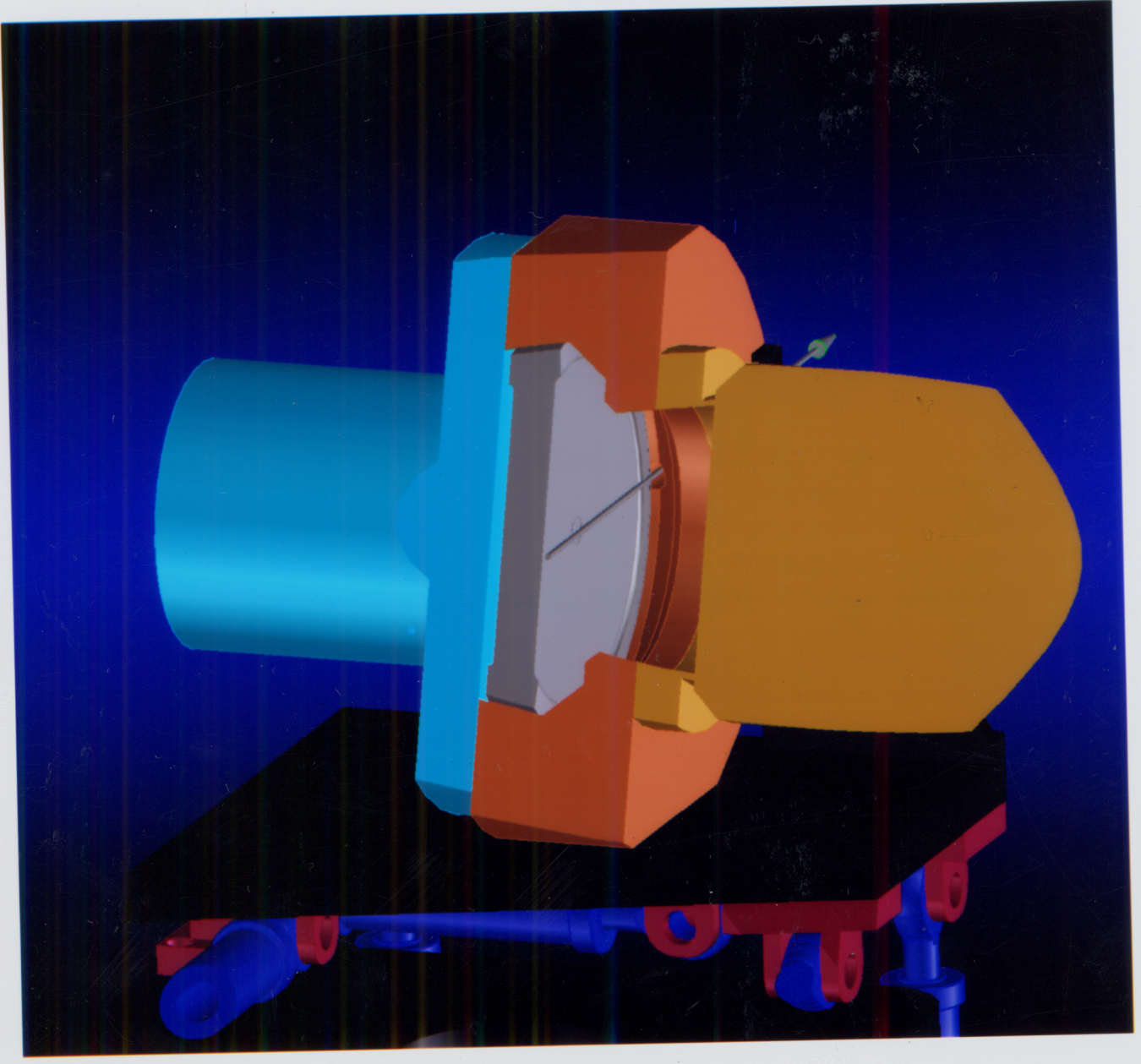
- 18 KW power
- 10^{-7} Torr
- 6000 RPM