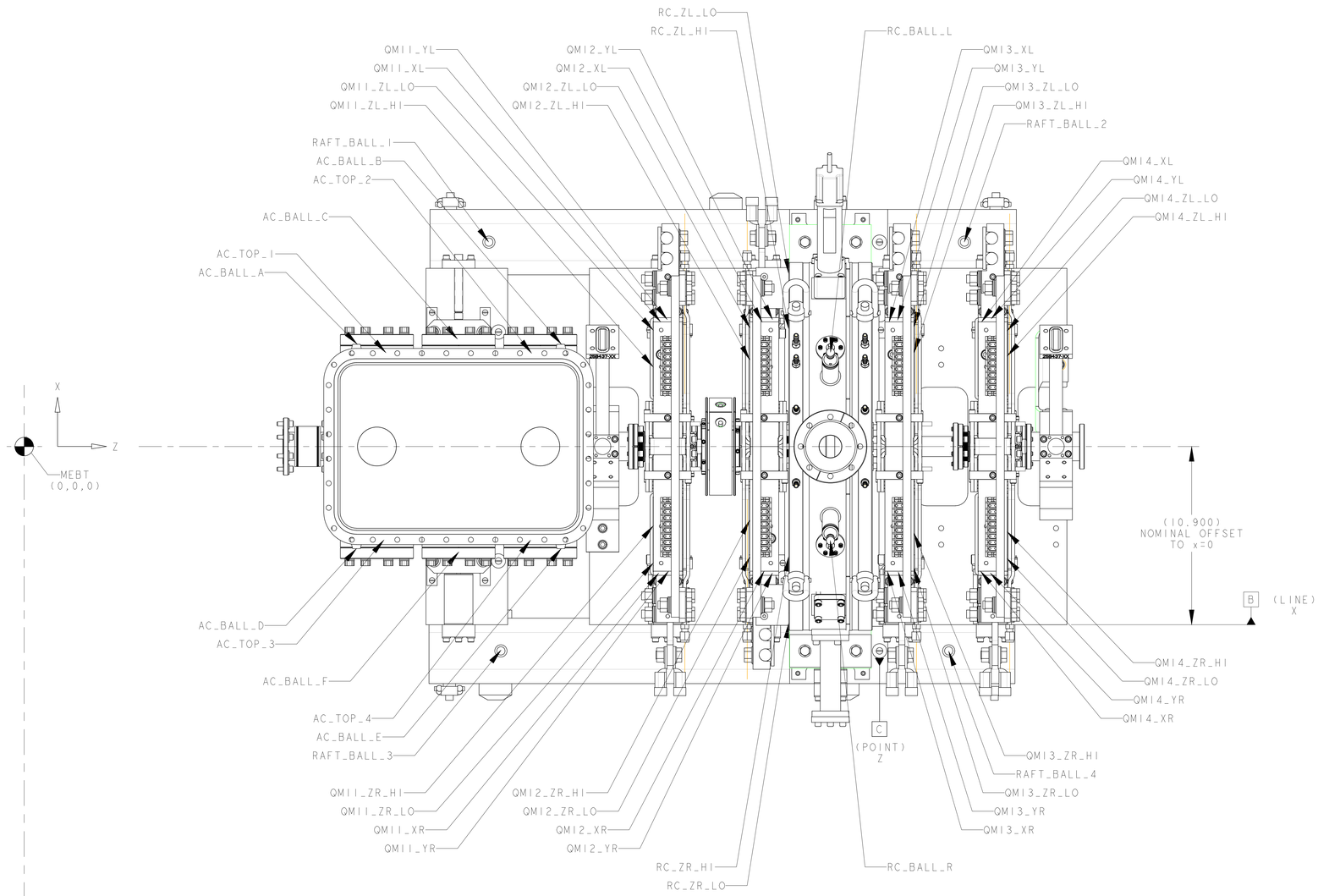

MEBT RAFT 3
CMM MEASUREMENT RESULTS

(ALL VALUES ARE IN INCHES)

LOCATION	MEASURED x	MEASURED y	MEASURED z	NOMINAL	DEVIATION	DESCRIPTION
QMI1_XL	7.6260	—	—	7.6270	-0.0010	PLANE
QMI1_YL	—	3.6833	—	3.6830	0.0003	PLANE
QMI1_YR	—	3.6831	—	3.6830	0.0001	PLANE
QMI1_XR	-7.6271	—	—	-7.6270	-0.0001	PLANE
QMI1_ZR_HI	—	—	113.6857	113.6810	0.0047	POINT
QMI1_ZR_LO	—	—	113.6851	113.6810	0.0041	POINT
QMI1_ZL_HI	—	—	113.6847	113.6810	0.0037	POINT
QMI1_ZL_LO	—	—	113.6872	113.6810	0.0062	POINT
QMI2_XL	7.6264	—	—	7.6270	-0.0006	PLANE
QMI2_YL	—	3.6833	—	3.6830	0.0003	PLANE
QMI2_YR	—	3.6829	—	3.6830	-0.0001	PLANE
QMI2_XR	-7.6269	—	—	7.6270	0.0001	PLANE
QMI2_ZR_HI	—	—	119.5915	119.5860	0.0055	POINT
QMI2_ZR_LO	—	—	119.5924	119.5860	0.0064	POINT
QMI2_ZL_HI	—	—	119.5978	119.5860	0.0118	POINT
QMI2_ZL_LO	—	—	119.5935	119.5860	0.0075	POINT
QMI3_XL	7.6268	—	—	7.6270	-0.0002	PLANE
QMI3_YL	—	3.6838	—	3.6830	0.0008	PLANE
QMI3_YR	—	3.6831	—	3.6830	0.0001	PLANE
QMI3_XR	-7.6268	—	—	-7.6270	0.0002	PLANE
QMI3_ZR_HI	—	—	129.6220	129.6260	-0.0040	POINT
QMI3_ZR_LO	—	—	129.6220	129.6260	-0.0040	POINT
QMI3_ZL_HI	—	—	129.6235	129.6260	-0.0025	POINT
QMI3_ZL_LO	—	—	129.6237	129.6260	-0.0023	POINT
QMI4_XL	7.6264	—	—	7.6270	-0.0006	PLANE
QMI4_YL	—	3.6834	—	3.6830	0.0004	PLANE
QMI4_YR	—	3.6816	—	3.6830	-0.0014	PLANE
QMI4_XR	-7.6271	—	—	-7.6270	-0.0001	PLANE
QMI4_ZR_HI	—	—	135.3350	135.3350	0.0000	POINT
QMI4_ZR_LO	—	—	135.3311	135.3350	-0.0039	POINT
QMI4_ZL_HI	—	—	135.3298	135.3350	-0.0052	POINT
QMI4_ZL_LO	—	—	135.3323	135.3350	-0.0027	POINT
AC_BALL_A	6.7215	4.1021	95.5249	—	—	SPHERICITY
AC_BALL_B	6.7192	4.0889	108.0218	—	—	SPHERICITY
AC_BALL_C	6.7143	-3.0474	101.7698	—	—	SPHERICITY
AC_BALL_D	-6.7341	4.0938	95.5260	—	—	SPHERICITY
AC_BALL_E	-6.7350	4.0801	108.0225	—	—	SPHERICITY
AC_BALL_F	-6.7240	-3.0489	101.7658	—	—	SPHERICITY
RAFT_BALL_1	12.5210	-6.5400	103.6190	—	—	SPHERICITY
RAFT_BALL_2	12.4838	-6.5727	132.7172	—	—	SPHERICITY
RAFT_BALL_3	-12.4992	-6.5550	104.3336	—	—	SPHERICITY
RAFT_BALL_4	-12.5460	-6.5613	131.7364	—	—	SPHERICITY
RC_BALL_R (Rebuncher #4)	-5.7608	13.9155	124.5622	—	—	SPHERICITY
RC_BALL_L (Rebuncher #4)	5.7686	13.9049	124.5503	—	—	SPHERICITY
RC_ZL_HI	—	—	121.9538	121.9690	-0.0152	POINT
RC_ZL_LO	—	—	121.9689	121.9690	-0.0001	POINT
RC_ZR_HI	—	—	121.9495	121.9690	-0.0195	POINT
RC_ZR_LO	—	—	121.9609	121.9690	-0.0081	POINT
AC_TOP_1	—	5.7204	—	5.7000	0.0204	POINT
AC_TOP_2	—	5.7151	—	5.7000	0.0151	POINT
AC_TOP_3	—	5.7156	—	5.7000	0.0156	POINT
AC_TOP_4	—	5.7093	—	5.7000	0.0093	POINT

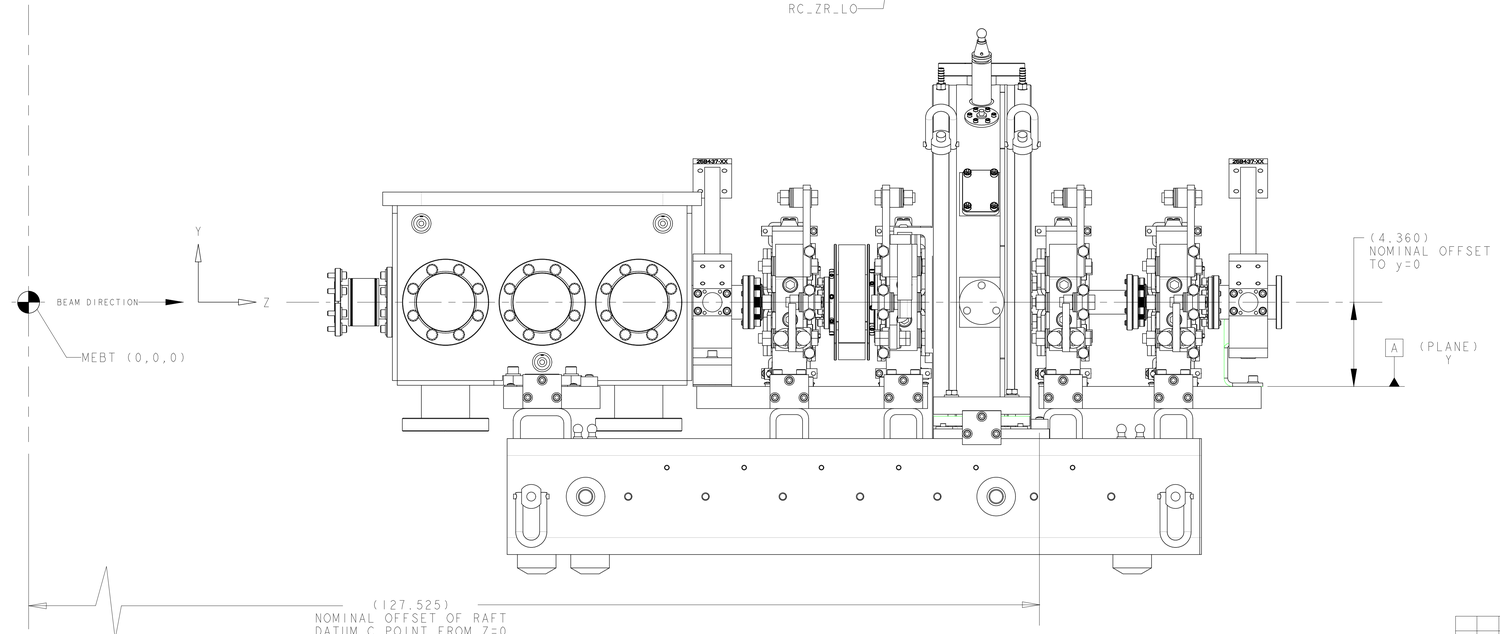

NOTE:

1. THIS DRAWING ILLUSTRATES THE LOCATIONS FROM WHICH FIDUCIAL DATA WAS TAKEN.
2. THE ANTI-CHOPPER COVER IS REMOVED DURING MEASUREMENTS.

REV	DWG	CHK	ZONE	DATE	CHANGES
A	AD			3/02	INITIAL RELEASE

UNLESS OTHERWISE SPECIFIED
PROJECTION:
TOLERANCES: X.X ± 0.1 FRAC. ± 1/64; X.XX ± 0.03 Angles ± 1.0°; X.XXX ± 0.010 FINISH 125
DO NOT SCALE PRINT
THREADS ARE CLASS 2
CHAMFER ENDS OF ALL SCREW THEADS 30°
CUT ROUND, 1.5 THREAD RELIEF ON MACHINED THREADS
BREAK EDGES .016 MAX. ON MACHINED WORK
REMOVE BURRS, WELD SPLATTER & LOOSE SCALE
IN ACCORDANCE WITH ASME Y14.5M & B46.1

SHOP ORDERS
ACCT NO. / NO. REQD / DATE ISSD
BEL ID / DATE REQD
SURFACE TREATMT
IDENT METHOD: TAG
PROJECT NUMBER: na
PROJECT NAME: N/A
DWG BY: DATE 11-Oct-01
CHK BY: DATE
APR BY: DATE
SER NO.

ERNEST ORLANDO LAWRENCE BERKELEY NATIONAL LABORATORY
UNIVERSITY OF CALIFORNIA - BERKELEY

SNS - FES MEBT
MECHANICAL SUB-ASSEMBLY
MEBT RAFT 3 ASSEMBLY

MICROFILMED: | DWG. TYPE: ASSEM | SHOWN ON: 25B603 | SCALE: 33/100 | DO NOT SCALE PRINTS
PATENT CLEAR: | DESIGN ACCT. NO.: - | CATEGORY CODE: FE3313 | DWG. NO.: 25B6126 | SIZE: A | REV.:

SHEET 4 OF 4

DWG. NO. 25B6126 | A 4