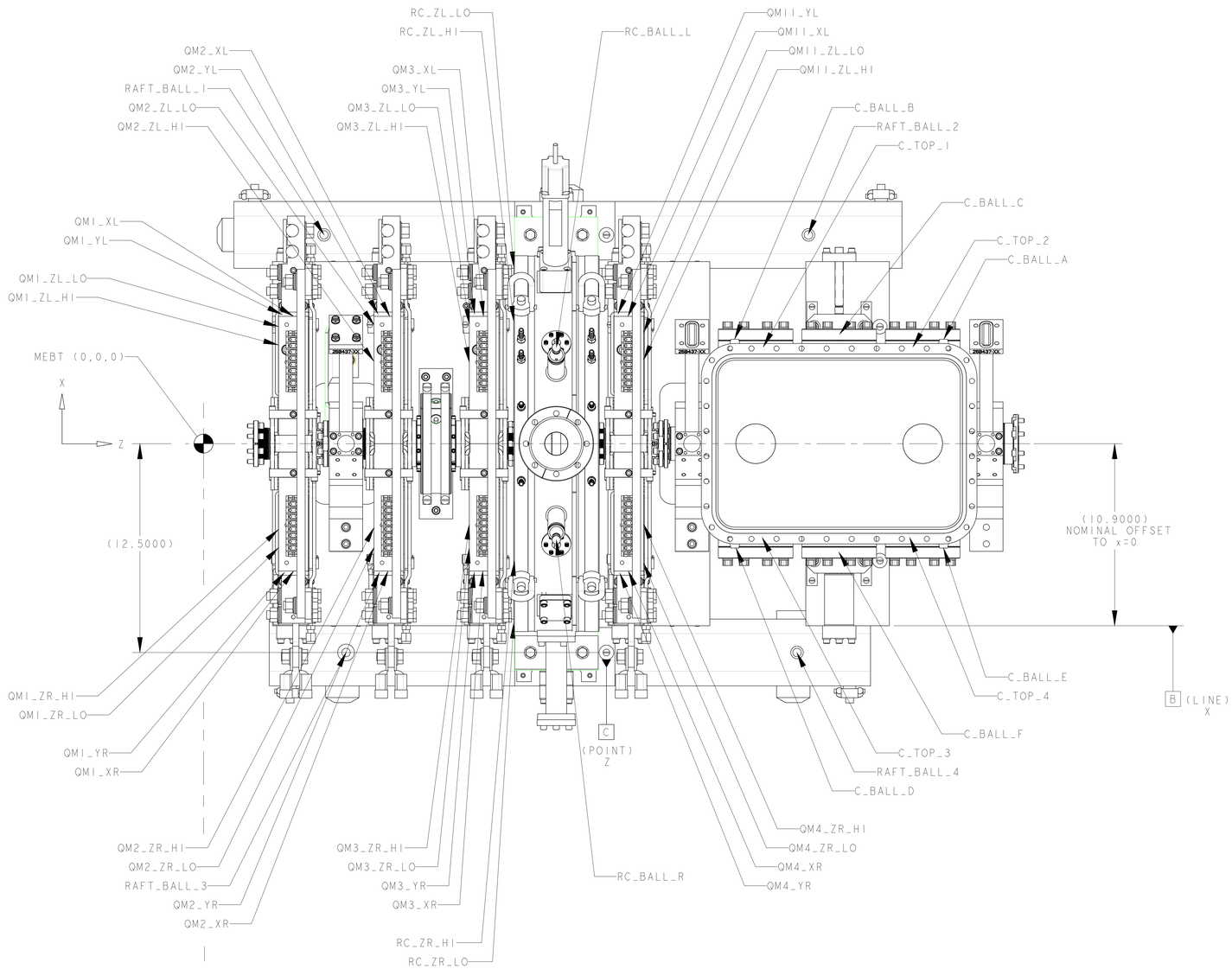

MEBT RAFT 1
CMM MEASUREMENT RESULTS

(ALL VALUES ARE IN INCHES)

LOCATION	MEASURED x	MEASURED y	MEASURED z	NOMINAL	DEVIATION	DESCRIPTION
QM1_XL	7.6262	—	—	7.6270	-0.0008	PLANE
QM1_YL	—	3.6829	—	3.6830	-0.0001	PLANE
QM1_YR	—	3.6827	—	3.6830	-0.0003	PLANE
QM1_XR	-7.6268	—	—	7.6270	0.0002	PLANE
QM1_ZR_HI	—	—	4.4362	4.4290	0.0072	POINT
QM1_ZR_LO	—	—	4.4343	4.4290	0.0053	POINT
QM1_ZL_HI	—	—	4.4337	4.4290	0.0047	POINT
QM1_ZL_LO	—	—	4.4343	4.4290	0.0053	POINT
QM2_XL	7.6255	—	—	7.6270	-0.0015	PLANE
QM2_YL	—	3.6833	—	3.6830	0.0003	PLANE
QM2_YR	—	3.6828	—	3.6830	-0.0002	PLANE
QM2_XR	-7.6275	—	—	7.6270	-0.0005	PLANE
QM2_ZR_HI	—	—	10.1439	10.1380	0.0059	POINT
QM2_ZR_LO	—	—	10.1437	10.1380	0.0057	POINT
QM2_ZL_HI	—	—	10.1414	10.1380	0.0034	POINT
QM2_ZL_LO	—	—	10.1436	10.1380	0.0056	POINT
QM3_XL	7.6263	—	—	7.6270	-0.0007	PLANE
QM3_YL	—	3.6831	—	3.6830	0.0001	PLANE
QM3_YR	—	3.6829	—	3.6830	-0.0001	PLANE
QM3_XR	-7.6269	—	—	7.6270	0.0001	PLANE
QM3_ZR_HI	—	—	15.8527	15.8460	0.0067	POINT
QM3_ZR_LO	—	—	15.8516	15.8460	0.0056	POINT
QM3_ZL_HI	—	—	15.8520	15.8460	0.0060	POINT
QM3_ZL_LO	—	—	15.8521	15.8460	0.0061	POINT
QM4_XL	7.6264	—	—	7.6270	-0.0006	PLANE
QM4_YL	—	3.6833	—	3.6830	0.0003	PLANE
QM4_YR	—	3.6826	—	3.6830	-0.0004	PLANE
QM4_XR	-7.6269	—	—	7.6270	0.0001	PLANE
QM4_ZR_HI	—	—	26.2757	26.2800	-0.0043	POINT
QM4_ZR_LO	—	—	26.2748	26.2800	-0.0052	POINT
QM4_ZL_HI	—	—	26.2762	26.2800	-0.0038	POINT
QM4_ZL_LO	—	—	26.2751	26.2800	-0.0049	POINT
C_BALL_A	6.7220	4.0888	44.2297	—	—	SPHERICITY
C_BALL_B	6.7159	4.0855	31.7439	—	—	SPHERICITY
C_BALL_C	6.7124	-3.0598	37.9862	—	—	SPHERICITY
C_BALL_D	-6.7305	4.0864	31.7533	—	—	SPHERICITY
C_BALL_E	-6.7255	4.0890	44.2438	—	—	SPHERICITY
C_BALL_F	-6.7198	-3.0634	37.9968	—	—	SPHERICITY
RAFT_BALL_1	12.5167	-6.5388	7.1843	—	—	SPHERICITY
RAFT_BALL_2	12.4967	-6.5652	36.1791	—	—	SPHERICITY
RAFT_BALL_3	-12.4878	-6.5454	8.4833	—	—	SPHERICITY
RAFT_BALL_4	-12.5078	-6.5593	35.4754	—	—	SPHERICITY
RC_BALL_R (Rebuncher #1)	-5.7483	13.9145	21.0443	—	—	SPHERICITY
RC_BALL_L (Rebuncher #1)	5.7730	13.9028	21.0288	—	—	SPHERICITY
RC_ZL_HI	—	—	18.4865	18.5035	-0.0170	POINT
RC_ZL_LO	—	—	18.4963	18.5035	-0.0072	POINT
RC_ZR_HI	—	—	18.4914	18.5035	-0.0121	POINT
RC_ZR_LO	—	—	18.5073	18.5035	0.0038	POINT
C_TOP_1	—	—	5.7134	5.7000	0.0134	POINT
C_TOP_2	—	—	5.7138	5.7000	0.0138	POINT
C_TOP_3	—	—	5.7114	5.7000	0.0114	POINT
C_TOP_4	—	—	5.7112	5.7000	0.0112	POINT

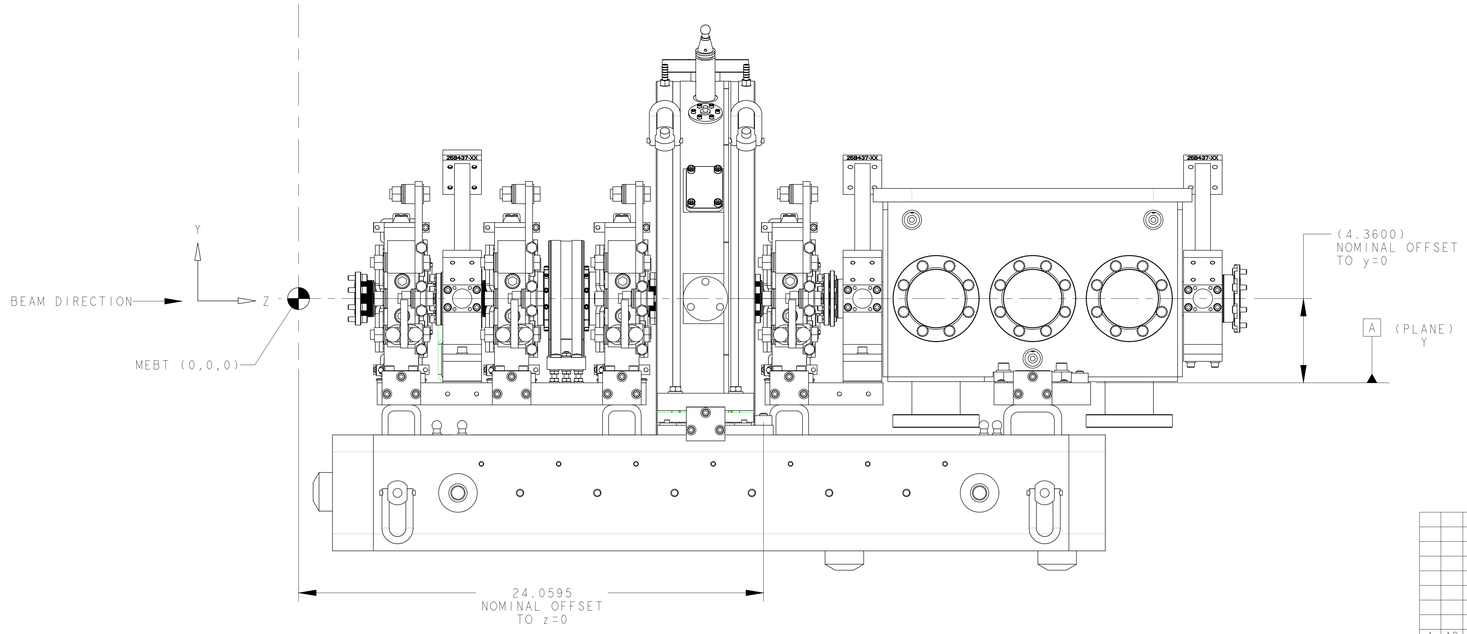

NOTE:

1. THIS DRAWING ILLUSTRATES THE LOCATIONS FROM WHICH FIDUCIAL DATA WAS TAKEN.
2. THE CHOPPER COVER IS REMOVED DURING MEASUREMENTS.

REV	DWG	CHK	ZONE	DATE	CHANGES
A	AD			3/02	INITIAL RELEASE

UNLESS OTHERWISE SPECIFIED
PROJECTION:
TOLERANCES: X.X ± 0.1 FRAC. ± 1/64; X.XX ± 0.03 Angles ± 1.0°; X.XXX ± 0.010 FINISH 125
DO NOT SCALE PRINT
THREADS ARE CLASS 2
CHAMFER ENDS OF ALL SCREW THREADS 30°
CUT ROUND, 1.5 THREAD RELIEF ON MACHINED THREADS
BREAK EDGES .016 MAX. ON MACHINED WORK
REMOVE BURRS, WELD SPLATTER & LOOSE SCALE
(IN ACCORDANCE WITH ASME Y14.5M & B46.1)

SHOP ORDERS
SER NO. -
ACCT NO. | NO. REQD | DATE ISSD -
PCL NO. | DATE REQD
SURFACE TREATMENT -
IDENT METHOD TAG
PROJECT NUMBER na
PROJECT NAME N/A
DWN BY Allan DeMello DATE 16-Oct-01
CHK BY D. Oshatz DATE
APR BY D. Oshatz DATE

ERNEST ORLANDO LAWRENCE BERKELEY NATIONAL LABORATORY
UNIVERSITY OF CALIFORNIA · BERKELEY

SNS - FES MEBT
GENERAL
MEBT RAFT 1 ASSEMBLY

MICROFILMED: | PATENT CLEAR: | DWG. TYPE ASSEM | SHOWN ON 25B603 | DESIGN ACCT. NO. - | CATEGORY CODE FE3300 | SCALE: 33/100 | DO NOT SCALE PRINTS | SHEET 4 OF 4 | DWG. NO. 25B6106 | SIZE A | REV. A

DWG. NO. 25B6106 | SHT. 4 | REV. A