Author
Allan DeMello

Department
Mechanical Engineering

Date
5/13/02

Program - Project - Job: SNS-FES MEBT
Beam Transport Systems

Title: **Chopper Target Vacuum Chamber Design Package**

1. Scope

This Engineering Note describes the mechanical design for the Chopper Target Vacuum Chamber Assembly. The Chopper Target itself is detailed in a separate SNS – FES Technote (FE-ME-031). Included are: part and assembly drawing, discussion of the mechanical design background, outside vendor component information and fiducialization data for the chamber as fabricated and miscellaneous data.

2. Drawings

25B100	Modified Actuator, EMT-2.5-2/ Block Up
25B190	Stainless Steel Forging
25B400	Chopper Target Complete Assembly
25B401	Vacuum Chamber - Initial Machining
25B402	Bottom Plate Assembly
25B403	Vacuum Chamber - Bottom Plate
25B404	Viewport, 4.5" Conflat Flange
25B405	Vacuum Chamber Weldment
25B406	Vacuum Chamber - Mounting Plate
25B407	Vacuum Chamber Lower Assembly
25B408	Vacuum Chamber - View Port Flange Weldment
25B409	Vacuum Chamber - View Port Flange
25B410	Vacuum Chamber - Target Actuator Flange Weldment
25B411	Vacuum Chamber - Target Actuator Flange
25B412	Target Feedthru Port - Conflat Flange
25B413	Water Manifold
25B414	Water Manifold Conflat Flange
25B415	Water Manifold Inlet/Outlet Tube
25B416	Right Angle Tube, 1/2" O.D. x .035 Wall
25B417	Right Angle Cooling Tube

Copies of all drawings are included in the Appendix A.

3. Design Overview

The Chopper Target Vacuum Chamber Assembly is mounted on the second (middle) MEBT raft. The chopper target is a water cooled TZM Molybdenum assembly used to intercept the ion beam after it has been deflected (chopped) in the chopper assembly on MEBT raft 1.

3.1 Alignment

The Chopper Target Vacuum Chamber Assembly is designed to house the chopper target and to orient it precisely relative to the ion beam. The chopper target is positioned, into or out of the beam, with a computer controlled motor actuator. The chopper target is also locked at a precise angle of incidence relative the ion beam of 75 degrees by a pin between the actuator and the water manifold.

3.2 Spatial Constraints

The mechanical design of the Chopper Target Vacuum Chamber Assembly was spatially constrained by the interfaces with adjacent beamline components of the MEBT (i.e. the MEBT Profile Monitor Beambox on one side and a Quadrupole Magnet on the other).

The target is mounted to the water manifold, through the Vacuum Chamber - Target Actuator Flange (chamber cover), to the actuator. The entire target /actuator assembly is designed to be easily removed from the beamline by lifting it from above. The Target Actuator Flange has four 1-1/3 inch Conflat™ ports, two are feed-throughs for target thermocouples and two are for future use.

The Chopper Target Vacuum Chamber Assembly View Port Flanges (front and rear covers) are identical and contain two Conflat™ ports, one 4½ inches in diameter and the other 2 ¾ inches in diameter. These flanges are interchangeable and are initially mounted rotated 180° of each other. This arrangement provides for maximum flexibility, in the mounting of future apparatus to the chamber, in the least amount of space.

4. Fabrication and Assembly

The vacuum vessel of the Chopper Target Vacuum Chamber Assembly is EDM machined from a single forging of 304 stainless steel. This helped to simplify the fabrication by eliminating the need for fixturing and welding of individual stainless steel plates to create a leak-tight box structure.

The Bottom Plate is welded into the bottom of the chamber after all EDM and conventional machining of the chamber is complete. The Mounting Plates are then pinned and bolted to the bottom plate of the chamber. The final machining of the mounting plate raft mounting holes is done in the assembled condition to insure a positional tolerance of 0.005”.

The finished chamber was fiducializied on the coordinate measuring machine (CMM) to verify its position, relative to the beamline, after being mounted to the raft #2 assembly.

5. Reference

5.1 T.Saleh, D. Oshatz, Y. Minamihara, “MEBT Chopper Target Final Design”, SNS-FES Technote FE-ME-031, June 2000

5.2 D. Oshatz, A DeMello, L. Doolittle, P. Luft, J. Staples, A. Zachoszcz, “Mechanical Design Of The SNS MEBT, PAC ’01, Chicago, June 2001
URL: http://accelconf.web.cern.ch/AccelConf/p01/HTML/A02277.HTM

5.3 D. Oshatz, T.Saleh, Y. Minamihara, R. DiGennaro, “MEBT Chopper Target Final Design Review”, SNS-FES Technote FE-ME-032, June 2000

6. SNS-FE Personnel

Daryl Oshatz, MEBT Lead Mechanical Engineer
Allan J. DeMello, Mechanical Engineer
Yoshi Minimahara, Mechanical Design Technician
Don Syversrud, Lead Mechanical Technician

7. Appendices

Appendix A: Component and Assembly Drawings
Appendix B: CAD Renderings and Photographs
Appendix C: Outside Vendor Component Information
Appendix D: Chamber Fiducialization Data
Appendix E: Miscellaneous Information and Purchases

Appendix A

Component and Assembly Drawings

DWG. NO.	SIZE	REV.	SH.
25B1001		A	1

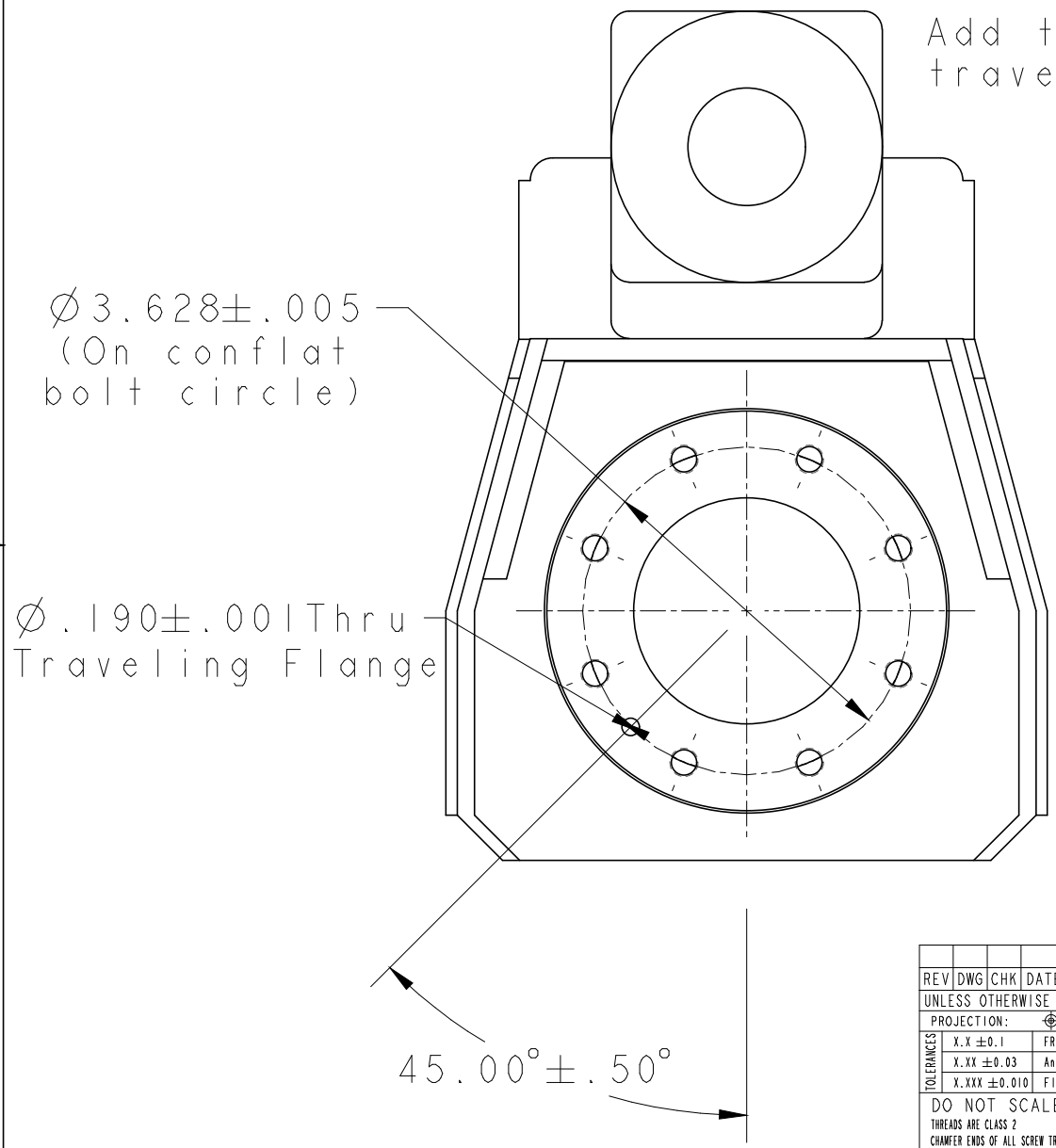

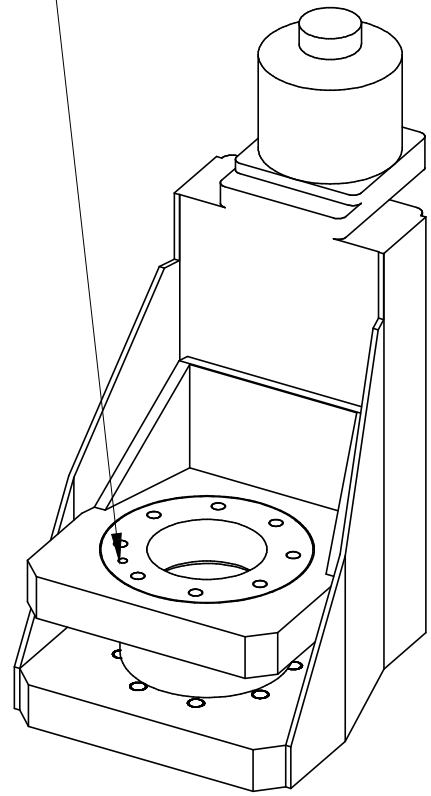

Thermionics Precision Linear Translator

REV	DWG	CHK	DATE	CHANGES	DESCRIPTION	MATERIAL
					Locating hole added to standard part	-

UNLESS OTHERWISE SPECIFIED

PROJECTION:

TOLERANCES		
	X.X ±0.1	FRAC. ±1/64
	X.XX ±0.03	Angles ±1.0°
	X.XXX ±0.010	FINISH 125

DO NOT SCALE PRINT

THREADS ARE CLASS 2
CHAMFER ENDS OF ALL SCREW TREADS 30°
CUT ROUND, 1.5 THREAD RELIEF ON MACHINED THREADS
BREAK EDGES .016 MAX. ON MACHINED WORK
REMOVE BURRS, WELD SPLATTER & LOOSE SCALE
IN ACCORDANCE WITH ASME Y14.5M & B46.1

SHOP ORDERS

SER NO.	-		
ACCT NO.		NO. REQD	DATE ISSD -
DEL TO			DATE REQD -
SURFACE TREATMT	-		
IDENT METHOD	TAG		
PROJECT NUMBER	na		
PROJECT NAME	Thermionics, Northwest Inc.		
DWG BY	D. Oshatz	DATE	13-Jul-00
CHK BY	None	DATE	
APR BY	None	DATE	

ERNEST ORLANDO LAWRENCE BERKELEY NATIONAL LABORATORY
UNIVERSITY OF CALIFORNIA - BERKELEY

SNS - FES MEBT
Mech. Beam Trans. Systems - Chopper Target
Modified Actuator, EMT-2.5-2/ Block Up

MICROFILMED:	DWG. TYPE	SHOWN ON	SCALE: 1/2	DO NOT SCALE PRINTS
	PART	-	SHEET 1 OF 1	
PATENT CLEAR:	DESIGN ACCT. NO.	CATEGORY CODE	DWG. NO.	SIZE / REV.
	-	FE-3312	25B1001	A

Dwg. File: 25B100 Model File: 25B100

Rev. 1/29/2000 J. R. Osborn

DWG. NO.	SIZE	REV.	SH.
25B1901		A	1

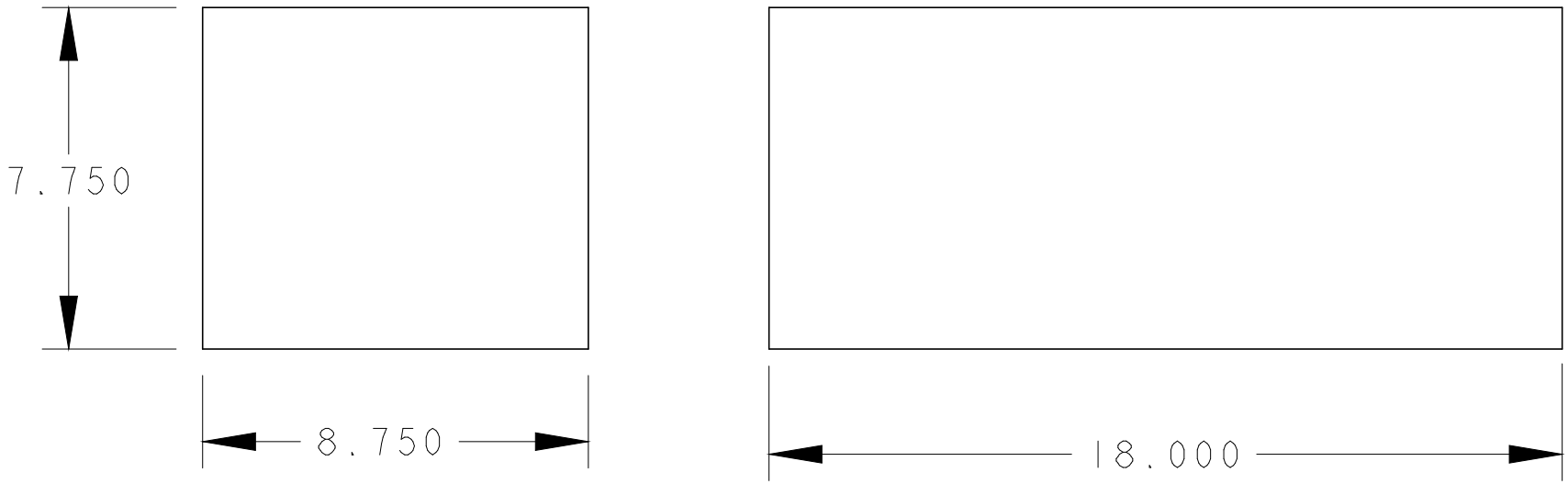

REV	DWG	CHK	DATE	CHANGES

FORGING, SUPPLIED BY LBNL	304 SS
DESCRIPTION	MATERIAL

UNLESS OTHERWISE SPECIFIED

PROJECTION:

TOLERANCES		
	X.X ±0.1	FRAC. ±1/64
	X.XX ±0.03	Angles ±1.0°
	X.XXX ±0.010	FINISH 125

DO NOT SCALE PRINT

THREADS ARE CLASS 2
CHAMFER ENDS OF ALL SCREW TREADS 30°
CUT ROUND, 1.5 THREAD RELIEF ON MACHINED THREADS
BREAK EDGES .016 MAX. ON MACHINED WORK
REMOVE BURRS, WELD SPLATTER & LOOSE SCALE
IN ACCORDANCE WITH ASME Y14.5M & B46.1

SHOP ORDERS

ACCT NO.	NO. REQD	SER NO.	-
		DATE ISSD	-
DEL TO		DATE REQD	-
SURFACE TREATMT	-		
IDENT METHOD	TAG		
PROJECT NUMBER	N/A		
PROJECT NAME	N/A		
DWG BY	Allan DeMello	DATE	04-Jan-01
CHK BY	D. Oshatz	DATE	
APR BY	D. Oshatz	DATE	

ERNEST ORLANDO LAWRENCE BERKELEY NATIONAL LABORATORY
UNIVERSITY OF CALIFORNIA - BERKELEY

SNS - FES MEBT
CHOPPER TARGET
STAINLESS STEEL FORGING

MICROFILMED:	DWG. TYPE	SHOWN ON	SCALE: 1/4	DO NOT SCALE PRINTS
	PART	25B401	SHEET 1 OF 1	
PATENT CLEAR:	DESIGN ACCT. NO.	CATEGORY CODE	DWG. NO.	SIZE / REV.
	-	FE3312	25B1901	A

Dwg. File: 25B190 Model File: 25B190

Rev. 1/29/2000 J. R. Osborn

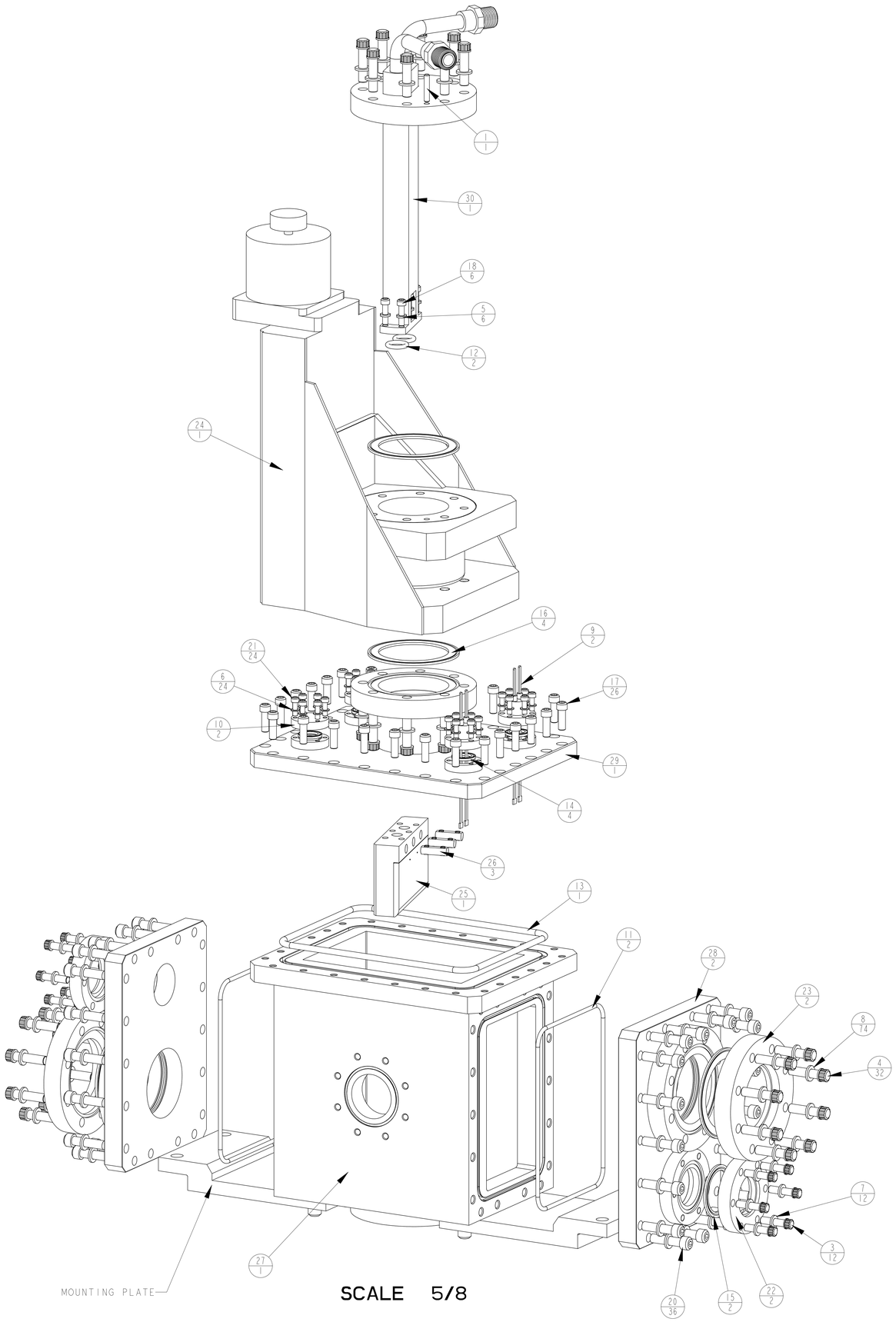

SCALE 5/8

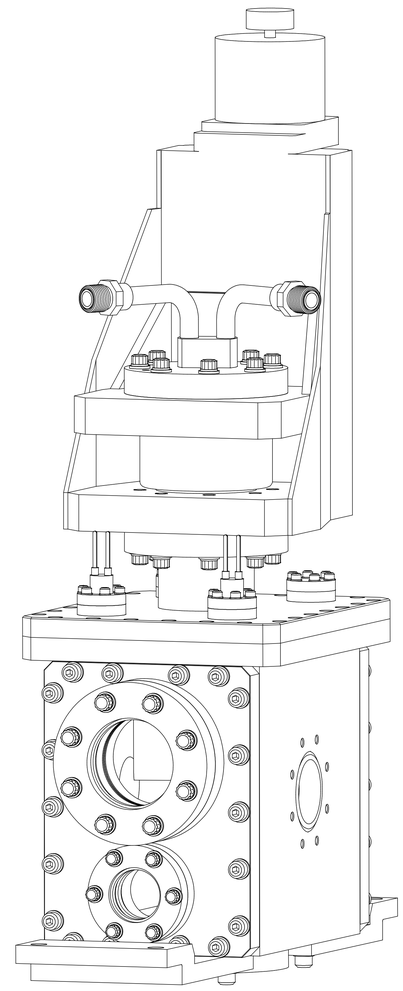

SCALE 5/8

ITEM	PART NO	REQD	DESCRIPTION	MATERIAL
30	25B413	1	WATER MANIFOLD	-
29	25B410	1	VACUUM CHAMBER - TARGET ACTUATOR FLANGE WELDMENT	304 SS
28	25B408	2	VIEW PORT FLANGE WELDMENT	304 SS
27	25B407	1	VACUUM CHAMBER LOWER ASSEMBLY	-
26	25B167	3	10-32 BARREL NUT	304 SS
25	25B166	1	TARGET BRAZEMENT - FINAL MACHINING	MOLYBDENUM TZM
24	25B100	1	Modified Actuator, EMT-2.5-2/ Block Up	-
23	-	2	VIEWPORT, 4.5" , GLASS, MDC P/N 450004 OR EQUIV.	-
22	-	2	VIEWPORT, 2.75" , GLASS, MDC P/N 450002 OR EQUIV.	-
21	-	24	SOCKET HEAD CAP SCREW, 8-32 x .5", SILVER PLATED	300 SS
20	-	36	SOCKET HEAD CAP SCREW, 5/16-18 x 1.25", SILVER PLATED	316 SS
19	-	6	SOCKET HEAD CAP SCREW, 5/16-18 x 1", SILVER PLATED	316 SS
18	-	6	SOCKET HEAD CAP SCREW, 10-32 x .75", SILVER PLATED	316 SS
17	-	26	SOCKET HEAD CAP SCREW, 1/4-20 x .75", SILVER PLATED	316 SS
16	-	4	OFE COPPER GASKET, 4-1/2", MDC P/N 191009 OR EQUIV.	OFE Copper
15	-	2	OFE COPPER GASKET, 2-3/4", MDC P/N 191004 OR EQUIV.	OFE Copper
14	-	4	OFE COPPER GASKET, 1-1/3", MDC P/N 191000 OR EQUIV.	OFE Copper
13	-	1	O-RING, 3/16"x 8-1/4" I.D., PARKER P/N 2-370 OR EQUIV.	VITON
12	-	2	O-RING, 1/8" x 9/16" I.D., PARKER P/N 2-207 OR EQUIV.	VITON
11	-	2	O-RING, 1/8" x 6-3/4" I.D., PARKER P/N 2-261 OR EQUIV.	VITON
10	-	2	MINI-CONFLAT FLANGE, MDC P/N 110000 OR EQUIV.	304 SS
9	-	2	K-TYPE THERMOCOUPLE, CERAMASEAL P/N 8118-01-CF OR EQUIV.	-
8	-	74	FLAT WASHER, 5/16", MCMASTER-CARR #98017A690 OR EQUIV.	SS 18-8
7	-	12	FLAT WASHER, 1/4", MCMASTER-CARR #90945A761 OR EQUIV.	SS
6	-	24	FLAT WASHER, #8, MCMASTER-CARR #90945A726 OR EQUIV.	SS
5	-	6	FLAT WASHER, #10, MCMASTER-CARR #90945A741 OR EQUIV.	SS
4	-	32	12-PT BOLT, 5/16-24 x 1.25", MDC P/N 190058 OR EQUIV.	300 SS
3	-	12	12-PT BOLT, 1/4-28 x .875", MDC P/N 190057 OR EQUIV.	300 SS
2	-	4	.250 x 1" DOWEL PIN	316 SS
1	-	1	.1875 x 1" DOWEL PIN	316 SS

NOTES:

1. FINISHED PART TO BE VACUUM TIGHT.
   LEAK RATE NOT TO EXCEED
   1 X 10^-8 TORR - LITERS PER SECOND HELIUM.
2. ULTRA-HIGH VACUUM CLEANING AND PACKING REQUIRED.
3. ASSEMBLE IN CLEAN ENVIRONMENT.
   AFTER ASSEMBLY, WRAP TO MAINTAIN CLEANLINESS.

REV	DWG	CHK	ZONE	DATE	CHANGES
A	AD			5/01	INITIAL RELEASE

UNLESS OTHERWISE SPECIFIED
PROJECTION:
TOLERANCES: X.X ± 0.1 FRAC. ± 1/64; X.XX ± 0.03 Angles ± 1.0°; X.XXX ± 0.010 FINISH 125
DO NOT SCALE PRINT
THREADS ARE CLASS 2
CHAMFER ENDS OF ALL SCREW THEADS 30°
CUT ROUND, 1.5 THREAD RELIEF ON MACHINED THREADS
BREAK EDGES .016 MAX. ON MACHINED WORK
REMOVE BURRS, WELD SPLATTER & LOOSE SCALE
IN ACCORDANCE WITH ASME Y14.5M & B46.1

SHOP ORDERS
ACCT NO. / NO. REQD / SER NO. / DATE / ISSD / DATE / REQD / DATE
SURFACE TREATMT -
IDENT METHOD TAG
PROJECT NUMBER na
PROJECT NAME -
DWN By Allan DeMello DATE 17-May-01
CHK By D. Oshatz DATE
APP By D. Oshatz DATE

ERNEST ORLANDO LAWRENCE BERKELEY NATIONAL LABORATORY
UNIVERSITY OF CALIFORNIA - BERKELEY

SNS - FES MEBT
CHOPPER TARGET
TARGET CHAMBER, COMPLETE ASSEMBLY

MICROFILMED: | DWG. TYPE: ASSEM | SHOWN ON: - | SCALE: 5/8 | DO NOT SCALE PRINTS | SHEET 1 OF 2
PATENT CLEAR: | DESIGN ACCT. NO.: - | CATEGORY CODE: FE3312 | DWG. NO.: 25B4006 | SIZE: A | REV.:

DWG. NO. 25B4006 A 1

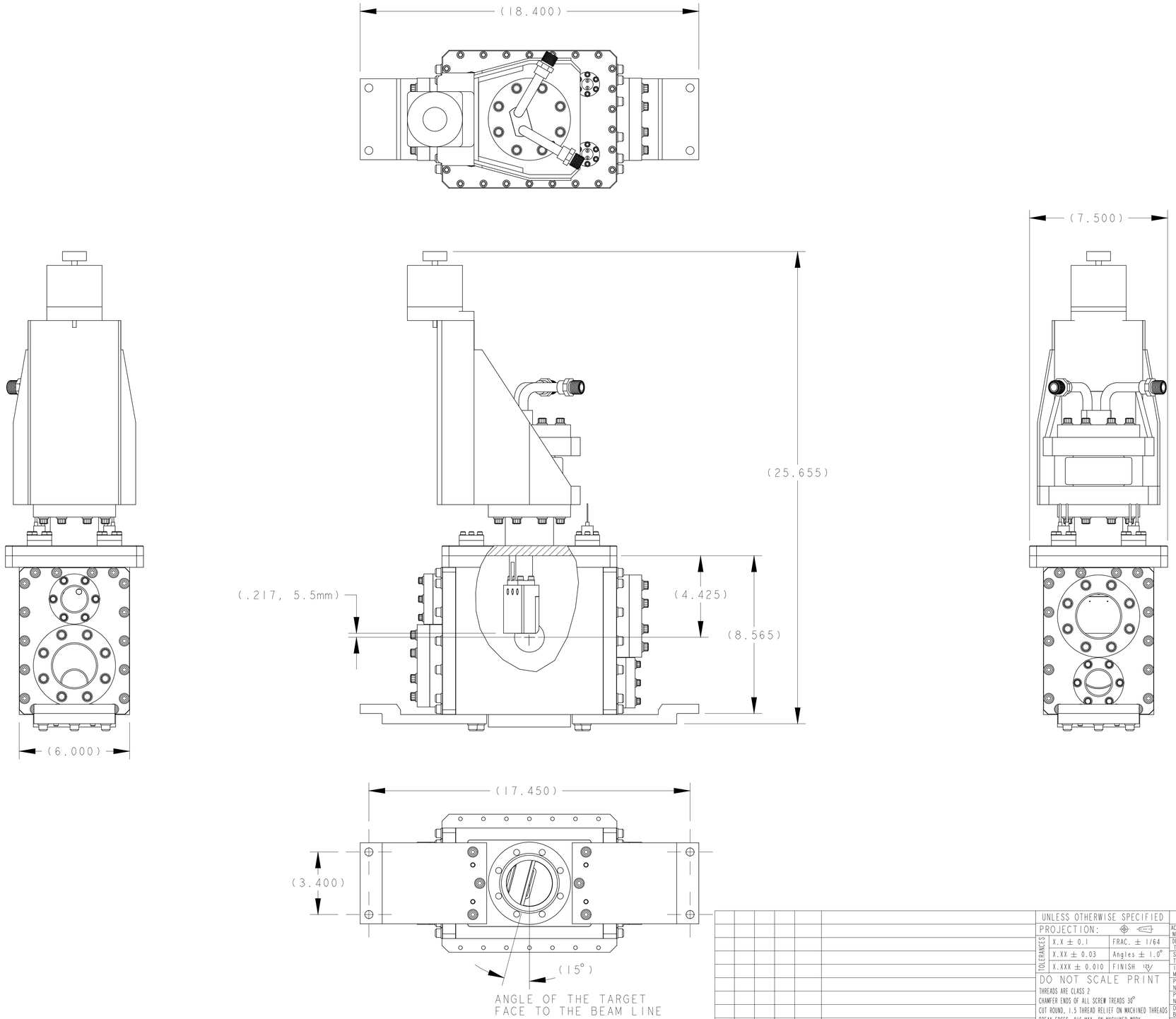

REV	DWG	CHK	ZONE	DATE	CHANGES
A	AD			5/01	INITIAL RELEASE

UNLESS OTHERWISE SPECIFIED
PROJECTION:

TOLERANCES		
	X.X ± 0.1	FRAC. ± 1/64
	X.XX ± 0.03	Angles ± 1.0°
	X.XXX ± 0.010	FINISH 125

DO NOT SCALE PRINT

THREADS ARE CLASS 2
CHAMFER ENDS OF ALL SCREW TREADS 30°
CUT ROUND, 1.5 THREAD RELIEF ON MACHINED THREADS
BREAK EDGES .016 MAX. ON MACHINED WORK
REMOVE BURRS, WELD SPLATTER & LOOSE SCALE
IN ACCORDANCE WITH ASME Y14.5M & B46.1

SHOP ORDERS

ACCT NO.	NO. REQD	SER NO.	-
DEL TO		DATE ISSD	-
SURFACE TREATMT	-	DATE REQD.	-
IDENT METHOD	TAG		
PROJECT NUMBER	na		
PROJECT NAME	-		
DWG BY	Allan DeMello	DATE	17-May-01
CHK BY	D. Oshatz	DATE	
APR BY	D. Oshatz	DATE	

ERNEST ORLANDO LAWRENCE
BERKELEY NATIONAL LABORATORY
UNIVERSITY OF CALIFORNIA - BERKELEY

SNS - FES MEBT
CHOPPER TARGET
TARGET CHAMBER, COMPLETE ASSEMBLY

MICROFILMED:	DWG. TYPE	SHOWN ON	SCALE: 11/32	DO NOT SCALE PRINTS
	ASSEM	-	SHEET 2 OF 2	
PATENT CLEAR:	DESIGN ACCT. NO.	CATEGORY CODE	DWG. NO.	SIZE / REV.
	-	FE3312	25B4004	A

Dwg. File: 25B4004_Model_File: 25B4004

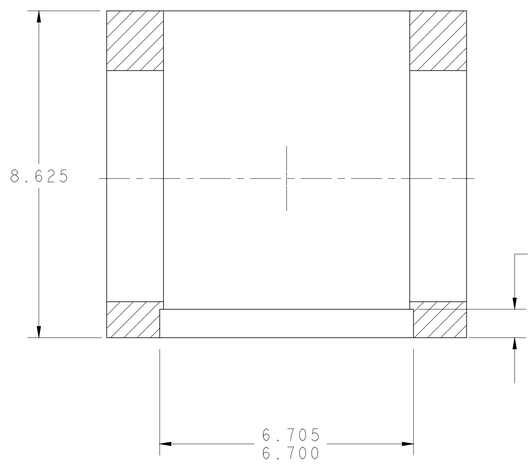

SECTION Y-Y

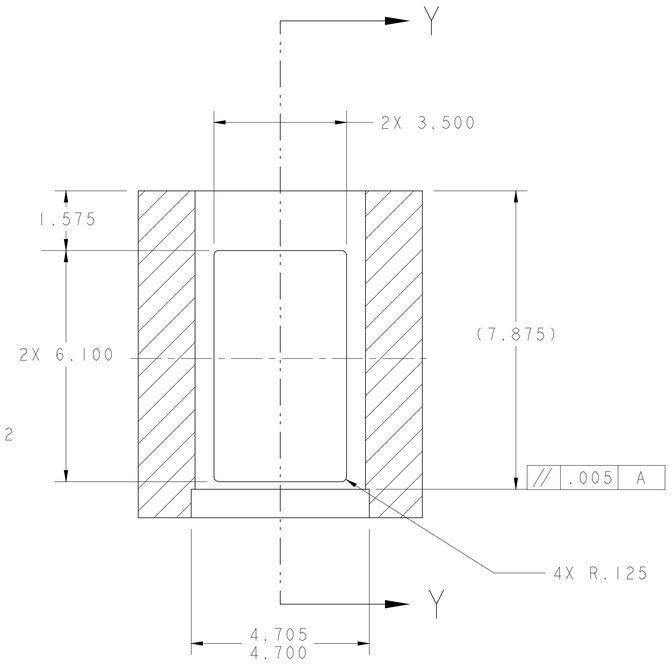

SECTION X-X

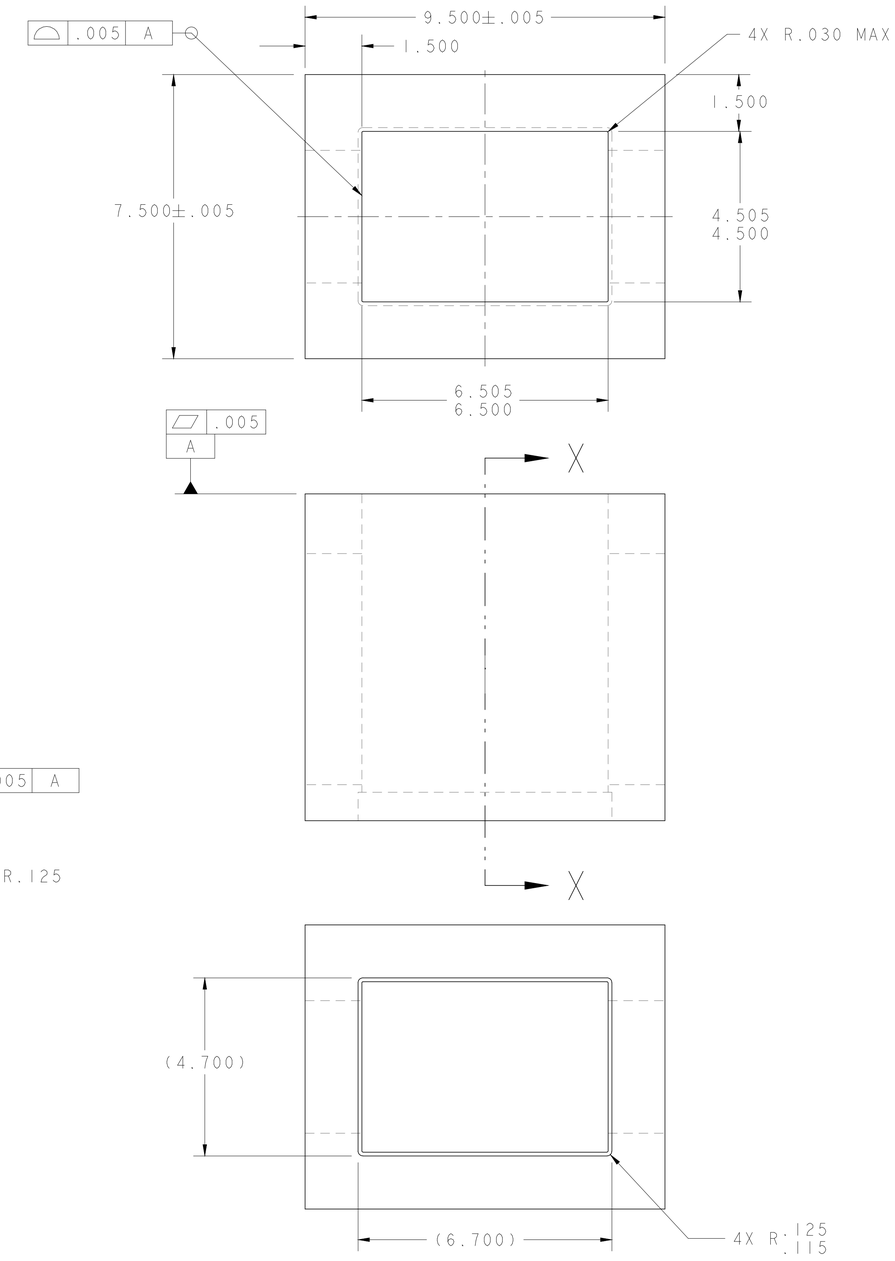

NOTES:
1. STRESS RELIEVE PART PRIOR TO FINAL MACHINING. (OR PRIOR TO EDM CUT)

ITEM	PART NO	REQD	MATERIAL	MAT. LOCATION
	25B190		304 SS FORGING	-

REV	DWG	CHK	ZONE	DATE	CHANGES

UNLESS OTHERWISE SPECIFIED
PROJECTION:
TOLERANCES: X.X ± 0.1 FRAC. ± 1/64; X.XX ± 0.03 Angles ± 1.0°; X.XXX ± 0.010 FINISH 125
DO NOT SCALE PRINT
THREADS ARE CLASS 2
CHAMFER ENDS OF ALL SCREW THREADS 30°
CUT ROUND, 1.5 THREAD RELIEF ON MACHINED THREADS
BREAK EDGES .016 MAX. ON MACHINED WORK
REMOVE BURRS, WELD SPLATTER & LOOSE SCALE
IN ACCORDANCE WITH ASME Y14.5M & B46.1

SHOP ORDERS
ACCT NO. / NO. REQD / DATE ISSD
DEL TO / DATE REQD
SURFACE TREATMT
IDENT METHOD TAG
PROJECT NUMBER
PROJECT NAME
DWG BY Allan DeMello DATE 14-Nov-00
CHK BY D. Oshatz DATE
APR BY D. Oshatz DATE

SER NO. -

ERNEST ORLANDO LAWRENCE BERKELEY NATIONAL LABORATORY
UNIVERSITY OF CALIFORNIA - BERKELEY

SNS - FES MEBT
CHOPPER TARGET
VACUUM CHAMBER - INITIAL MACHINING

MICROFILMED: | DWG. TYPE: PART | SHOWN ON: 25B405 | SCALE: 1/2 | DO NOT SCALE PRINTS
PATENT CLEAR: | DESIGN ACCT. NO.: - | CATEGORY CODE: FE3312 | DWG. NO.: 25B4014 | SIZE: A | REV.
SHEET 1 OF 1

Dwg. File: 25B4014_Model_File: 25B4014

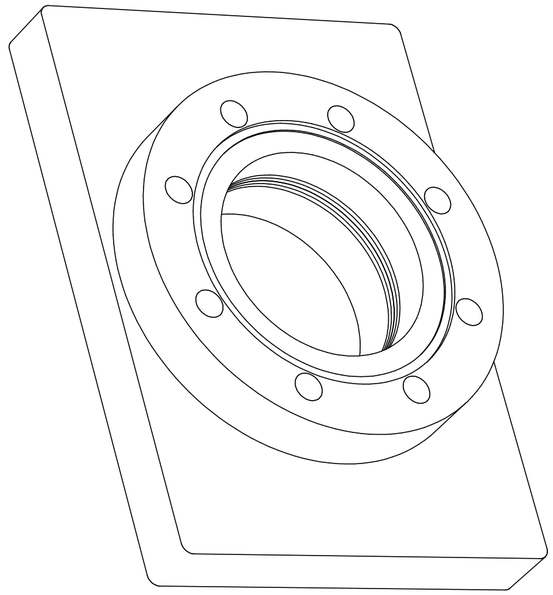

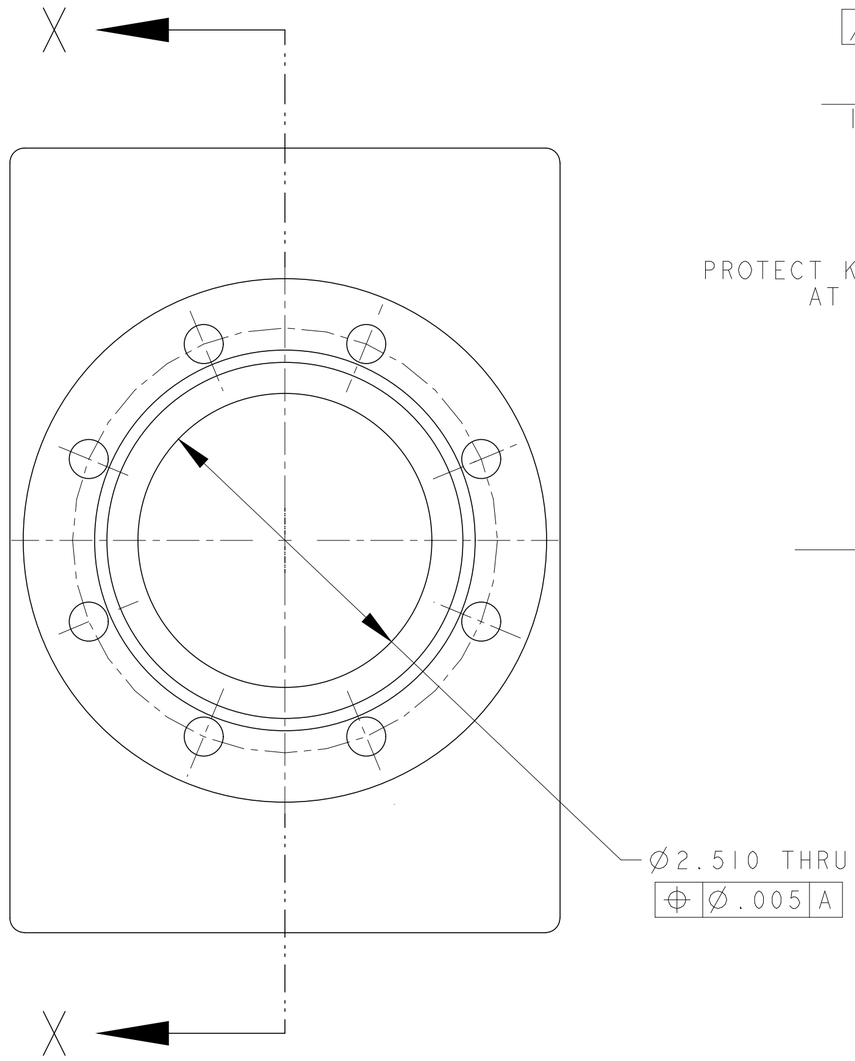

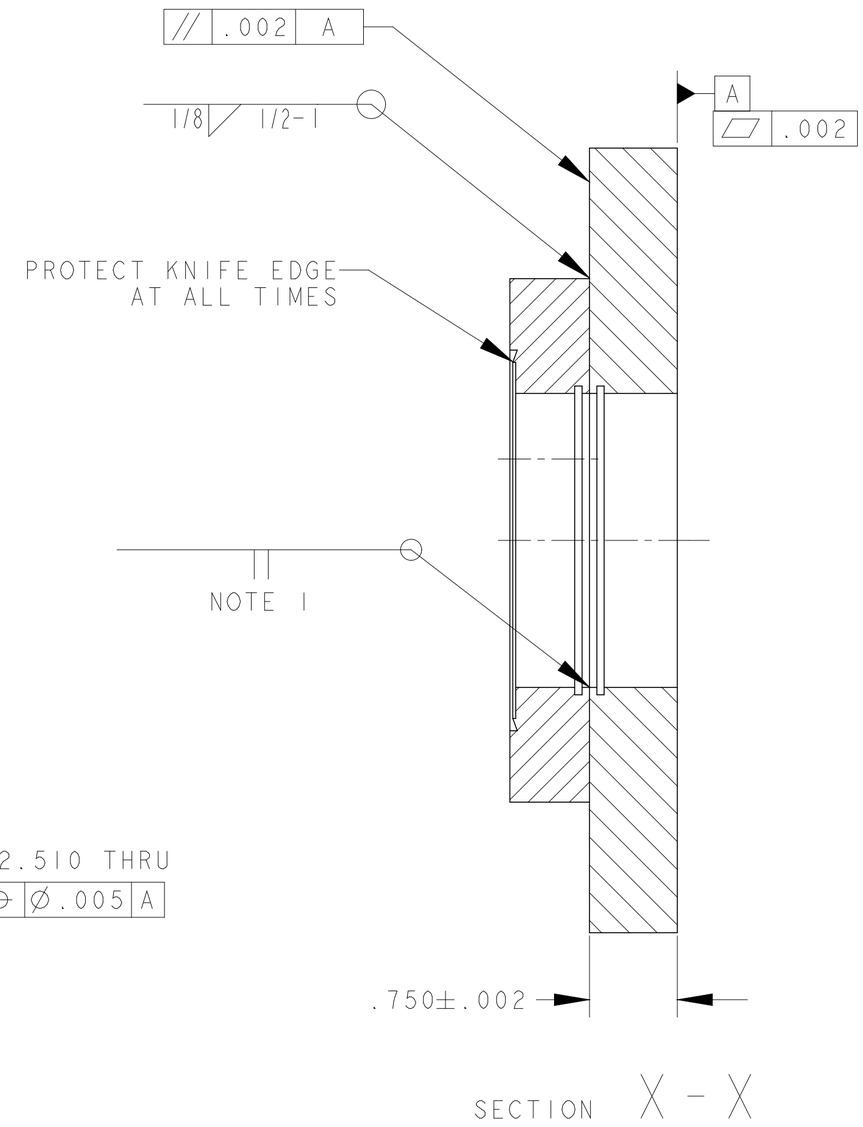

NOTES:

1. FINISHED PART TO BE VACUUM TIGHT.
   LEAK RATE NOT TO EXCEED 1 X 10^-8 TORR - LITERS PER SECOND HELIUM.

2. ULTRA-HIGH VACUUM CLEANING AND PACKING REQUIRED.

3. ASSEMBLE IN CLEAN ENVIRONMENT.
   AFTER ASSEMBLY AND WELDING, WRAP TO MAINTAIN CLEANLINESS.

4. PROTECT CONFLAT FLANGE KNIFE EDGE AT ALL TIMES.

ITEM	PART NO	REQD	DESCRIPTION	MATERIAL
2	25B404	1	VIEWPORT, 4.5" CONFLAT FLANGE	304 SS
1	25B403	1	VACUUM CHAMBER - BOTTOM PLATE	304 SS

REV	DWG	CHK	ZONE	DATE	CHANGES

UNLESS OTHERWISE SPECIFIED
PROJECTION:

TOLERANCES	
X.X ± 0.1	FRAC. ± 1/64
X.XX ± 0.03	Angles ± 1.0°
X.XXX ± 0.010	FINISH 125

DO NOT SCALE PRINT

THREADS ARE CLASS 2
CHAMFER ENDS OF ALL SCREW TREADS 30°
CUT ROUND, 1.5 THREAD RELIEF ON MACHINED THREADS
BREAK EDGES .016 MAX. ON MACHINED WORK
REMOVE BURRS, WELD SPLATTER & LOOSE SCALE
IN ACCORDANCE WITH ASME Y14.5M & B46.1

SHOP ORDERS

SER NO.	-		
ACCT NO.		NO. REQD	
DATE ISSD	-		
DEL TO		DATE REQD	-
SURFACE TREATMT	-		
IDENT METHOD	TAG		
PROJECT NUMBER	na		
PROJECT NAME	N/A		
DWG BY	Allan DeMello	DATE	02-Jan-01
CHK BY	D. Oshatz	DATE	
APR BY	D. Oshatz	DATE	

ERNEST ORLANDO LAWRENCE
BERKELEY NATIONAL LABORATORY
UNIVERSITY OF CALIFORNIA - BERKELEY

SNS - FES MEBT
CHOPPER TARGET
BOTTOM PLATE ASSEMBLY

MICROFILMED:	DWG. TYPE	SHOWN ON	SCALE: 1/1	DO NOT SCALE PRINTS
	ASSEM	25B405	SHEET 1 OF 1	
PATENT CLEAR:	DESIGN ACCT. NO.	CATEGORY CODE	DWG. NO.	SIZE / REV.
	-	FE3312	25B4023	A

Dwg. File: 25B402 Model File: 25B402
Rev. 1/28/2009 J. R. Oshatz

DWG. NO. 25B4023 SIZE A REV. 1 SH. 1

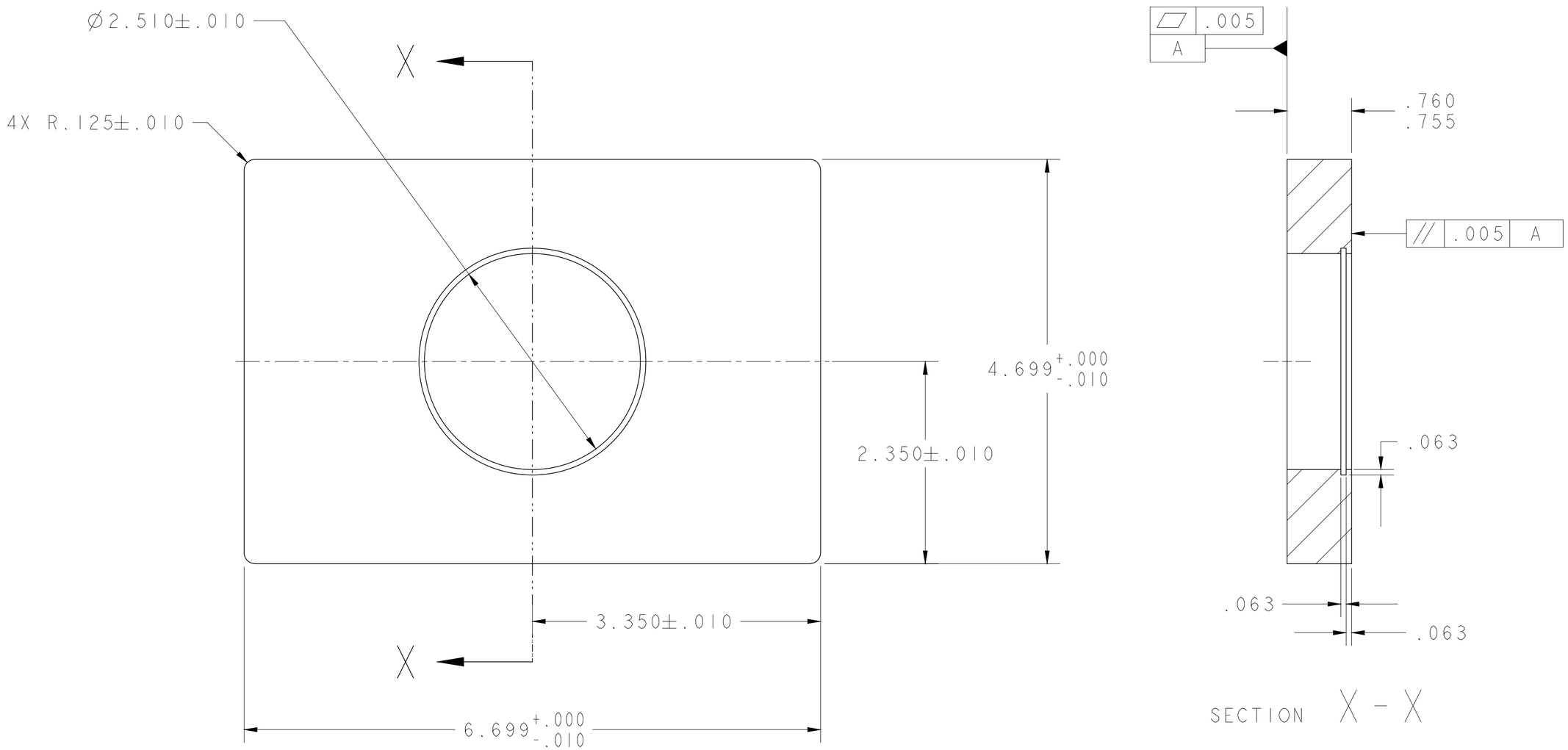

-	304 SS	-
DESCRIPTION	MATERIAL	MAT. LOCATION

REV	DWG	CHK	ZONE	DATE	CHANGES

UNLESS OTHERWISE SPECIFIED
PROJECTION:

TOLERANCES		
	X.X ± 0.1	FRAC. ± 1/64
	X.XX ± 0.03	Angles ± 1.0°
	X.XXX ± 0.010	FINISH 125

DO NOT SCALE PRINT

THREADS ARE CLASS 2
CHAMFER ENDS OF ALL SCREW TREADS 30°
CUT ROUND, 1.5 THREAD RELIEF ON MACHINED THREADS
BREAK EDGES .016 MAX. ON MACHINED WORK
REMOVE BURRS, WELD SPLATTER & LOOSE SCALE
IN ACCORDANCE WITH ASME Y14.5M & B46.1

SHOP ORDERS

ACCT NO.	NO. REQD	SER NO.	-
DEL TO		DATE ISSD	-
		DATE REQD	-
SURFACE TREATMT	-		
IDENT METHOD	TAG		
PROJECT NUMBER	na		
PROJECT NAME	N/A		
DWG BY	Allan DeMello	DATE	08-Oct-00
CHK BY	D. Oshatz	DATE	
APR BY	D. Oshatz	DATE	

ERNEST ORLANDO LAWRENCE BERKELEY NATIONAL LABORATORY
UNIVERSITY OF CALIFORNIA - BERKELEY

SNS - FES MEBT
CHOPPER TARGET
VACUUM CHAMBER - BOTTOM PLATE

MICROFILMED:	DWG. TYPE: PART	SHOWN ON: 25B402	SCALE: 1/1 — DO NOT SCALE PRINTS
			SHEET 1 OF 1
PATENT CLEAR:	DESIGN ACCT. NO.: -	CATEGORY CODE: FE3312	DWG. NO.: 25B4033 — SIZE: A — REV.:

Dwg. File: 25B403 Model File: 25B403
Rev 1/28/2009 L. Oshatz

DWG. NO. 25B4033 SIZE A REV. SH. 1

DWG. NO.	SIZE	REV.	SH.
25B4042	A	1	

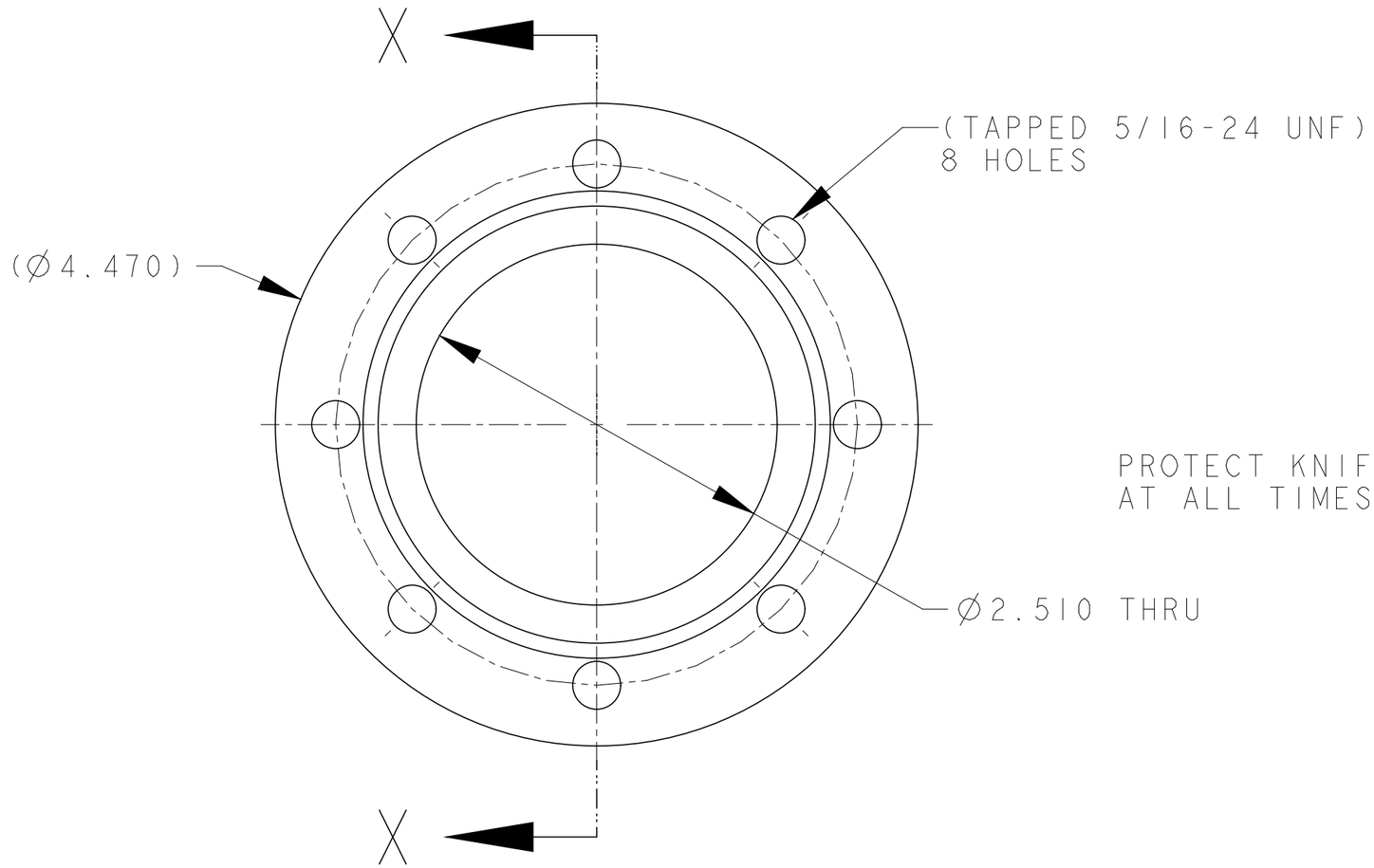

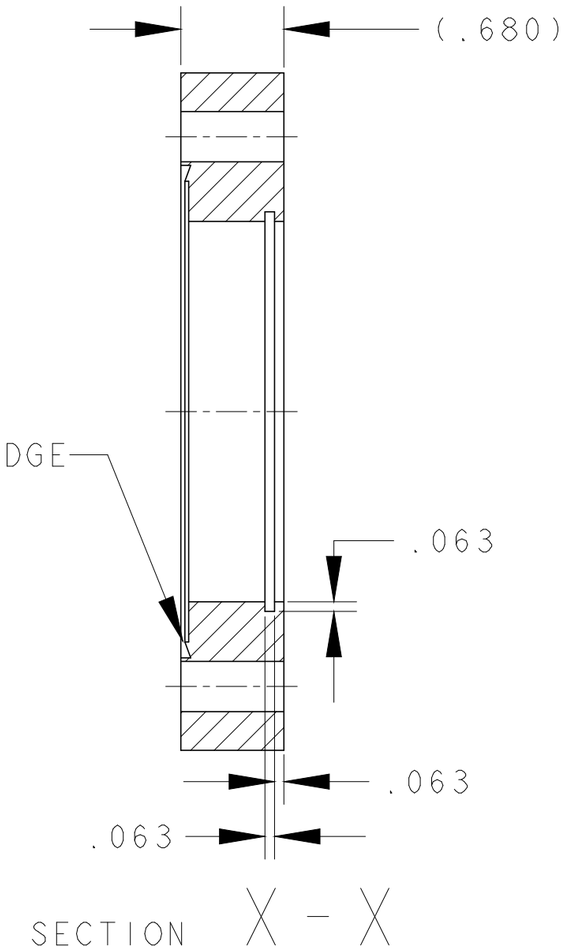

MDC PN 130021 OR EQUIV.	304 SS	-
DESCRIPTION	MATERIAL	MAT. LOCATION

REV	DWG	CHK	ZONE	DATE	CHANGES

UNLESS OTHERWISE SPECIFIED

PROJECTION:

TOLERANCES		
	X.X ± 0.1	FRAC. ± 1/64
	X.XX ± 0.03	Angles ± 0.5°
	X.XXX ± 0.010	FINISH 125

DO NOT SCALE PRINT

THREADS ARE CLASS 2
CHAMFER ENDS OF ALL SCREW TREADS 30°
CUT ROUND, 1.5 THREAD RELIEF ON MACHINED THREADS
BREAK EDGES .016 MAX. ON MACHINED WORK
REMOVE BURRS, WELD SPLATTER & LOOSE SCALE
IN ACCORDANCE WITH ASME Y14.5M & B46.1

SHOP ORDERS

ACCT NO.	NO. REQD	SER NO.	-
DEL TO		DATE ISSD	-
		DATE REQD	-
SURFACE TREATMT			
IDENT METHOD	TAG		
PROJECT NUMBER			
PROJECT NAME			
DWG BY	Allan DeMello	DATE	18-Dec-00
CHK BY	D. Oshatz	DATE	
APR BY	D. Oshatz	DATE	

ERNEST ORLANDO LAWRENCE
BERKELEY NATIONAL LABORATORY
UNIVERSITY OF CALIFORNIA - BERKELEY

SNS - FES MEBT
CHOPPER TARGET
VIEWPORT, 4.5" CONFLAT FLANGE

MICROFILMED:	DWG. TYPE	SHOWN ON	SCALE: 1/1	DO NOT SCALE PRINTS
	PART	25B402	SHEET 1 OF 1	
PATENT CLEAR:	DESIGN ACCT. NO.	CATEGORY CODE	DWG. NO.	SIZE / REV.
	-	FE3312	25B4042	A

Rev. 1/29/2000 J. R. Osborn

Dwg. File: 25B404 Model File: 25B404

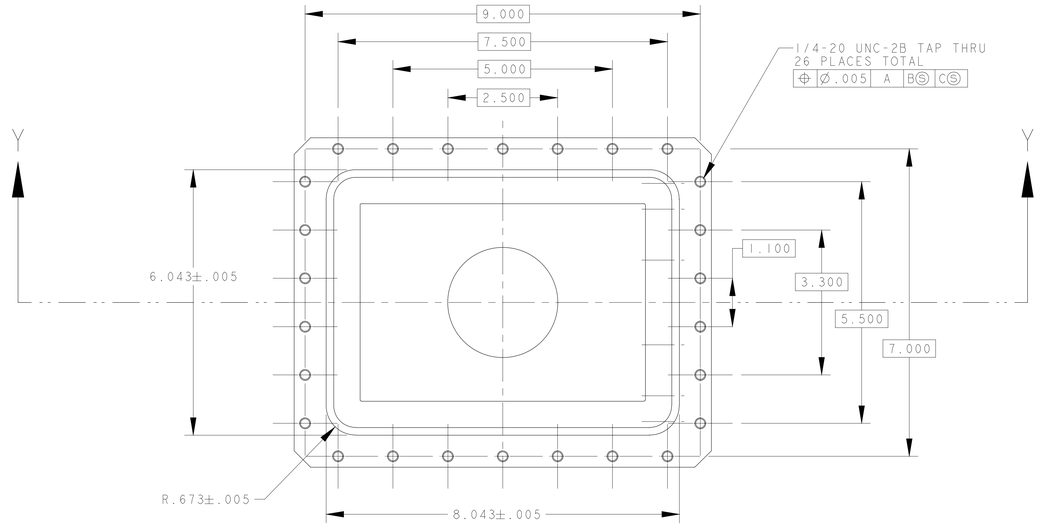

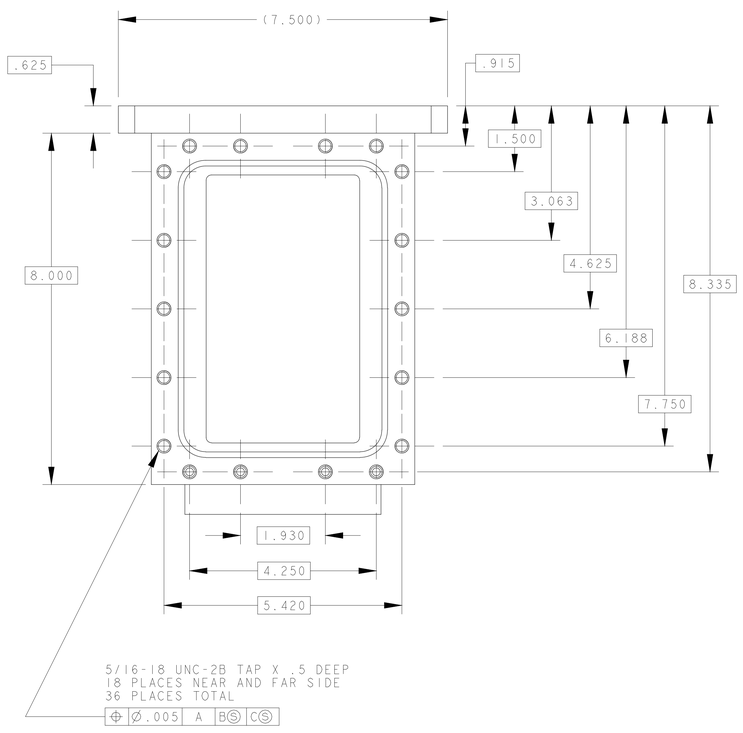

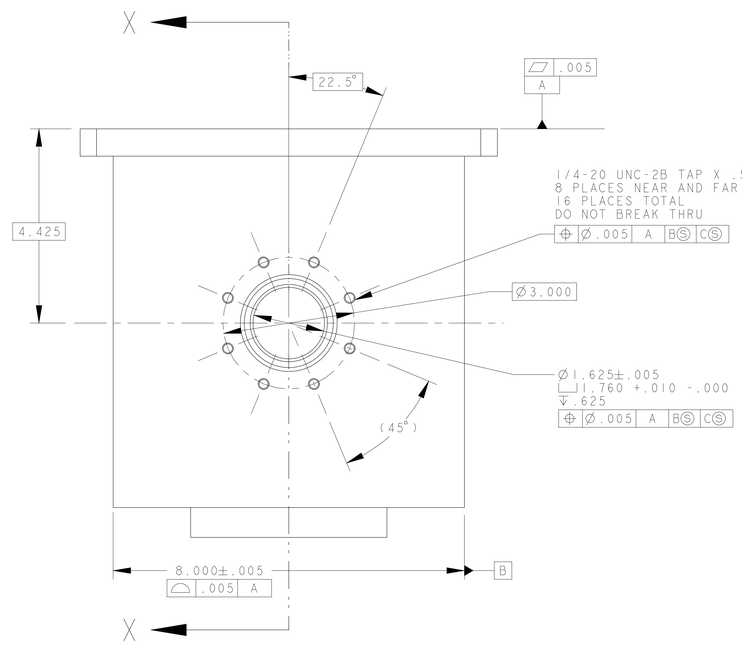

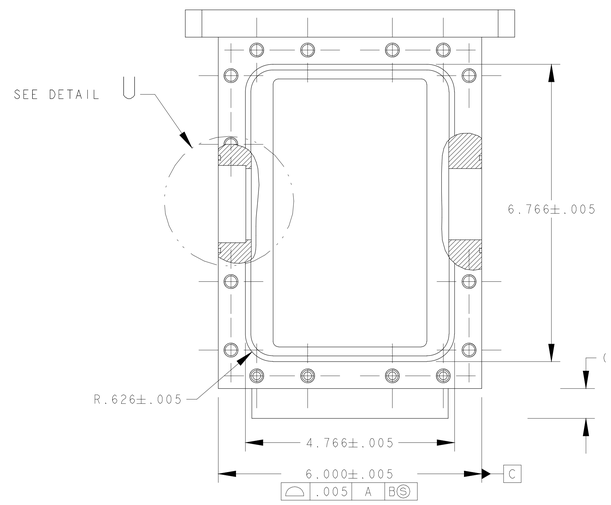

SECTION X - X

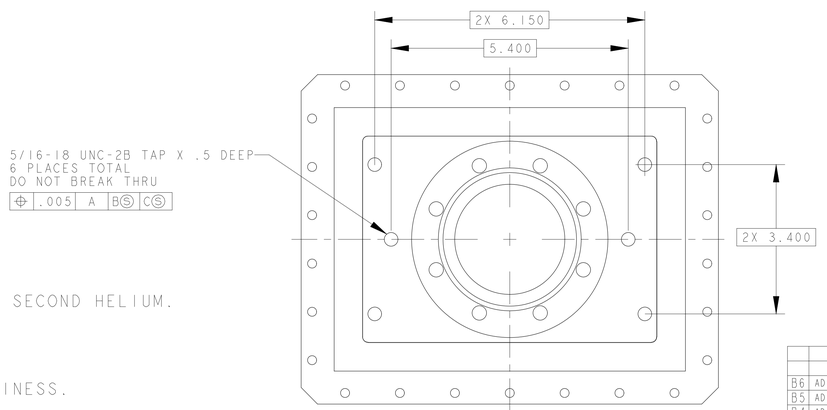

NOTES:

1. FINISHED PART TO BE VACUUM TIGHT.
   LEAK RATE NOT TO EXCEED 1 X 10^-8 TORR - LITERS PER SECOND HELIUM.
2. ULTRA-HIGH VACUUM CLEANING AND PACKING REQUIRED.
3. ASSEMBLE IN CLEAN ENVIRONMENT.
   AFTER ASSEMBLY AND WELDING, WRAP TO MAINTAIN CLEANLINESS.
4. PROTECT CONFLAT FLANGE KNIFE EDGE AT ALL TIMES.

ITEM	PART NO.	REQD	DESCRIPTION	MATERIAL
2	nnXnnn	1	Used in VACUUM_CHAMBER_WELDMENT.asm	304 SS
1	25B402	1	BOTTOM PLATE ASSEMBLY	304 SS

REV	DWG	CHK	ZONE	DATE	CHANGES
B6	AD		D5	1/16/01	CHANGE DIMENSION R .500 TO R .673
B5	AD		C5	1/16/01	CHANGE DIMENSION 7.654 TO 8.043
B4	AD		D6	1/16/01	CHANGE DIMENSION 5.654 TO 6.043
B3	AD		D6	1/16/01	CHANGE 5.654 AND 7.654 FROM BASIC TO ±.005
B2	AD		B1	1/16/01	CHANGE DIMENSION 6.554 TO 6.766
B1	AD		B2	1/16/01	ADD 4.766 & R .626 DIMENSIONS
A				1/04/01	RELEASE FOR QUOTE

UNLESS OTHERWISE SPECIFIED
PROJECTION: ⌖
TOLERANCES: X.X ± 0.1 FRAC. ± 1/64 X.XX ± 0.03 Angles ± 1.0° X.XXX ± 0.010 FINISH 125
DO NOT SCALE PRINT
THREADS ARE CLASS 2
CHAMFER ENDS OF ALL SCREW TREADS 30°
CUT ROUND, 1.5 THREAD RELIEF ON MACHINED THREADS
BREAK EDGES .016 MAX. ON MACHINED WORK
REMOVE BURRS, WELD SPLATTER & LOOSE SCALE
IN ACCORDANCE WITH ASME Y14.5M & B46.1

SHOP ORDERS
ACCT NO.: | NL REQD | DATE | ISSD | DATE | REQD
DEL TO: | SURFACE TREATMENT: | IDENT TAG METHOD: | PROJECT NUMBER: N/A | PROJECT NAME: N/A
DWN By: Allan DeMello DATE 22-Jan-01
CHK By: D. Oshatz DATE
APR By: D. Oshatz DATE

ERNEST ORLANDO LAWRENCE BERKELEY NATIONAL LABORATORY
UNIVERSITY OF CALIFORNIA - BERKELEY

SNS - FES MEBT
CHOPPER TARGET
VACUUM CHAMBER WELDMENT

MICROFILMED: | PATENT CLEAR: | DWG. TYPE: ASSEM | DESIGN ACCT. NO.: - | SHOWN ON: 25B400 | CATEGORY CODE: FE3312 | SCALE: 3/4 | SHEET 1 OF 2 | DWG. NO.: 25B4056 | SIZE: B | REV.: B | DO NOT SCALE PRINTS

DWG. NO. 25B4056 SIZE/REV. B 1

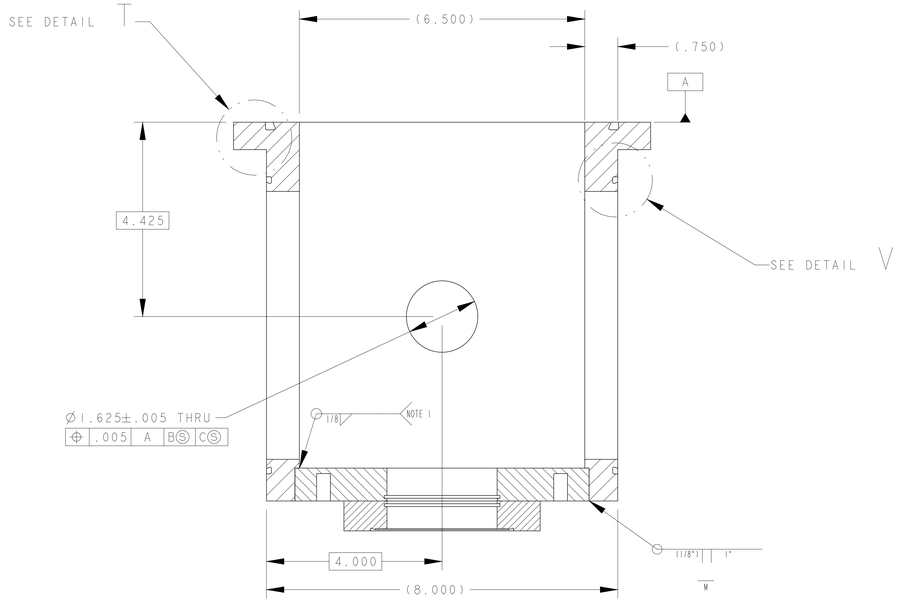

SECTION Y - Y

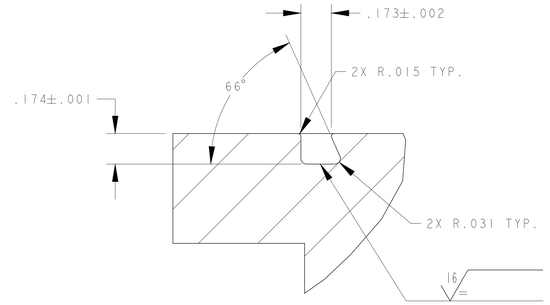

DETAIL T
SCALE 3/1

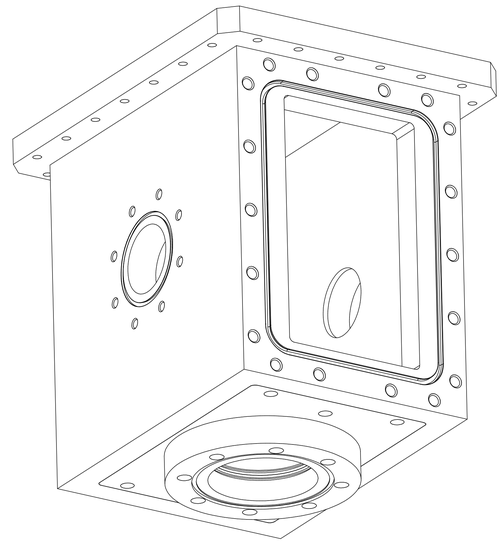

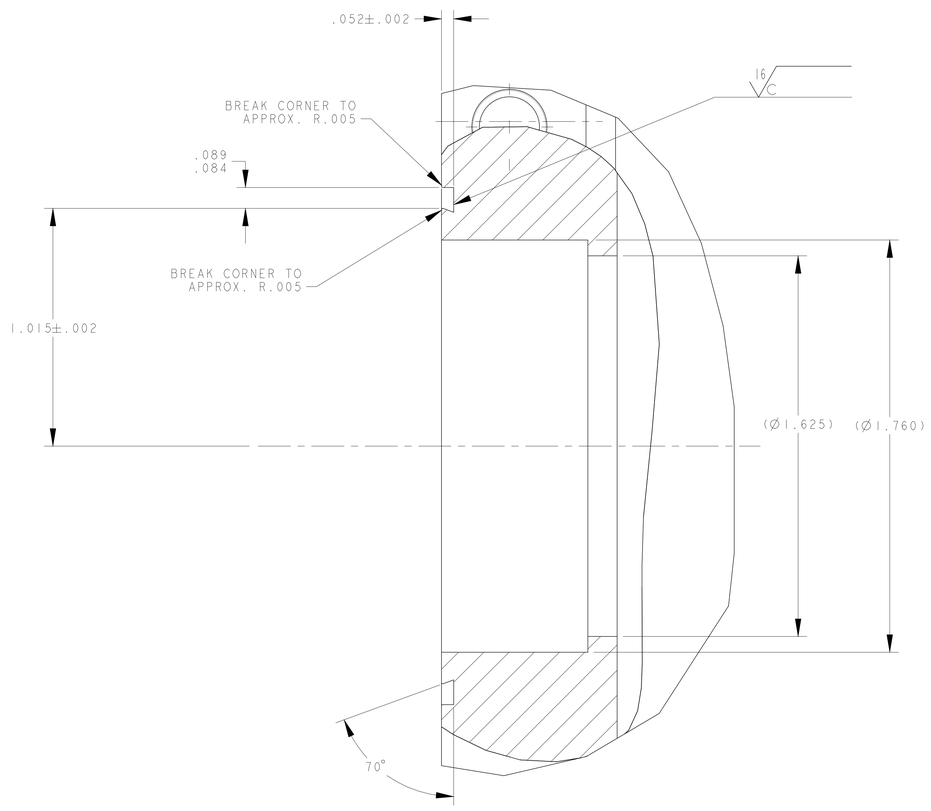

DETAIL U
SCALE 4/1

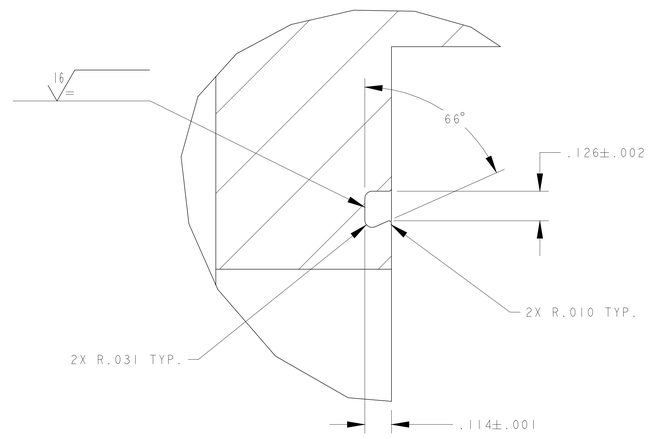

DETAIL V
SCALE 4/1

NOTES:

1. FINISHED PART TO BE VACUUM TIGHT.
   LEAK RATE NOT TO EXCEED 1 X 10^-8 TORR - LITERS PER SECOND HELIUM.
2. ULTRA-HIGH VACUUM CLEANING AND PACKING REQUIRED.
3. ASSEMBLE IN CLEAN ENVIRONMENT.
   AFTER ASSEMBLY AND WELDING, WRAP TO MAINTAIN CLEANLINESS.
4. PROTECT CONFLAT FLANGE KNIFE EDGE AT ALL TIMES.

ITEM	PART NO	REQD	DESCRIPTION	MATERIAL
2	nnXnnn	1	Used in VACUUM_CHAMBER_WELDMENT.asm	304 SS
1	25B402	1	BOTTOM PLATE ASSEMBLY	304 SS

REV	DWG	CHK	ZONE	DATE	CHANGES
B5	AD		D7	1/16/01	REMOVE 3.827 DIMENSION
B4	AD		C7	1/16/01	CHANGE DIMENSION 8.000±.010 TO REFERENCE
B3	AD		D8	1/16/01	ADD ⌖ CALLOUT FOR 1.625 BORE
B2	AD		D8	1/16/01	ADD 1.625 BORE DIMENSION
B1	AD		D7	1/16/01	ADD BASIC DIMENSION OF 4.000
A				1/04/01	RELEASE FOR QUOTE

UNLESS OTHERWISE SPECIFIED
PROJECTION: ⌖
TOLERANCES: X.X ± 0.1 FRAC. ± 1/64; X.XX ± 0.03 Angles ± 1.0°; X.XXX ± 0.010 FINISH 125
DO NOT SCALE PRINT
THREADS ARE CLASS 2
CHAMFER ENDS OF ALL SCREW THEADS 30°
CUT ROUND, 1.5 THREAD RELIEF ON MACHINED THREADS
BREAK EDGES .016 MAX. ON MACHINED WORK
REMOVE BURRS, WELD SPLATTER & LOOSE SCALE
IN ACCORDANCE WITH ASME Y14.5M & B46.1

SHOP ORDERS
SER NO -
ACCT NO. | NO REQD | DATE ISSD -
REL TO | DATE REQD -
SURFACE TREATMT -
IDENT METHOD TAG
PROJECT NUMBER na
PROJECT NAME N/A
DWN Allan DeMello DATE 22-Jan-01
CHK D. Oshatz DATE
APR D. Oshatz DATE

ERNEST ORLANDO LAWRENCE BERKELEY NATIONAL LABORATORY
UNIVERSITY OF CALIFORNIA · BERKELEY

SNS - FES MEBT
CHOPPER TARGET
VACUUM CHAMBER WELDMENT

MICROFILMED: | DWG. TYPE ASSEM | SHOWN ON 25B400 | SCALE: 3/4 | DO NOT SCALE PRINTS
PATENT CLEAR: | DESIGN ACCT. NO. - | CATEGORY CODE FE3312 | DWG. NO. 25B4056 | SIZE B | REV. B
SHEET 2 OF 2

DWG. NO. 25B4056 B 2

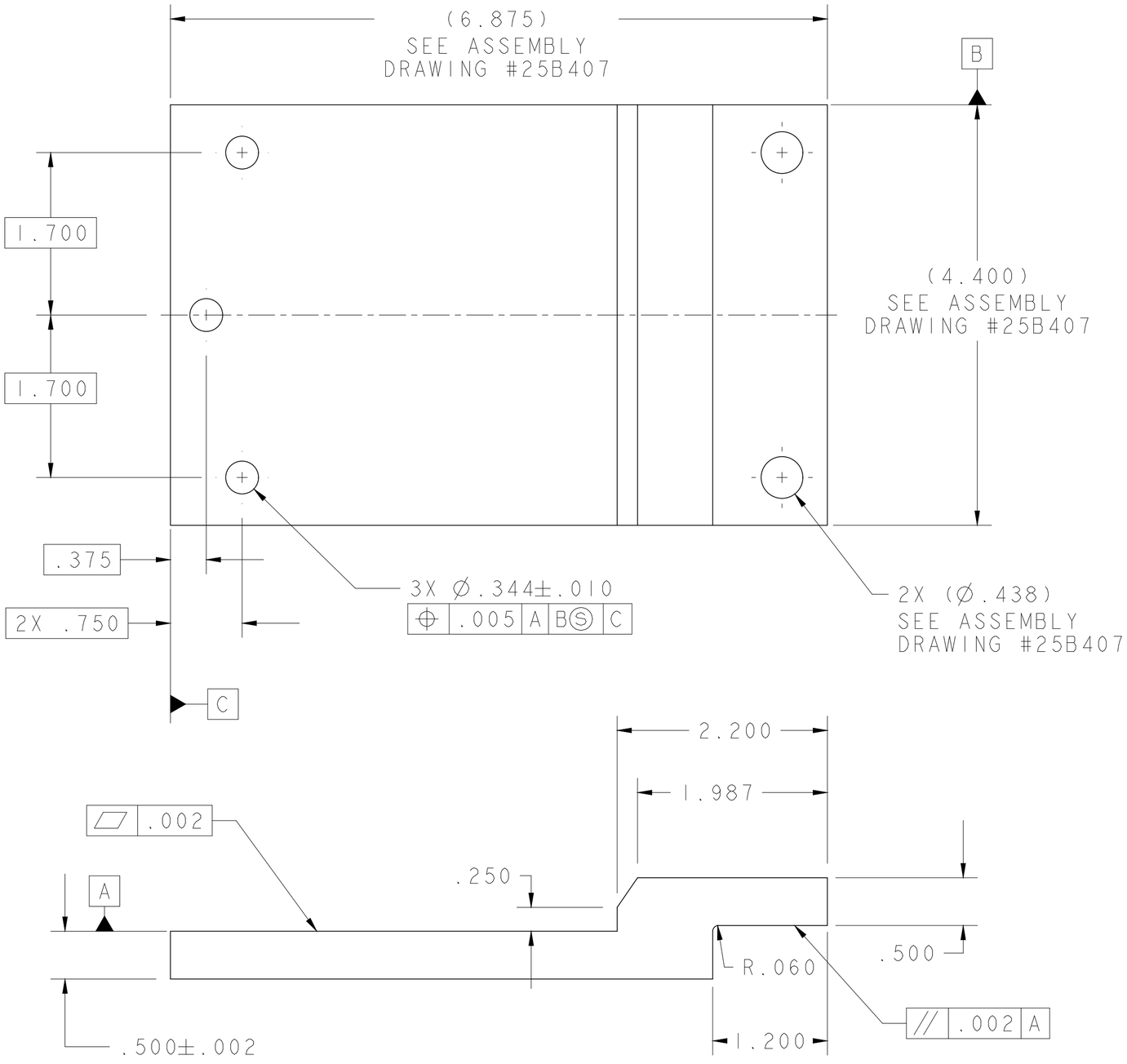

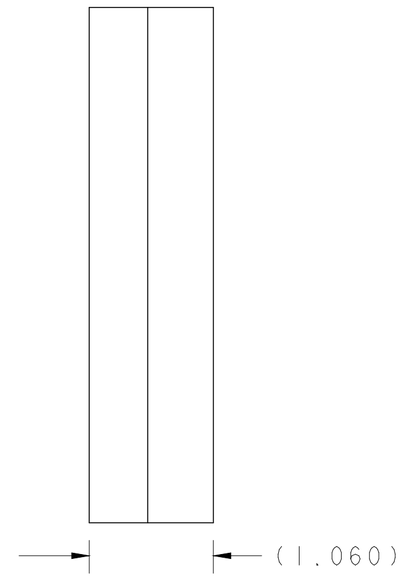

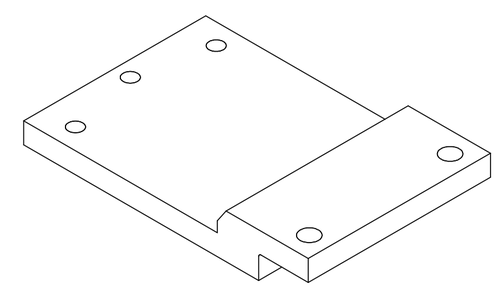

SCALE 1/2

-	304 SS	-
DESCRIPTION	MATERIAL	MAT. LOCATION

REV	DWG	CHK	ZONE	DATE	CHANGES

UNLESS OTHERWISE SPECIFIED
PROJECTION:

TOLERANCES	
X.X ± 0.1	FRAC. ± 1/64
X.XX ± 0.03	Angles ± 1.0°
X.XXX ± 0.010	FINISH 125

DO NOT SCALE PRINT

THREADS ARE CLASS 2
CHAMFER ENDS OF ALL SCREW TREADS 30°
CUT ROUND, 1.5 THREAD RELIEF ON MACHINED THREADS
BREAK EDGES .016 MAX. ON MACHINED WORK
REMOVE BURRS, WELD SPLATTER & LOOSE SCALE
IN ACCORDANCE WITH ASME Y14.5M & B46.1

SHOP ORDERS

SER NO.	-		
ACCT NO.		NO. REQD	DATE ISSD -
DEL TO			DATE REQD -
SURFACE TREATMT	-		
IDENT METHOD	TAG		
PROJECT NUMBER	na		
PROJECT NAME	N/A		
DWG BY	Allan DeMello	DATE	02-Jan-01
CHK BY	D. Oshatz	DATE	
APR BY	D. Oshatz	DATE	

ERNEST ORLANDO LAWRENCE
BERKELEY NATIONAL LABORATORY
UNIVERSITY OF CALIFORNIA - BERKELEY

SNS - FES MEBT
CHOPPER TARGET
VACUUM CHAMBER - MOUNTING PLATE

MICROFILMED:	DWG. TYPE	SHOWN ON	SCALE: 1/1	DO NOT SCALE PRINTS
	PART	25B400	SHEET 1 OF 1	
PATENT CLEAR:	DESIGN ACCT. NO.	CATEGORY CODE	DWG. NO.	SIZE / REV.
	-	FE3312	25B4063	A

Dwg. File: 25B406 Model File: 25B406

Rev. 1/29/2009 JL Oshatz

DWG. NO. 25B4063 SIZE A REV. SH. 1

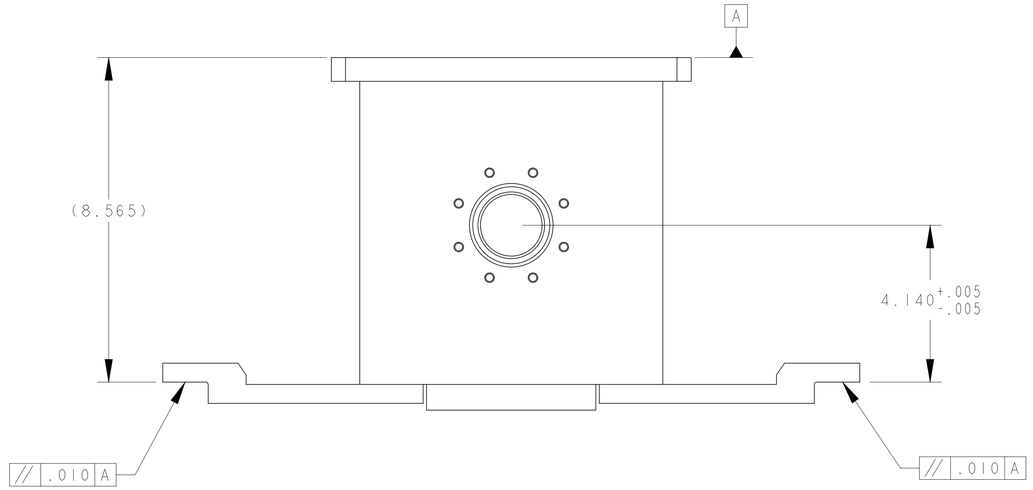

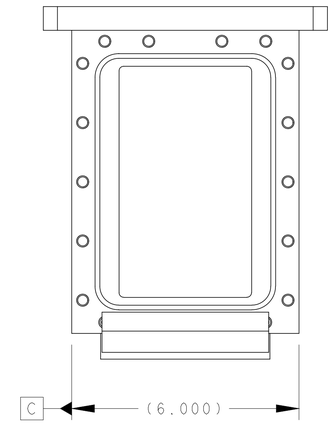

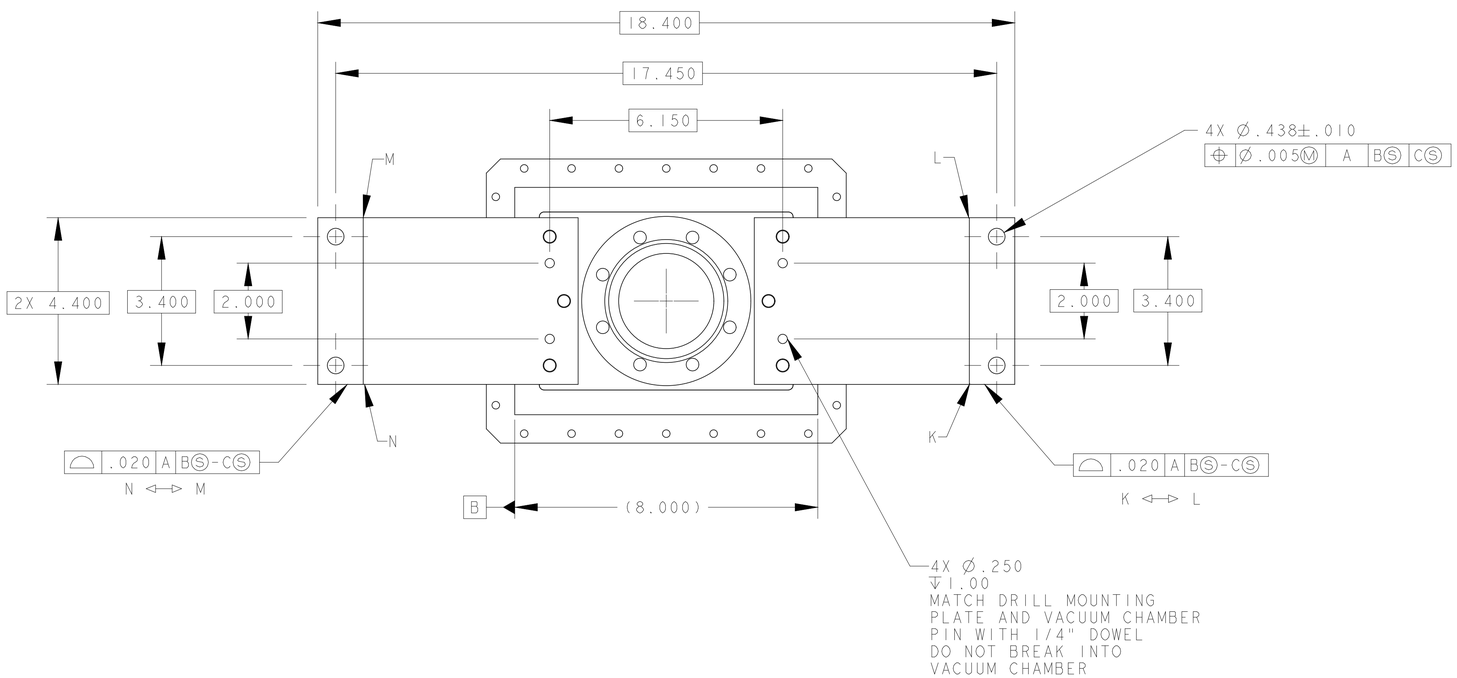

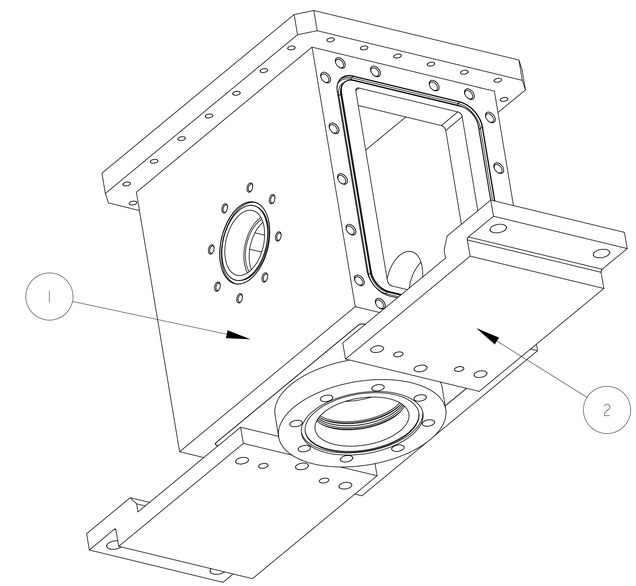

ITEM	PART NO	REQD	DESCRIPTION	MATERIAL
2	25B406	2	VACUUM CHAMBER - MOUNTING PLATE	304 SS
1	25B405	1	VACUUM CHAMBER WELDMENT	304 SS

REV	DWG	CHK	ZONE	DATE	CHANGES

UNLESS OTHERWISE SPECIFIED
PROJECTION: ⌖ ⊖
TOLERANCES: X.X ± 0.1 FRAC. ± 1/64; X.XX ± 0.03 Angles ± 1.0°; X.XXX ± 0.010 FINISH 125√
DO NOT SCALE PRINT
THREADS ARE CLASS 2
CHAMFER ENDS OF ALL SCREW TREADS 30°
CUT ROUND, 1.5 THREAD RELIEF ON MACHINED THREADS
BREAK EDGES .016 MAX. ON MACHINED WORK
REMOVE BURRS, WELD SPLATTER & LOOSE SCALE
IN ACCORDANCE WITH ASME Y14.5M & B46.1

SHOP ORDERS
ACCT NO. / NO. REQD / DATE ISSD -
DEL TO / DATE REQD -
SER NO. -
SURFACE TREATMT -
IDENT METHOD TAG
PROJECT NUMBER na
PROJECT NAME N/A
DWG BY Allan DeMello DATE 21-Dec-00
CHK BY D. Oshatz DATE
APR BY D. Oshatz DATE

ERNEST ORLANDO LAWRENCE BERKELEY NATIONAL LABORATORY
UNIVERSITY OF CALIFORNIA - BERKELEY

SNS - FES MEBT
CHOPPER TARGET
VACUUM CHAMBER LOWER ASSEMBLY

MICROFILMED:
PATENT CLEAR:
DWG. TYPE: ASSEM
SHOWN ON: 25B400
DESIGN ACCT. NO.: -
CATEGORY CODE: FE3312
SCALE: 1/2
DO NOT SCALE PRINTS
SHEET 1 OF 1
DWG. NO. 25B4074 SIZE A REV.

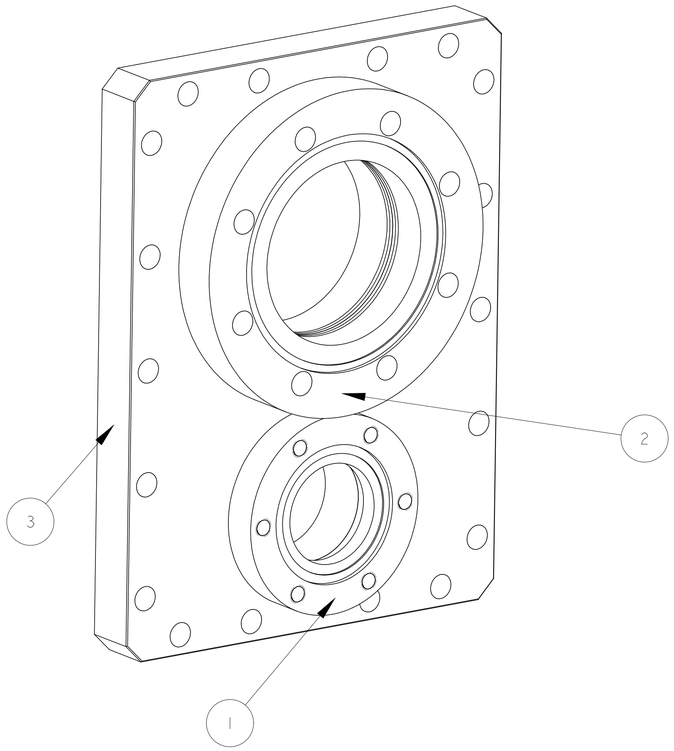

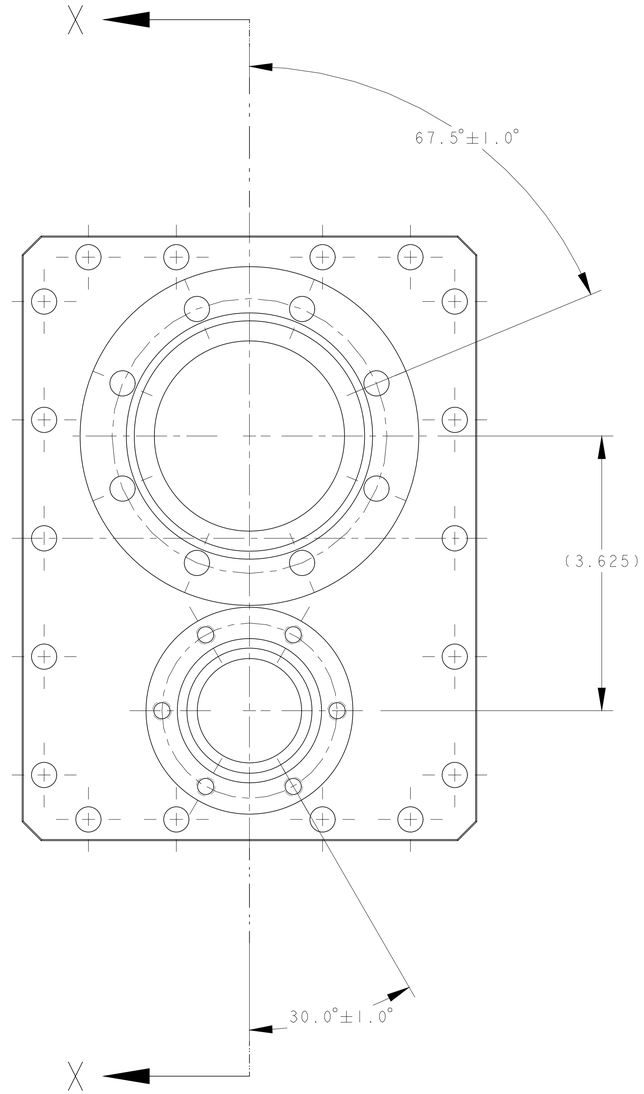

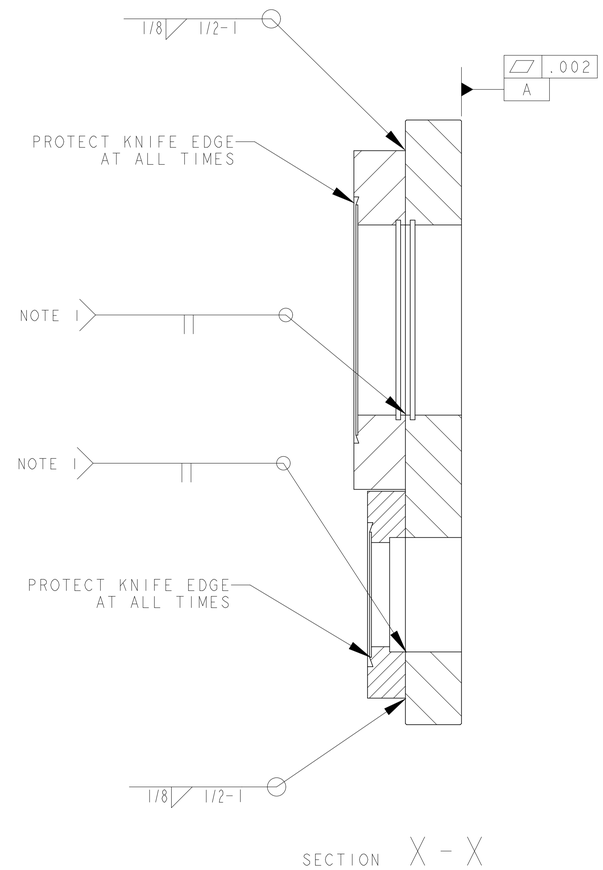

NOTES:

1. FINISHED PART TO BE VACUUM TIGHT.
   LEAK RATE NOT TO EXCEED 1 X 10^-8 TORR - LITERS PER SECOND HELIUM.
2. ULTRA-HIGH VACUUM CLEANING AND PACKING REQUIRED.
3. ASSEMBLE IN CLEAN ENVIRONMENT.
   AFTER ASSEMBLY AND WELDING, WRAP TO MAINTAIN CLEANLINESS.
4. PROTECT CONFLAT FLANGE KNIFE EDGE AT ALL TIMES.

ITEM	PART NO	REQD	DESCRIPTION	MATERIAL
3	25B409	1	VACUUM CHAMBER - VIEW PORT FLANGE	304 SS
2	25B404	1	VIEWPORT, 4.5" CONFLAT FLANGE	304 SS
1		1	2 3/4" VIEWPORT - MDC 130014 OR EQUIV.	304 SS

REV	DWG	CHK	ZONE	DATE	CHANGES

UNLESS OTHERWISE SPECIFIED
PROJECTION:

TOLERANCES		
	X.X ± 0.1	FRAC. ± 1/64
	X.XX ± 0.03	Angles ± 1.0°
	X.XXX ± 0.010	FINISH 125

DO NOT SCALE PRINT

THREADS ARE CLASS 2
CHAMFER ENDS OF ALL SCREW TREADS 30°
CUT ROUND, 1.5 THREAD RELIEF ON MACHINED THREADS
BREAK EDGES .016 MAX. ON MACHINED WORK
REMOVE BURRS, WELD SPLATTER & LOOSE SCALE
IN ACCORDANCE WITH ASME Y14.5M & B46.1

SHOP ORDERS

ACCT NO.	NO. REQD 2	SER NO.	-
DEL TO		DATE ISSD	-
		DATE REQD	-
SURFACE TREATMT	-		
IDENT METHOD	TAG		
PROJECT NUMBER	na		
PROJECT NAME	N/A		
DWG BY	Allan Demello	DATE	04-Dec-00
CHK BY	D. Oshatz	DATE	
APR BY	D. Oshatz	DATE	

ERNEST ORLANDO LAWRENCE
BERKELEY NATIONAL LABORATORY
UNIVERSITY OF CALIFORNIA - BERKELEY

SNS - FES MEBT
CHOPPER TARGET
VIEW PORT FLANGE WELDMENT

MICROFILMED:	DWG. TYPE	SHOWN ON	SCALE: 1/1	DO NOT SCALE PRINTS
	ASSEM	25B400	SHEET 1 OF 1	
PATENT CLEAR:	DESIGN ACCT. NO.	CATEGORY CODE	DWG. NO.	SIZE / REV.
	-	FE3312	25B4084	A

Dwg__FILE: CDRFM_Model_FILE__FORMAT

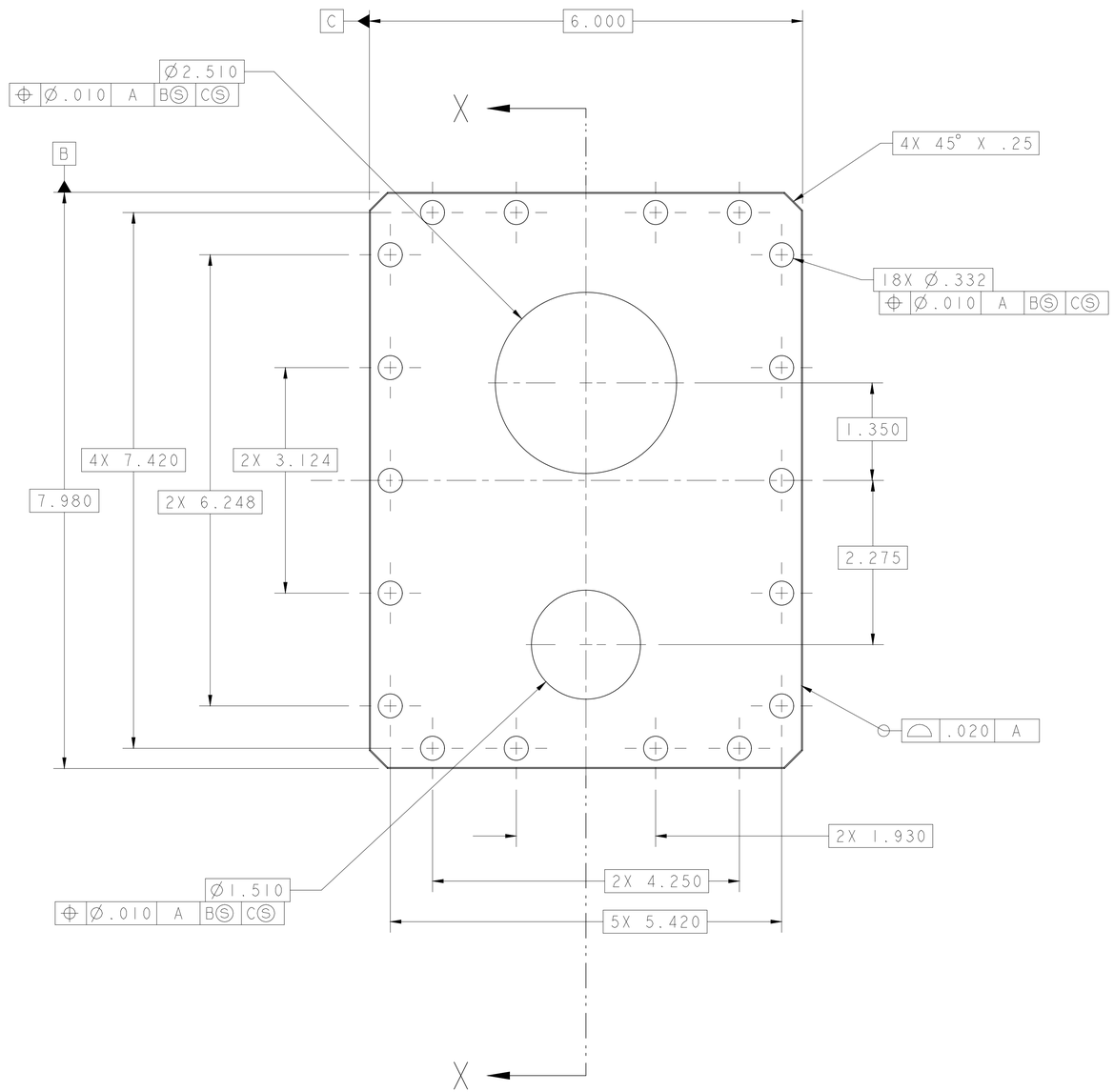

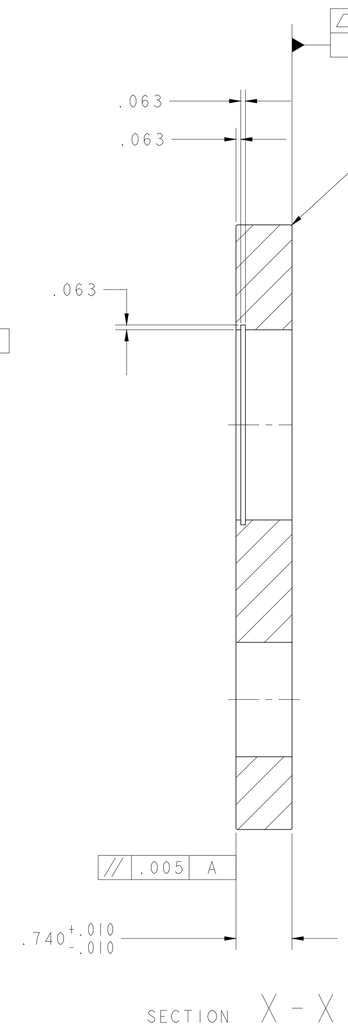

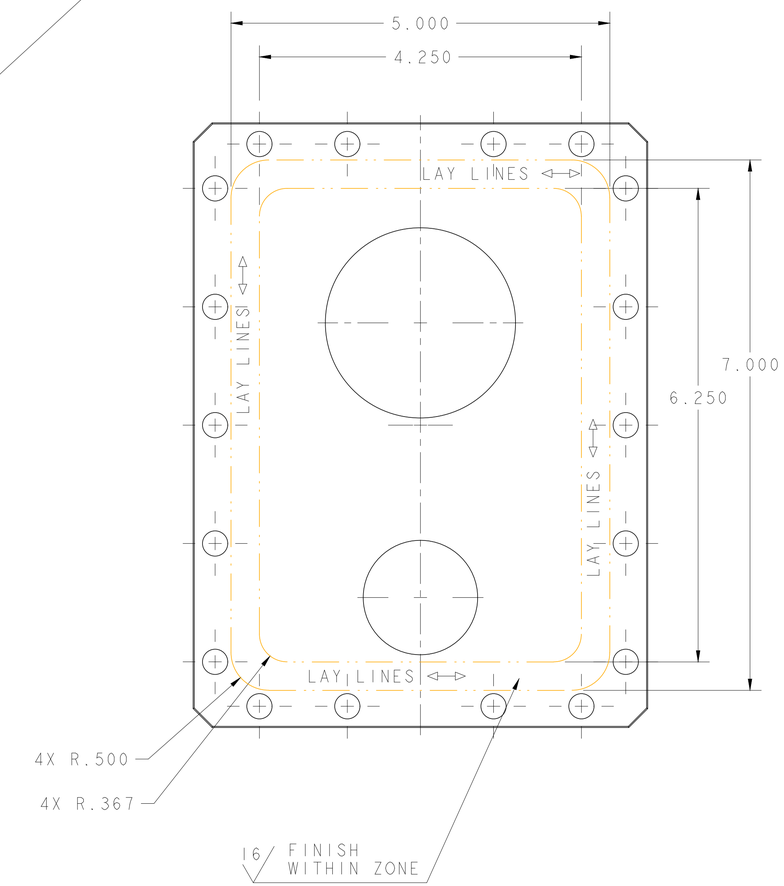

B3			C1	1/16/01	ADD DOUBLE ARROW TO LAYOUT NOTE
B2			C1	1/16/01	CHANGE 6.375 TO 6.250
B1			D2	1/16/01	CHANGE 4.375 TO 4.250
A				1/04/01	RELEASE FOR QUOTE
REV	DWG	CHK	ZONE	DATE	CHANGES

UNLESS OTHERWISE SPECIFIED
PROJECTION:
TOLERANCES: X.X ± 0.1 FRAC. ± 1/64; X.XX ± 0.03 Angles ± 1.0°; X.XXX ± 0.010 FINISH 125
DO NOT SCALE PRINT
THREADS ARE CLASS 2
CHAMFER ENDS OF ALL SCREW THREADS 30°
CUT ROUND, 1.5 THREAD RELIEF ON MACHINED THREADS
BREAK EDGES .016 MAX. ON MACHINED WORK
REMOVE BURRS, WELD SPLATTER & LOOSE SCALE
IN ACCORDANCE WITH ASME Y14.5M & B46.1

SHOP ORDERS
ACCT NO. | NO. REQD | SER NO. -
DEL TO | DATE ISSD -
SURFACE TREATMT - | DATE REQD -
IDENT METHOD TAG
PROJECT NUMBER na
PROJECT NAME N/A
DWG BY Allan DeMello | DATE 22-Jan-01
CHK BY D.Oshatz | DATE
APR BY D.Oshatz | DATE

DESCRIPTION	MATERIAL	MAT. LOCATION
-	304 SS	-

ERNEST ORLANDO LAWRENCE BERKELEY NATIONAL LABORATORY
UNIVERSITY OF CALIFORNIA - BERKELEY

SNS - FES MEBT
CHOPPER TARGET
VACUUM CHAMBER - VIEW PORT FLANGE

MICROFILMED: | DWG. TYPE PART | SHOWN ON 25B408 | SCALE: 1/1 | DO NOT SCALE PRINTS
SHEET 1 OF 1
PATENT CLEAR: | DESIGN ACCT. NO. - | CATEGORY CODE FE3312 | DWG. NO. 25B4094 | SIZE B | REV.

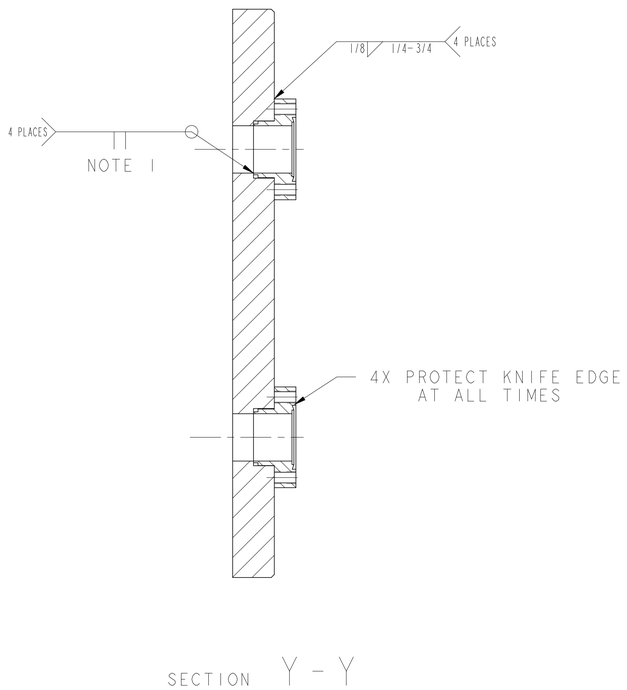

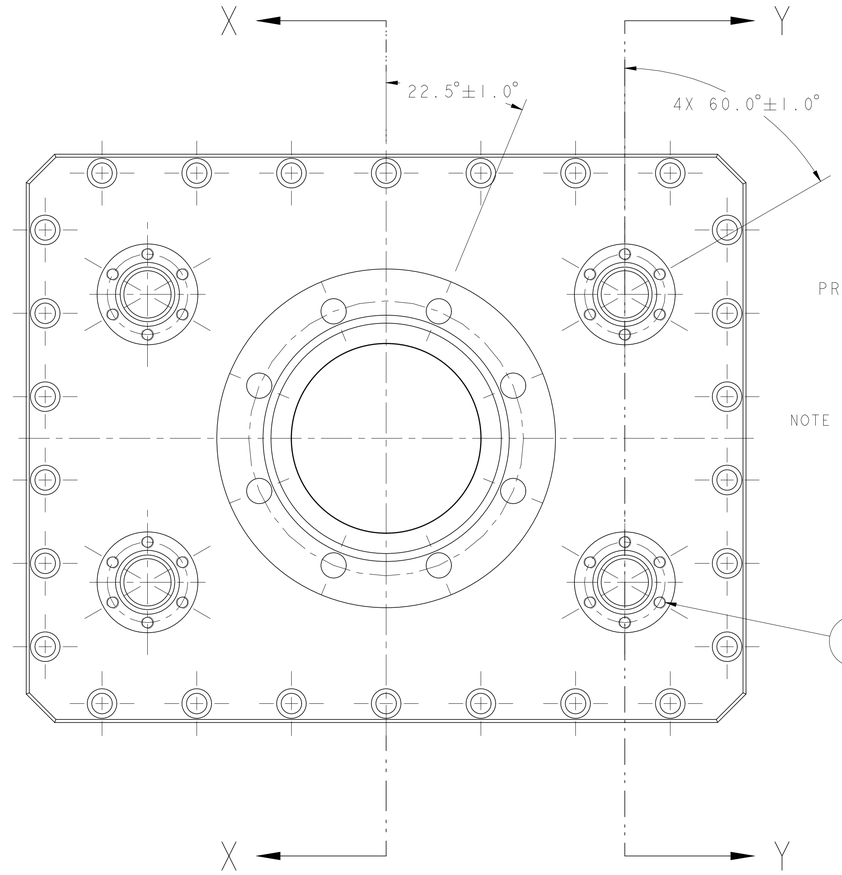

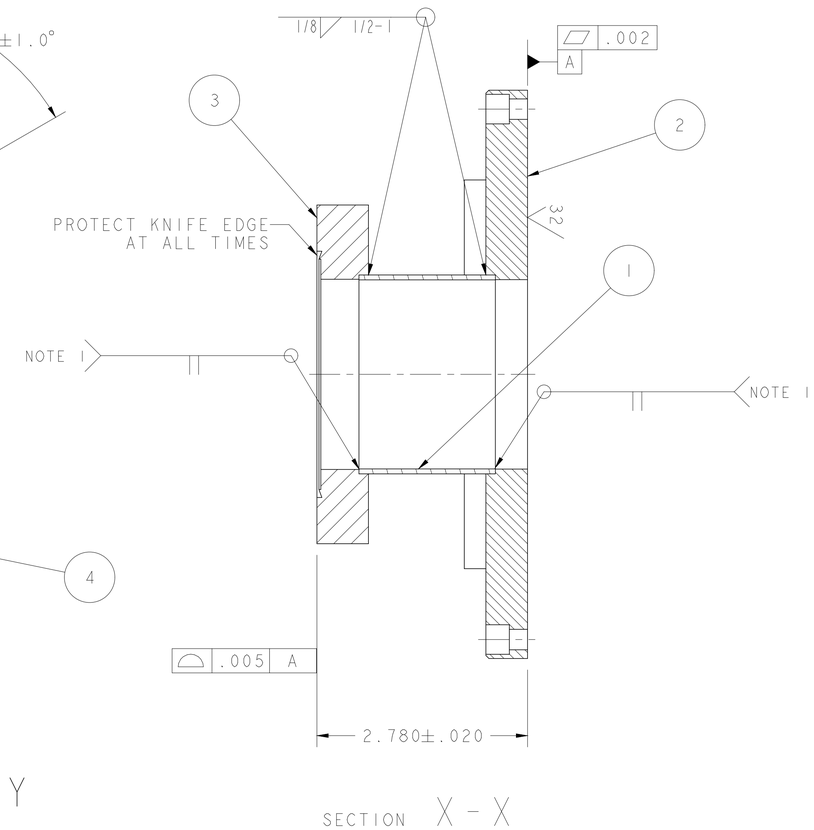

NOTES:

1. FINISHED PART TO BE VACUUM TIGHT.
   LEAK RATE NOT TO EXCEED 1 X 10^-8 TORR - LITERS PER SECOND HELIUM.
2. ULTRA-HIGH VACUUM CLEANING AND PACKING REQUIRED.
3. ASSEMBLE IN CLEAN ENVIRONMENT.
   AFTER ASSEMBLY AND WELDING, WRAP TO MAINTAIN CLEANLINESS.
4. PROTECT CONFLAT FLANGE KNIFE EDGE AT ALL TIMES.

ITEM	PART NO	REQD	DESCRIPTION	MATERIAL
4	MDC F133075T	4	MINI-CONFLAT FLANGE	304 SS
3	25B412	1	TARGET FEEDTHRU PORT - CONFLAT FLANGE	304 SS
2	25B411	1	VACUUM CHAMBER - TARGET ACTUATOR FLANGE	304 SS
1	-	1	TARGET FEEDTHRU PORT - TUBE, 2.625 OD X .065 WALL	304 SS

REV	DWG	CHK	ZONE	DATE	CHANGES

UNLESS OTHERWISE SPECIFIED
PROJECTION:

TOLERANCES		
	X.X ± 0.1	FRAC. ± 1/64
	X.XX ± 0.03	Angles ± 1.0°
	X.XXX ± 0.010	FINISH 125

DO NOT SCALE PRINT

THREADS ARE CLASS 2
CHAMFER ENDS OF ALL SCREW TREADS 30°
CUT ROUND, 1.5 THREAD RELIEF ON MACHINED THREADS
BREAK EDGES .016 MAX. ON MACHINED WORK
REMOVE BURRS, WELD SPLATTER & LOOSE SCALE
IN ACCORDANCE WITH ASME Y14.5M & B46.1

SHOP ORDERS

ACCT NO.	NO. REQD	DATE ISSD	
DEL TO		DATE REQD	
SURFACE TREATMT	-		
IDENT METHOD	TAG		
PROJECT NUMBER	na		
PROJECT NAME	N/A		
DWG BY	Allan DeMello	DATE	05-Dec-00
CHK BY	D. Oshatz	DATE	
APR BY	D. Oshatz	DATE	

SER NO. -

ERNEST ORLANDO LAWRENCE
BERKELEY NATIONAL LABORATORY
UNIVERSITY OF CALIFORNIA - BERKELEY

SNS - FES MEBT
CHOPPER TARGET
VACUUM CHAMBER - TARGET ACTUATOR FLANGE WELDMENT

MICROFILMED:	DWG. TYPE	SHOWN ON	SCALE: 1/1	DO NOT SCALE PRINTS
	ASSEM	25B400	SHEET 1 OF 1	
PATENT CLEAR:	DESIGN ACCT. NO.	CATEGORY CODE	DWG. NO.	SIZE / REV.
	-	FE3312	25B4104	A

Dwg. File: 25B4104_Model_File: 25B400

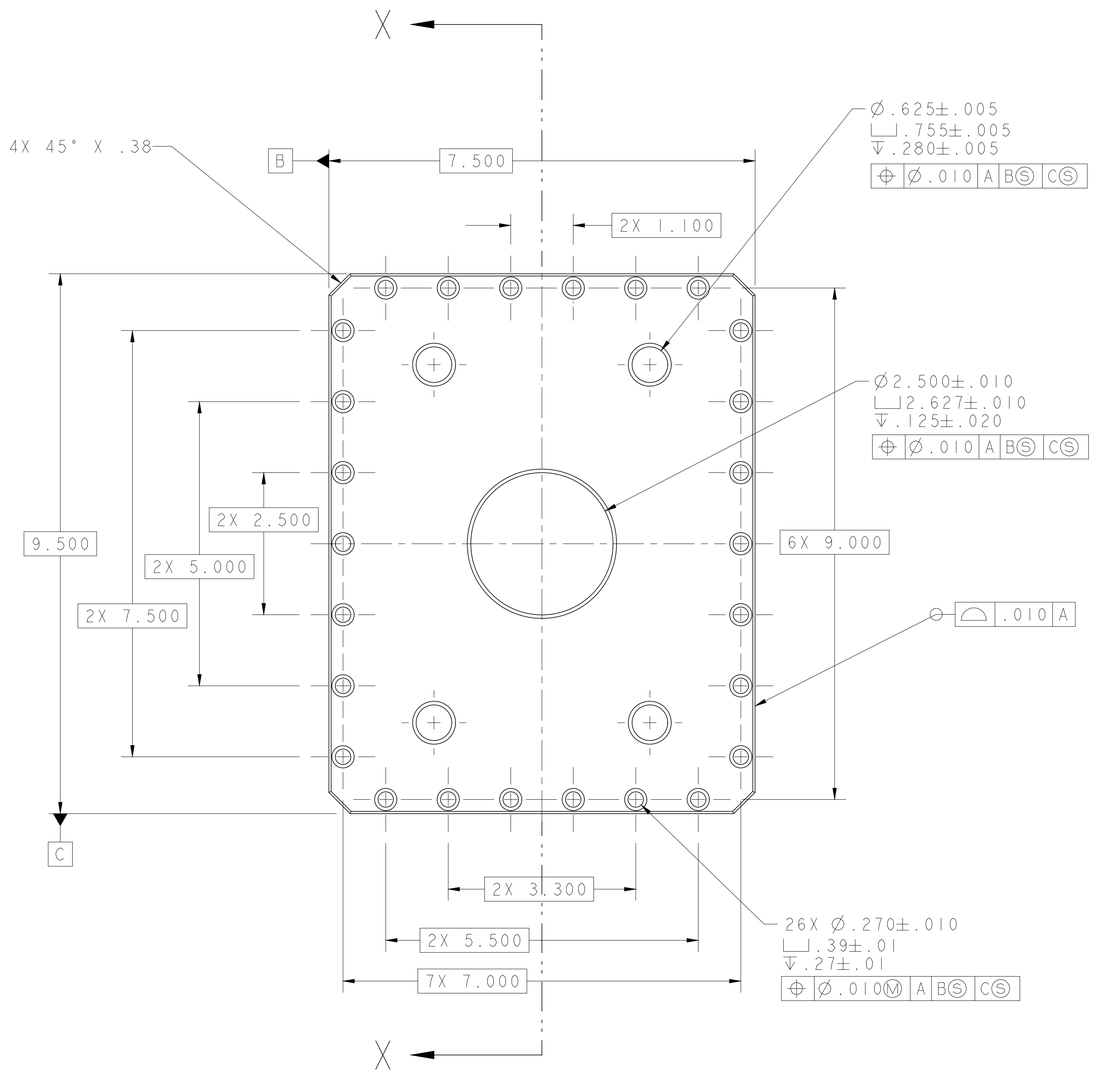

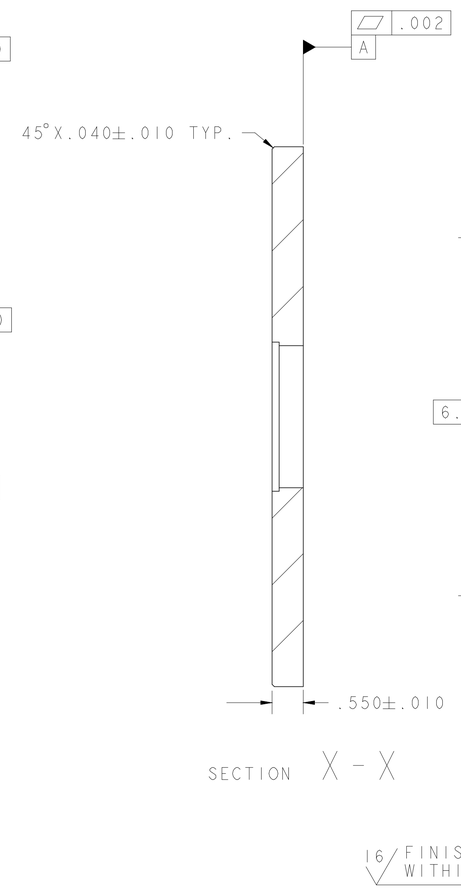

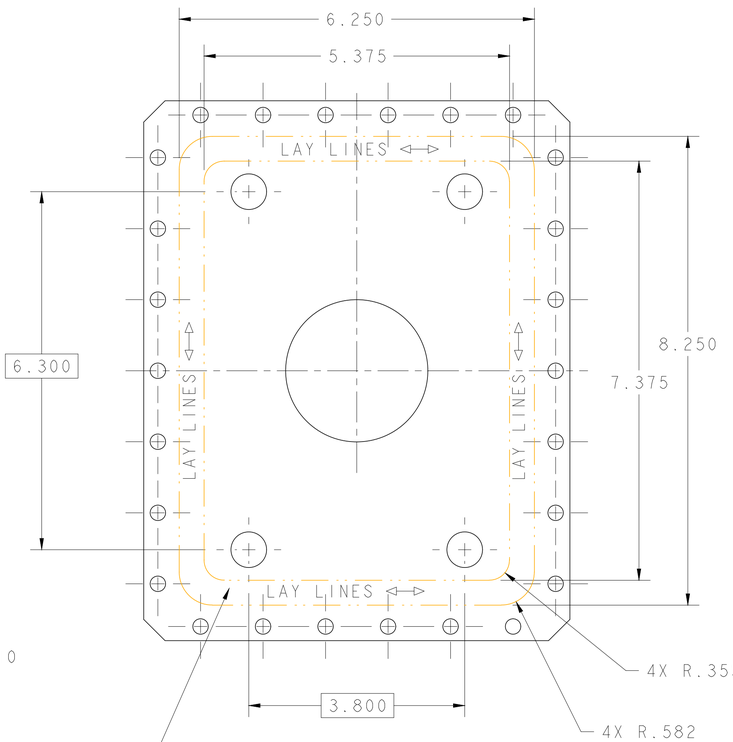

DESCRIPTION	MATERIAL	MAT. LOCATION
-	304 SS	-

REV	DWG	CHK	ZONE	DATE	CHANGES
B3			C1	1/16/01	ADD DOUBLE ARROWS TO LAYLINE NOTE
B2			C1	1/16/01	CHANGE 8.125 TO 8.250
B1			D2	1/16/01	CHANGE 6.125 TO 6.250
A				1/04/01	RELEASE FOR QUOTE

UNLESS OTHERWISE SPECIFIED

PROJECTION:

TOLERANCES: X.X ± 0.1 FRAC. ± 1/64; X.XX ± 0.03 Angles ± 1.0°; X.XXX ± 0.010 FINISH 125

DO NOT SCALE PRINT

THREADS ARE CLASS 2
CHAMFER ENDS OF ALL SCREW TREADS 30°
CUT ROUND, 1.5 THREAD RELIEF ON MACHINED THREADS
BREAK EDGES .016 MAX. ON MACHINED WORK
REMOVE BURRS, WELD SPLATTER & LOOSE SCALE
IN ACCORDANCE WITH ASME Y14.5M & B46.1

SHOP ORDERS

ACCT NO.	NO. REQD	SER NO.	-
		DATE ISSD	-
DEL ID		DATE REQD	-
SURFACE TREATMT	-		
IDENT METHOD	TAG		
PROJECT NUMBER	na		
PROJECT NAME	N/A		
DWG BY	Allan DeMello	DATE	13-Dec-00
CHK BY	D. Oshatz	DATE	
APR BY	D. Oshatz	DATE	

ERNEST ORLANDO LAWRENCE BERKELEY NATIONAL LABORATORY
UNIVERSITY OF CALIFORNIA - BERKELEY

SNS - FES MEBT
CHOPPER TARGET
VACUUM CHAMBER - TARGET ACTUATOR FLANGE

MICROFILMED:	DWG. TYPE	SHOWN ON	SCALE: 3/4	DO NOT SCALE PRINTS
	PART	25B410	SHEET 1 OF 1	
PATENT CLEAR:	DESIGN ACCT. NO. -	CATEGORY CODE FE3312	DWG. NO. 25B4114	SIZE / REV. B

Dwg. File: 25B411_Model_File: FRONT

DWG. NO.	SIZE	REV.	SH.
25B4122	A	1	

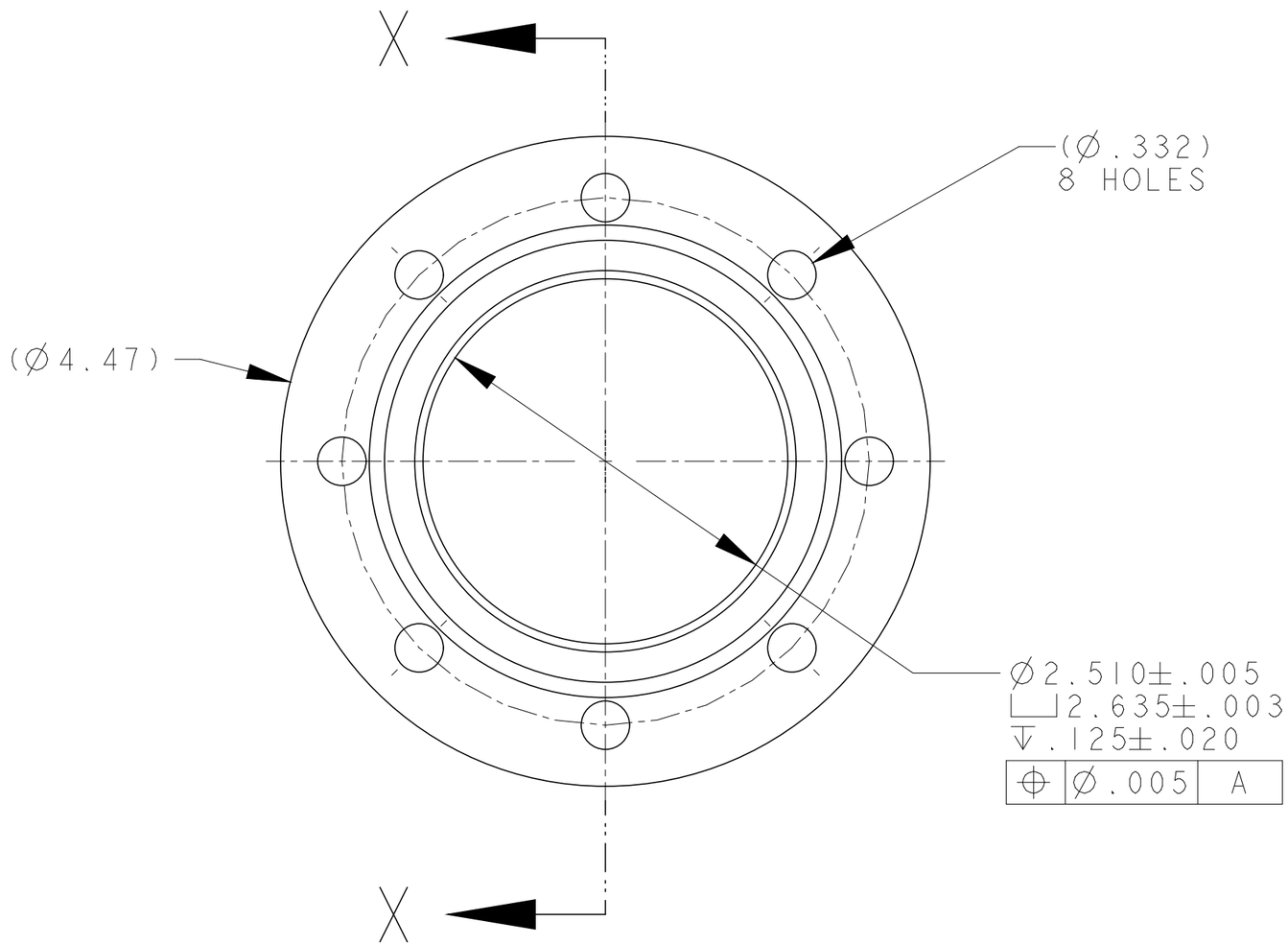

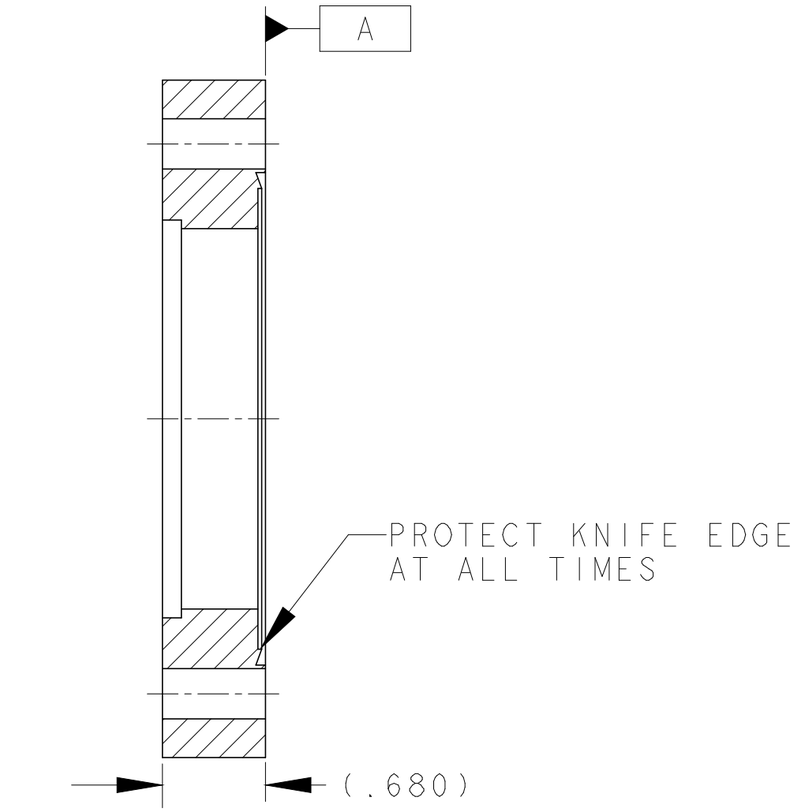

SECTION X - X

DESCRIPTION	MATERIAL	MAT. LOCATION
MDC PN 110021 OR EQUIV.	304 SS	-

REV	DWG	CHK	ZONE	DATE	CHANGES
A					RELEASE FOR QUOTE

UNLESS OTHERWISE SPECIFIED

PROJECTION:

TOLERANCES		
	X.X ± 0.1	FRAC. ± 1/64
	X.XX ± 0.03	Angles ± 0.5°
	X.XXX ± 0.010	FINISH 125

DO NOT SCALE PRINT

THREADS ARE CLASS 2
CHAMFER ENDS OF ALL SCREW TREADS 30°
CUT ROUND, 1.5 THREAD RELIEF ON MACHINED THREADS
BREAK EDGES .016 MAX. ON MACHINED WORK
REMOVE BURRS, WELD SPLATTER & LOOSE SCALE
IN ACCORDANCE WITH ASME Y14.5M & B46.1

SHOP ORDERS

ACCT NO.	NO. REQD 1	SER NO.	-
DEL TO		DATE ISSD	-
SURFACE TREATMT		DATE REQD	-
IDENT METHOD	TAG		
PROJECT NUMBER			
PROJECT NAME	-		
DWG BY	Allan DeMello	DATE	05-Dec-00
CHK BY	D. Oshatz	DATE	
APR BY	D. Oshatz	DATE	

ERNEST ORLANDO LAWRENCE BERKELEY NATIONAL LABORATORY
UNIVERSITY OF CALIFORNIA - BERKELEY

SNS - FES MEBT
CHOPPER TARGET
TARGET FEEDTHRU PORT - CONFLAT FLANGE

MICROFILMED:	DWG. TYPE	SHOWN ON	SCALE: 1/1	DO NOT SCALE PRINTS
	PART	25B4104	SHEET 1 OF 1	
PATENT CLEAR:	DESIGN ACCT. NO.	CATEGORY CODE	DWG. NO.	SIZE / REV.
	-	FE3312	25B4122	A

Rev. 1/29/2000 J. R. Osborn

Dwg. File: 25B412 Model File: 25B412

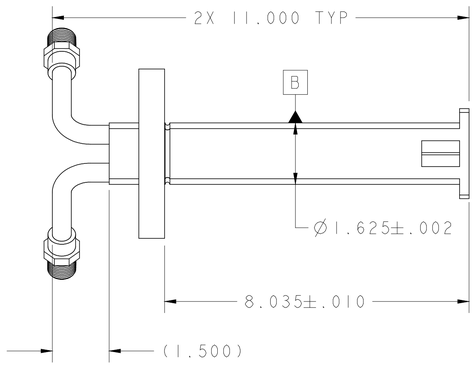

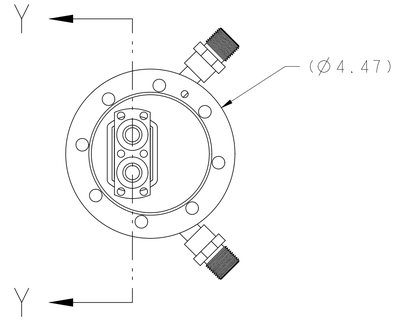

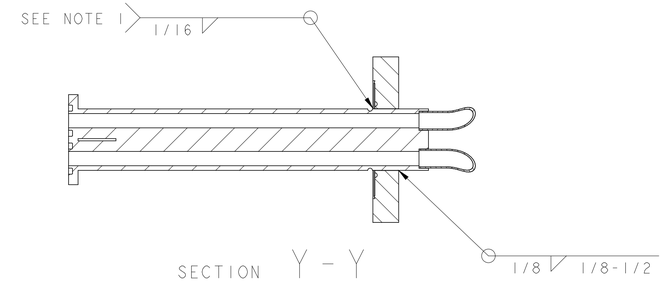

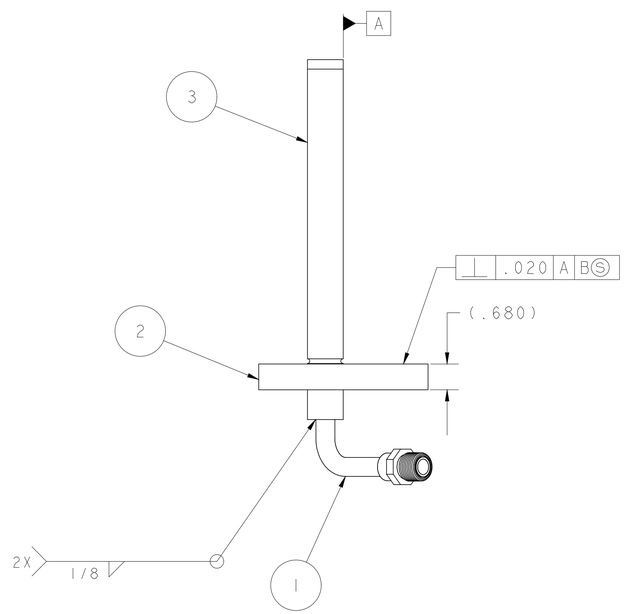

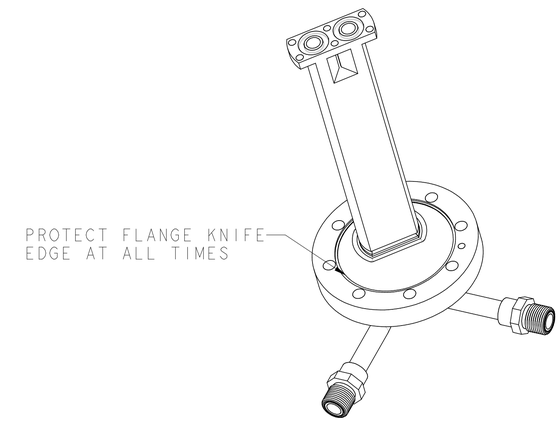

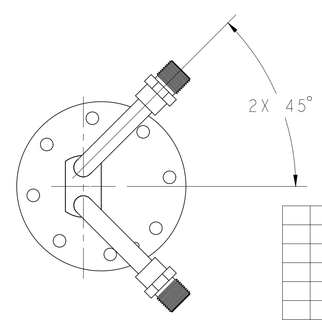

NOTES:

1. FINISHED PART TO BE VACUUM TIGHT.
   LEAK RATE NOT TO EXCEED 1 X 10^-8 TORR - LITERS PER SECOND HELIUM.
2. ULTRA-HIGH VACUUM CLEANING AND PACKING REQUIRED.
3. ASSEMBLE IN CLEAN ENVIRONMENT.
   AFTER ASSEMBLY AND WELDING, WRAP TO MAINTAIN CLEANLINESS.

ITEM	PART NO	REQD	DESCRIPTION	MATERIAL
3	25B415	1	WATER MANIFOLD INLET/OUTLET TUBE	304 SS
2	25B414	1	WATER MANIFOLD CONFLAT FLANGE	304 SS
1	25B417	2	RIGHT ANGLE COOLING TUBE	-

REV	DWG	CHK	ZONE	DATE	CHANGES
B2	AD		D7	1/22/01	CHANGE DIMENSION 9.320±.010 TO 8.035±.010
B1	AD		D7	1/22/01	CHANGE DIMENSION 2X 13.250 TYP. TO 2X 11.000 TYP.
A	AD			1/04/01	RELEASE FOR QUOTE

UNLESS OTHERWISE SPECIFIED
PROJECTION:
TOLERANCES: X.X ± 0.1 FRAC. ± 1/64; X.XX ± 0.03 Angles ± 1.0°; X.XXX ± 0.010 FINISH 125
DO NOT SCALE PRINT
THREADS ARE CLASS 2
CHAMFER ENDS OF ALL SCREW TREADS 30°
CUT ROUND, 1.5 THREAD RELIEF ON MACHINED THREADS
BREAK EDGES .016 MAX. ON MACHINED WORK
REMOVE BURRS, WELD SPLATTER & LOOSE SCALE
IN ACCORDANCE WITH ASME Y14.5M & B46.1

SHOP ORDERS
ACCT NO. / NO. REQD / SER NO. -
DEL TO / DATE ISSD -
DATE REQD -
SURFACE TREATMT
IDENT METHOD TAG
PROJECT NUMBER
PROJECT NAME
DWG BY Allan DeMello DATE 22-Nov-00
CHK BY D. Oshatz DATE
APR BY D. Oshatz DATE

ERNEST ORLANDO LAWRENCE
BERKELEY NATIONAL LABORATORY
UNIVERSITY OF CALIFORNIA - BERKELEY

SNS - FES MEBT
CHOPPER TARGET
WATER MANIFOLD

MICROFILMED:
PATENT CLEAR:
DWG. TYPE: ASSEM
SHOWN ON: 25B400
SCALE: 1/2
DO NOT SCALE PRINTS
SHEET 1 OF 1
DESIGN ACCT. NO.: -
CATEGORY CODE: FE3312
DWG. NO. 25B4134 SIZE B REV. B

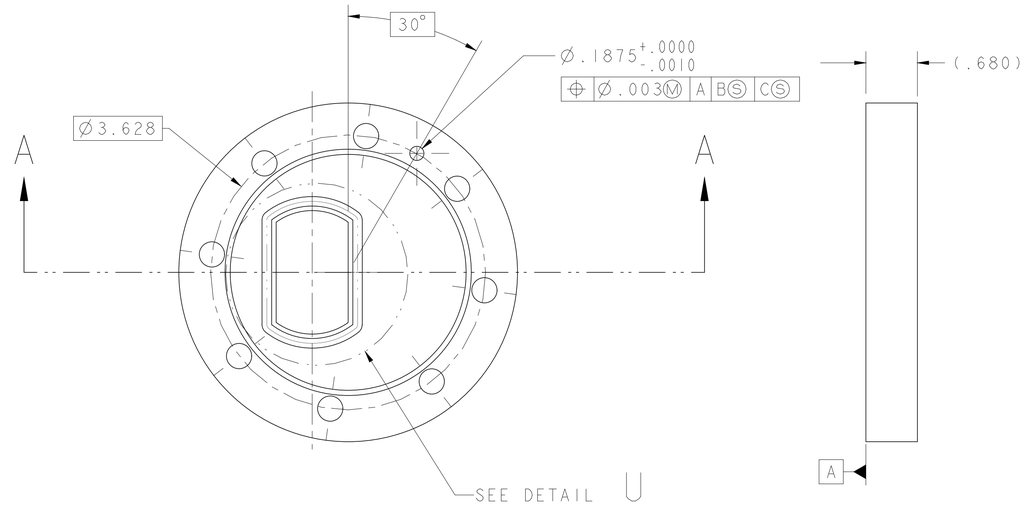

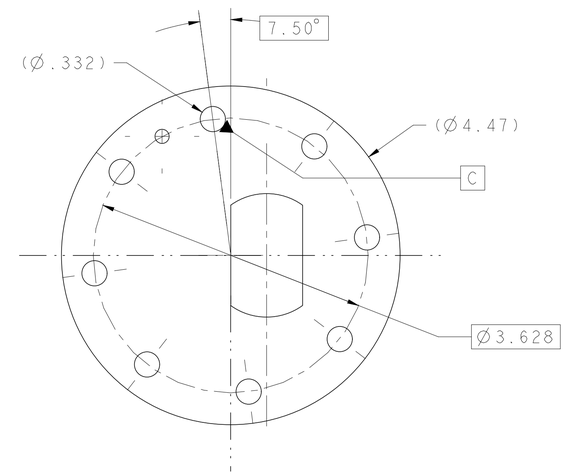

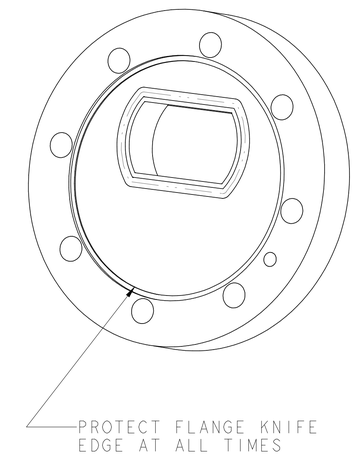

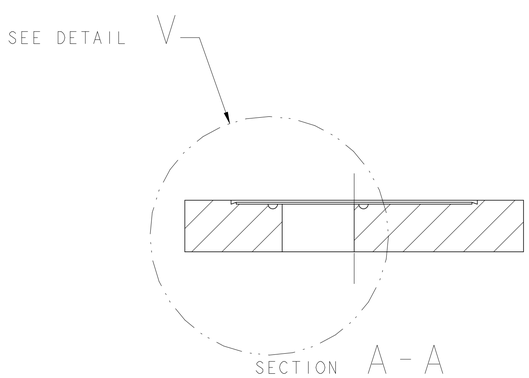

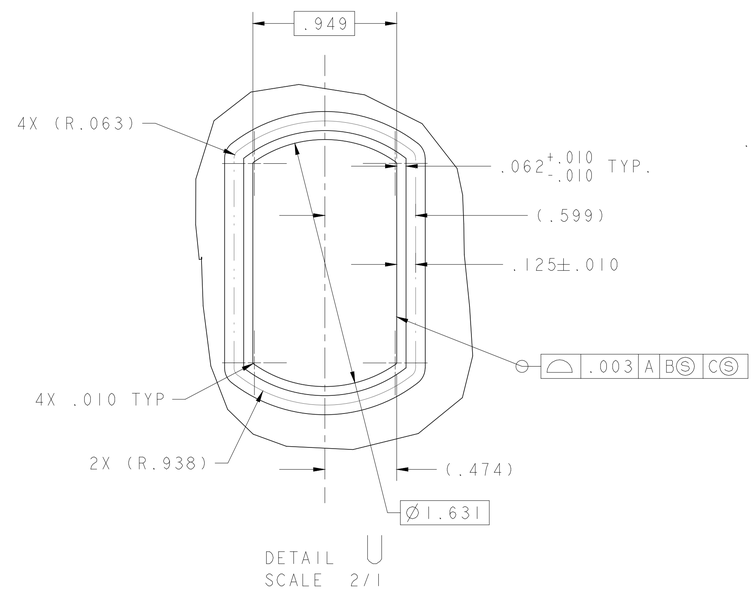

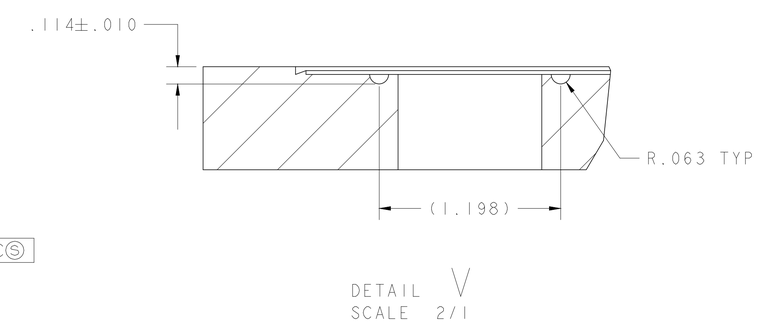

REV	DWG	CHK	ZONE	DATE	CHANGES

UNLESS OTHERWISE SPECIFIED
PROJECTION:

TOLERANCES		
	X.X ± 0.1	FRAC. ± 1/64
	X.XX ± 0.03	Angles ± 1.0°
	X.XXX ± 0.010	FINISH 125

DO NOT SCALE PRINT

THREADS ARE CLASS 2
CHAMFER ENDS OF ALL SCREW TREADS 30°
CUT ROUND, 1.5 THREAD RELIEF ON MACHINED THREADS
BREAK EDGES .016 MAX. ON MACHINED WORK
REMOVE BURRS, WELD SPLATTER & LOOSE SCALE
IN ACCORDANCE WITH ASME Y14.5M & B46.1

DESCRIPTION	MATERIAL	MAT. LOCATION
MDC PN 110018 OR EQUIV.	304 SS	-

SHOP ORDERS

ACCT NO.	NO. REQD	SER NO.	-
DEL TO		DATE ISSD	-
		DATE REQD	-
SURFACE TREATMT			
IDENT METHOD	TAG		
PROJECT NUMBER	na		
PROJECT NAME			
DWG BY	Allan DeMello	DATE	15-Nov-00
CHK BY	D. Oshatz	DATE	
APR BY	D. Oshatz	DATE	

ERNEST ORLANDO LAWRENCE
BERKELEY NATIONAL LABORATORY
UNIVERSITY OF CALIFORNIA - BERKELEY

SNS - FES MEBT
CHOPPER TARGET
WATER MANIFOLD CONFLAT FLANGE

MICROFILMED:	DWG. TYPE	SHOWN ON	SCALE: 1/1
	PART	25B413	SHEET 1 OF 1
PATENT CLEAR:	DESIGN ACCT. NO.	CATEGORY CODE	DWG. NO. 25B4144 SIZE A REV.
	-	FE3312	

DO NOT SCALE PRINTS

Dwg. File: 25B4144_Model_File: 25B4144

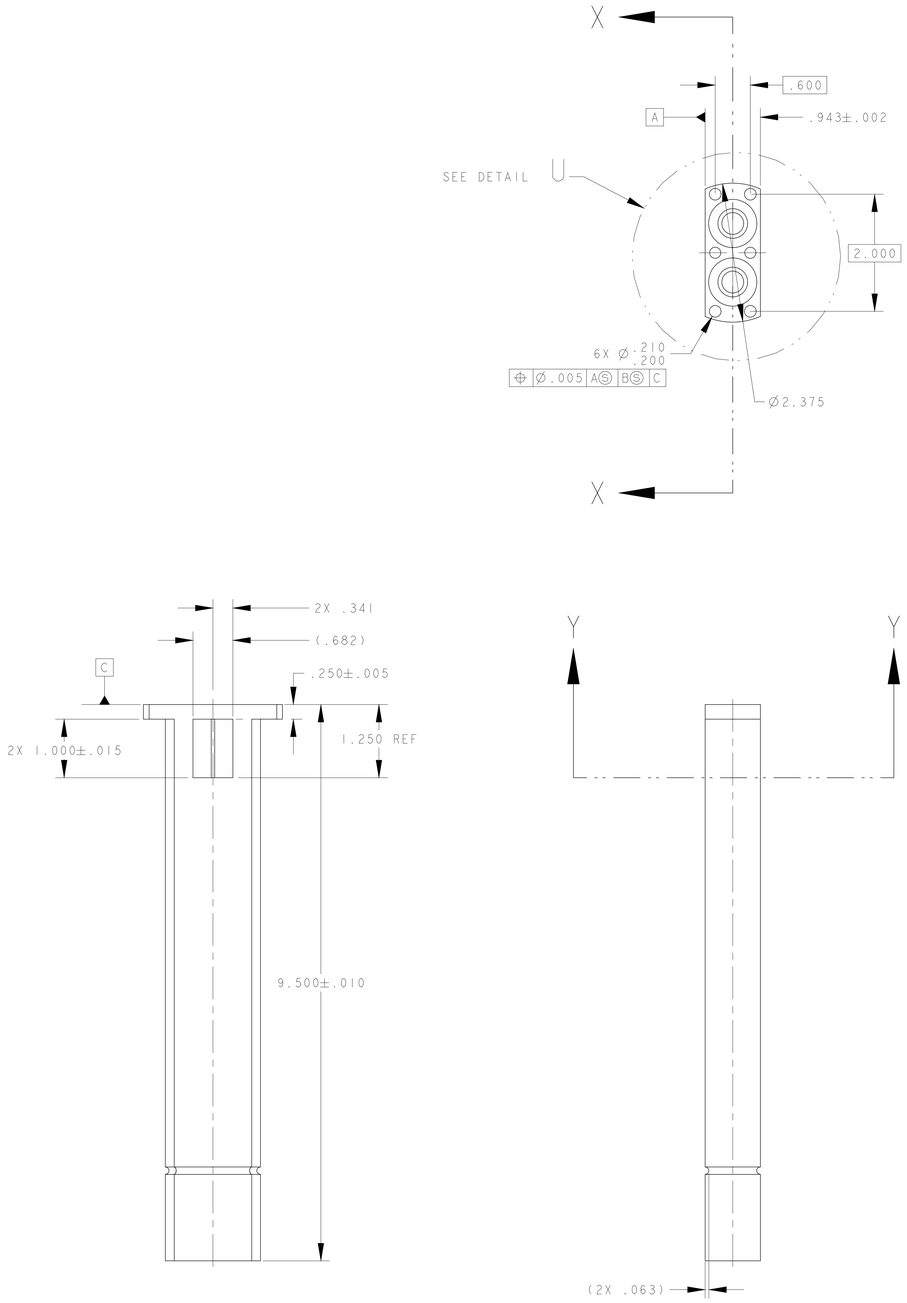

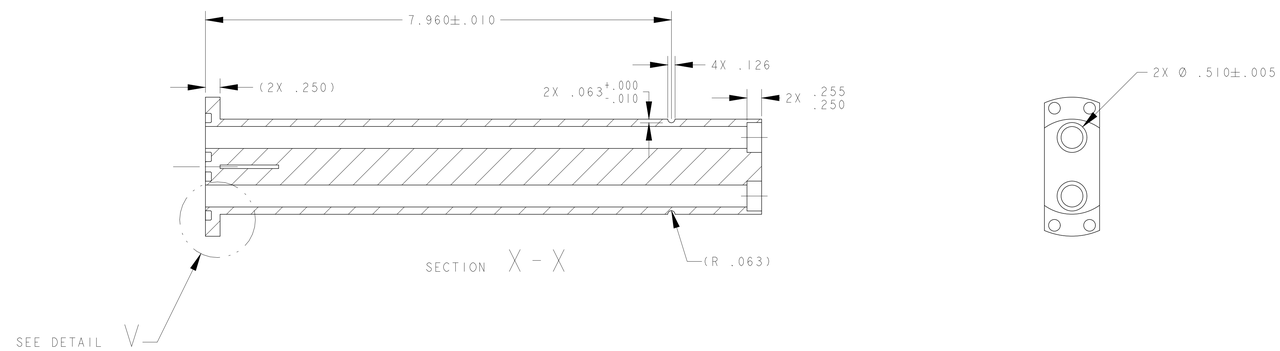

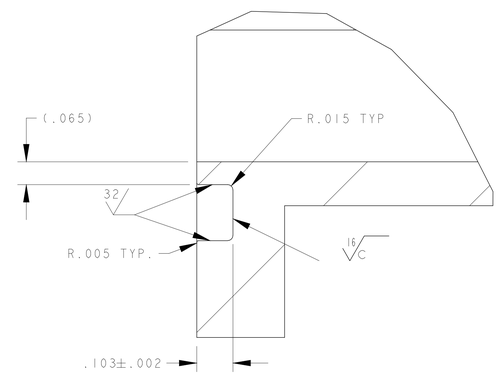

DETAIL V
SCALE 6/1

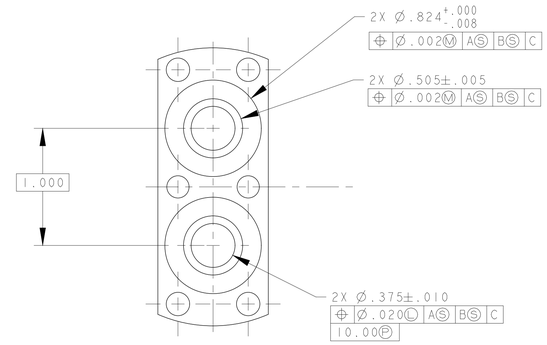

DETAIL U
SCALE 2/1

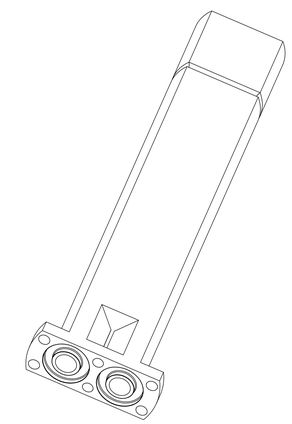

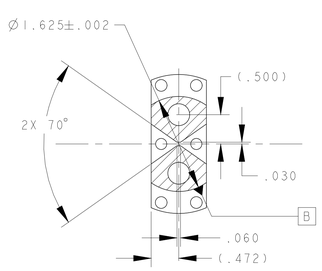

SECTION Y - Y

REV	DWG	CHK	ZONE	DATE	CHANGES
C	AD		C4	3/19/01	ADD GROOVE DEPTH DIMENSION IN DETAIL 'V'
B6	AD		D3	1/22/01	CHANGE DIMENSION .064 TO .063
B5	AD		D3	1/22/01	MOVE R .063 DIMENSION FROM UPPER RADIUS TO LOWER
B4	AD		D4	1/22/01	CHANGE DIMENSION 2X .250 TO A REFERENCE DIMENSION
B3	AD		D4	1/22/01	CHANGE DIMENSION 9.244±.020 TO 7.960±.020
B2	AD		A6	1/22/01	CHANGE DIMENSION .064 TO .063
B1	AD		B7	1/22/01	CHANGE DIMENSION 11.750±.010 TO 9.500±.010
A	AD			1/04/01	RELEASE FOR QUOTE

UNLESS OTHERWISE SPECIFIED
PROJECTION: ⊕ ⊂⊃
TOLERANCES:
X.X ± 0.1 | FRAC. ± 1/64
X.XX ± 0.03 | Angles ± 1.0°
X.XXX ± 0.010 | FINISH 125
DO NOT SCALE PRINT
THREADS ARE CLASS 2
CHAMFER ENDS OF ALL SCREW TREADS 30°
CUT ROUND, 1.5 THREAD RELIEF ON MACHINED THREADS
BREAK EDGES .016 MAX. ON MACHINED WORK
REMOVE BURRS, WELD SPLATTER & LOOSE SCALE
IN ACCORDANCE WITH ASME Y14.5M & B46.1

SHOP ORDERS
ACCT NO. | NO REQD | DATE ISSD
DEL TO | DATE REQD
SURFACE TREATMT
IDENT METHOD TAG
PROJECT NUMBER
PROJECT NAME
DWN BY Allan DeMello | DATE 22-Jan-01
CHK BY D. Oshatz | DATE
APR BY D. Oshatz | DATE

DESCRIPTION	MATERIAL	MAT. LOCATION
	304 SS	-

ERNEST ORLANDO LAWRENCE BERKELEY NATIONAL LABORATORY
UNIVERSITY OF CALIFORNIA - BERKELEY

SNS - FES MEBT
CHOPPER TARGET
WATER MANIFOLD INLET/OUTLET TUBE

MICROFILMED: | DWG. TYPE: PART | SHOWN ON: 25B413 | SCALE: 1/1 | DO NOT SCALE PRINTS
SHEET 1 OF 1
PATENT CLEAR: | DESIGN ACCT. NO.: - | CATEGORY CODE: FE3312 | DWG. NO.: 25B4156 | SIZE: B | REV.: B

DWG. NO. 25B4156 SIZE B REV. B

DWG. NO.	SIZE	REV.	SH.
25B4162	B	1	

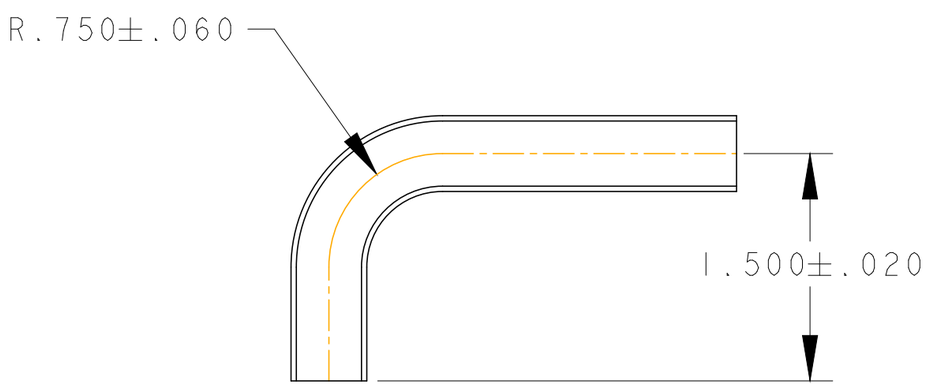

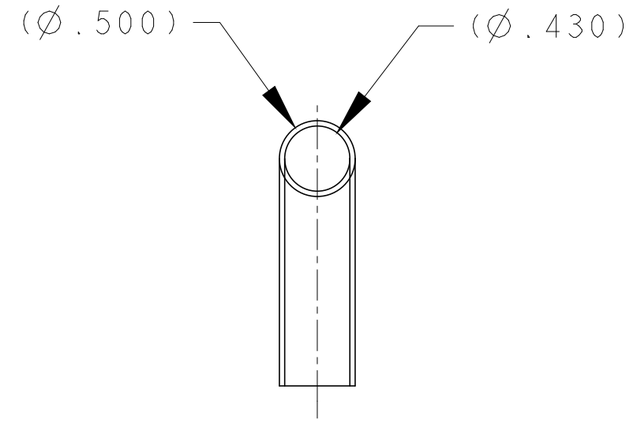

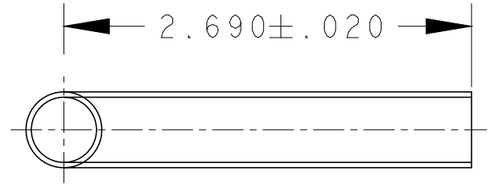

B	AD			2/16/01	CHANGE MATERIAL FROM 304 SS TO 316 SS
A					INITIAL RELEASE
REV	DWG	CHK	ZONE	DATE	CHANGES

UNLESS OTHERWISE SPECIFIED

PROJECTION:

TOLERANCES		
	X.X ± 0.1	FRAC. ± 1/64
	X.XX ± 0.03	Angles ± 1.0°
	X.XXX ± 0.010	FINISH 125

DO NOT SCALE PRINT

THREADS ARE CLASS 2
CHAMFER ENDS OF ALL SCREW TREADS 30°
CUT ROUND, 1.5 THREAD RELIEF ON MACHINED THREADS
BREAK EDGES .016 MAX. ON MACHINED WORK
REMOVE BURRS, WELD SPLATTER & LOOSE SCALE
IN ACCORDANCE WITH ASME Y14.5M & B46.1

DESCRIPTION	MATERIAL	MAT. LOCATION
TUBE, .5 O.D. x .035 WALL	316 SS	-

SHOP ORDERS

ACCT NO.	NO. REQD	SER NO.	-
DEL TO		DATE ISSD	-
		DATE REQD	-
SURFACE TREATMT	-		
IDENT METHOD	TAG		
PROJECT NUMBER	na		
PROJECT NAME	N/A		
DWG BY	Allan DeMello	DATE	22-Nov-00
CHK BY	D. Oshatz	DATE	
APR BY	D. Oshatz	DATE	

ERNEST ORLANDO LAWRENCE BERKELEY NATIONAL LABORATORY
UNIVERSITY OF CALIFORNIA - BERKELEY

SNS - FES MEBT
CHOPPER TARGET
RIGHT ANGLE TUBE, 1/2" O.D. x .035" WALL

MICROFILMED:	DWG. TYPE	SHOWN ON	SCALE: 1/1	DO NOT SCALE PRINTS
	PART	25B417	SHEET 1 OF 1	
PATENT CLEAR:	DESIGN ACCT. NO.	CATEGORY CODE	DWG. NO.	SIZE / REV.
	-	FE3312	25B4162	B

Dwg. File: 25B416 Model File: 25B416

Rev. 1/29/2000 J. R. Osborn

DWG. NO.	SIZE	REV.	SH.
25B4172		A	1

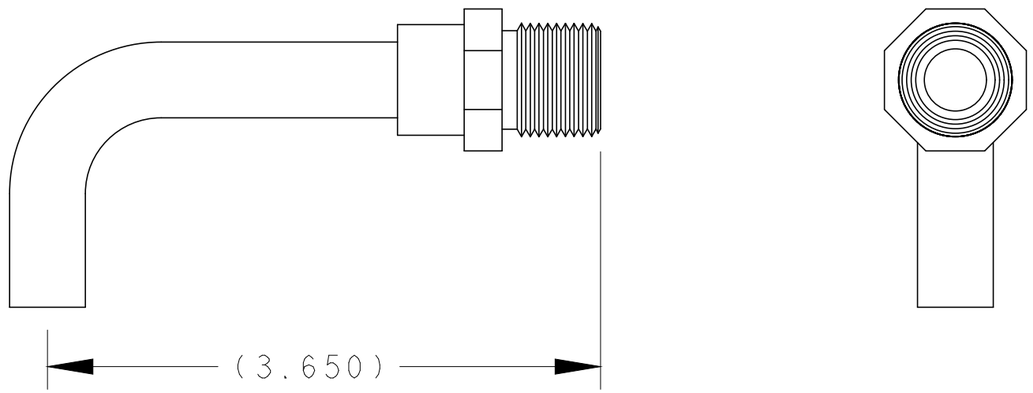

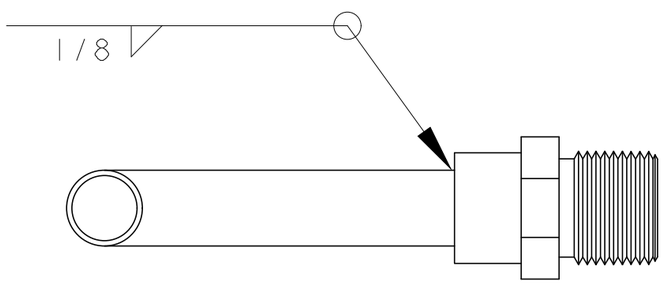

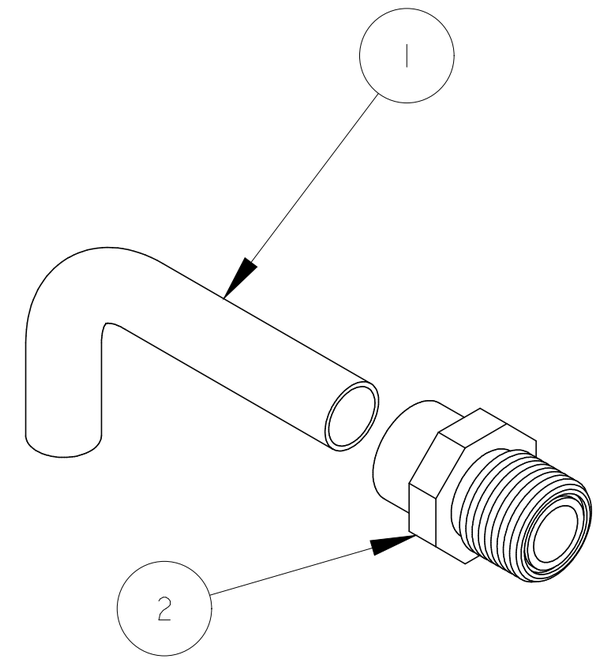

ITEM	PART NO	REQD	DESCRIPTION	MATERIAL
2	SS-8-VCO-1	1	CAJON O-RING FACE SEAL CONNECTOR	316 SS
1	25B416	1	RIGHT ANGLE TUBE, 1/2" O.D. x .035" WALL	316 SS

REV	DWG	CHK	ZONE	DATE	CHANGES
A					RELEASE FOR QUOTE

UNLESS OTHERWISE SPECIFIED

PROJECTION:

TOLERANCES	
X.X ± 0.1	FRAC. ± 1/64
X.XX ± 0.03	Angles ± 1.0°
X.XXX ± 0.010	FINISH 125

DO NOT SCALE PRINT

THREADS ARE CLASS 2
CHAMFER ENDS OF ALL SCREW TREADS 30°
CUT ROUND, 1.5 THREAD RELIEF ON MACHINED THREADS
BREAK EDGES .016 MAX. ON MACHINED WORK
REMOVE BURRS, WELD SPLATTER & LOOSE SCALE
IN ACCORDANCE WITH ASME Y14.5M & B46.1

SHOP ORDERS

ACCT NO.	NO. REQD	SER NO.	-
DEL TO		DATE ISSD	-
		DATE REQD	-
SURFACE TREATMT	-		
IDENT METHOD	TAG		
PROJECT NUMBER	na		
PROJECT NAME	-		
DWG BY	Allan DeMello	DATE	22-Nov-00
CHK BY	D. Oshatz	DATE	
APR BY	D. Oshatz	DATE	

ERNEST ORLANDO LAWRENCE BERKELEY NATIONAL LABORATORY
UNIVERSITY OF CALIFORNIA - BERKELEY

SNS - FES MEBT
CHOPPER TARGET
RIGHT ANGLE COOLING TUBE

MICROFILMED:	DWG. TYPE	SHOWN ON	SCALE: 1/1	DO NOT SCALE PRINTS
	ASSEM	25B413	SHEET 1 OF 1	
PATENT CLEAR:	DESIGN ACCT. NO.	CATEGORY CODE	DWG. NO.	SIZE / REV.
	-	FE3312	25B4172	A

Rev. 1/29/2000 J. R. Osborn

Dwg. File: 25B417 Model File: 25B417

Appendix B

CAD Renderings and Photographs

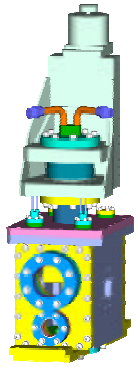

CAD Rendering
Chopper Target Complete Assembly

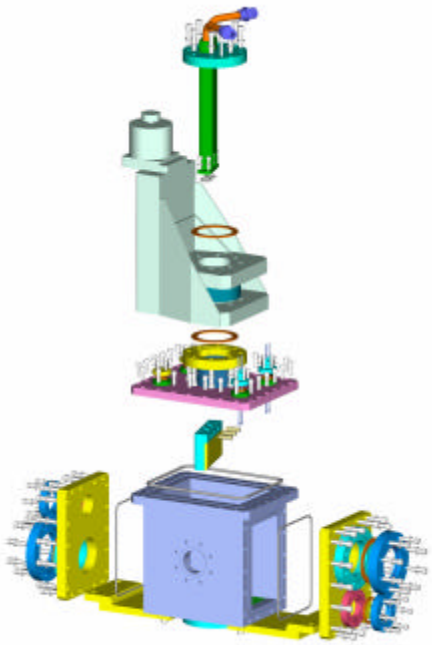

CAD Rendering
Chopper Target Complete Assembly
Exploded View

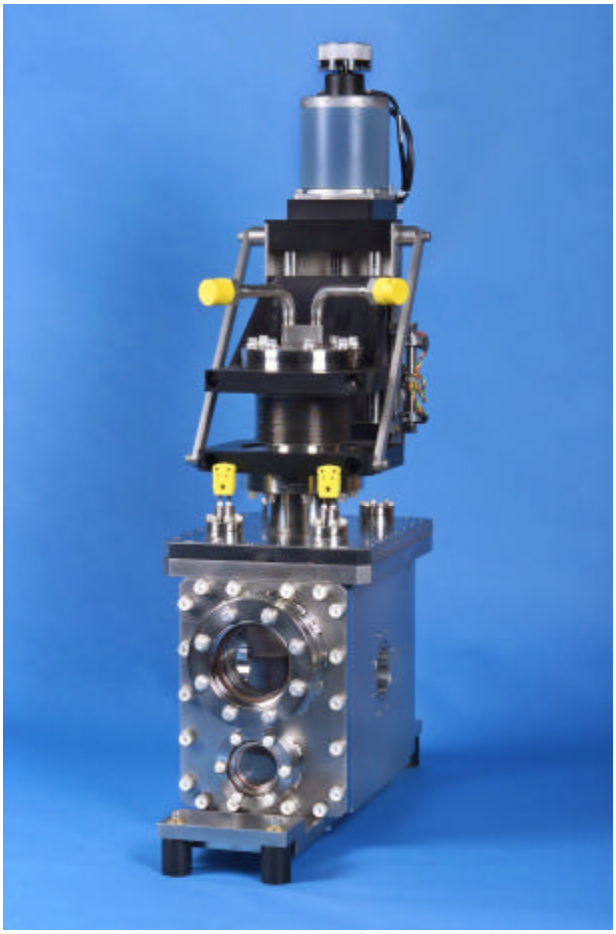

Chopper Target Complete Assembly

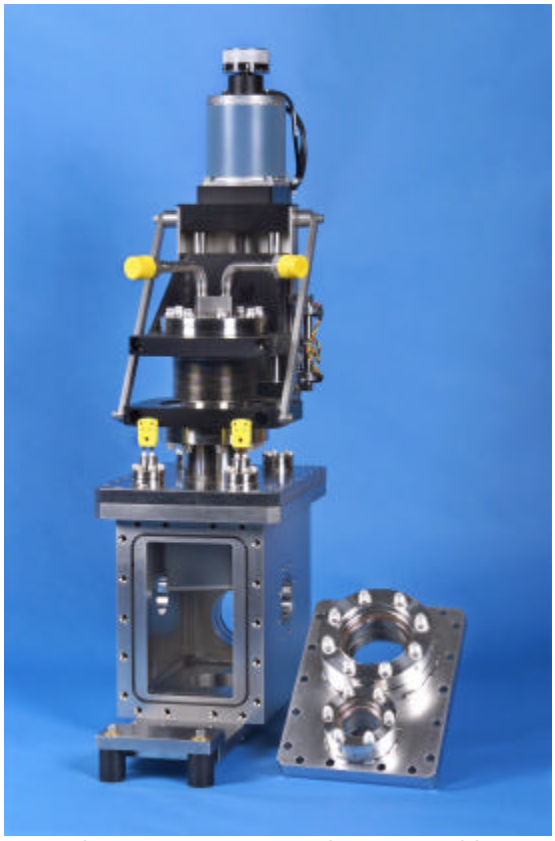

Chopper Target Complete Assembly
(one viewport flange removed)

Close-up of Chopper Target
in Vacuum Chamber

Chopper Target with Actuator Flange
and Actuator
(target is shown not in its final form)

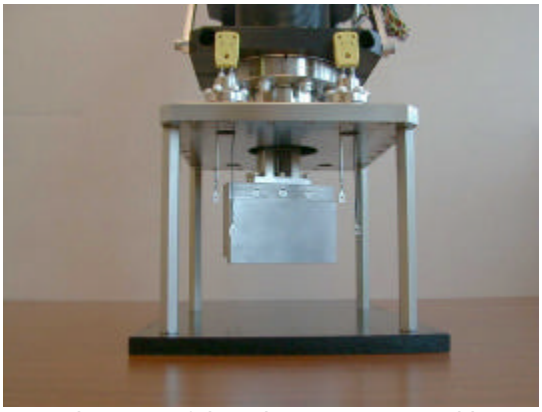

Close-up of the Chopper Target with
Actuator Flange and Actuator
(target is shown not in its final form)

Appendix C

Outside Vendor Component Information

Parker Seals

Parker O-Ring Handbook

Catalog ORD 5700A/US

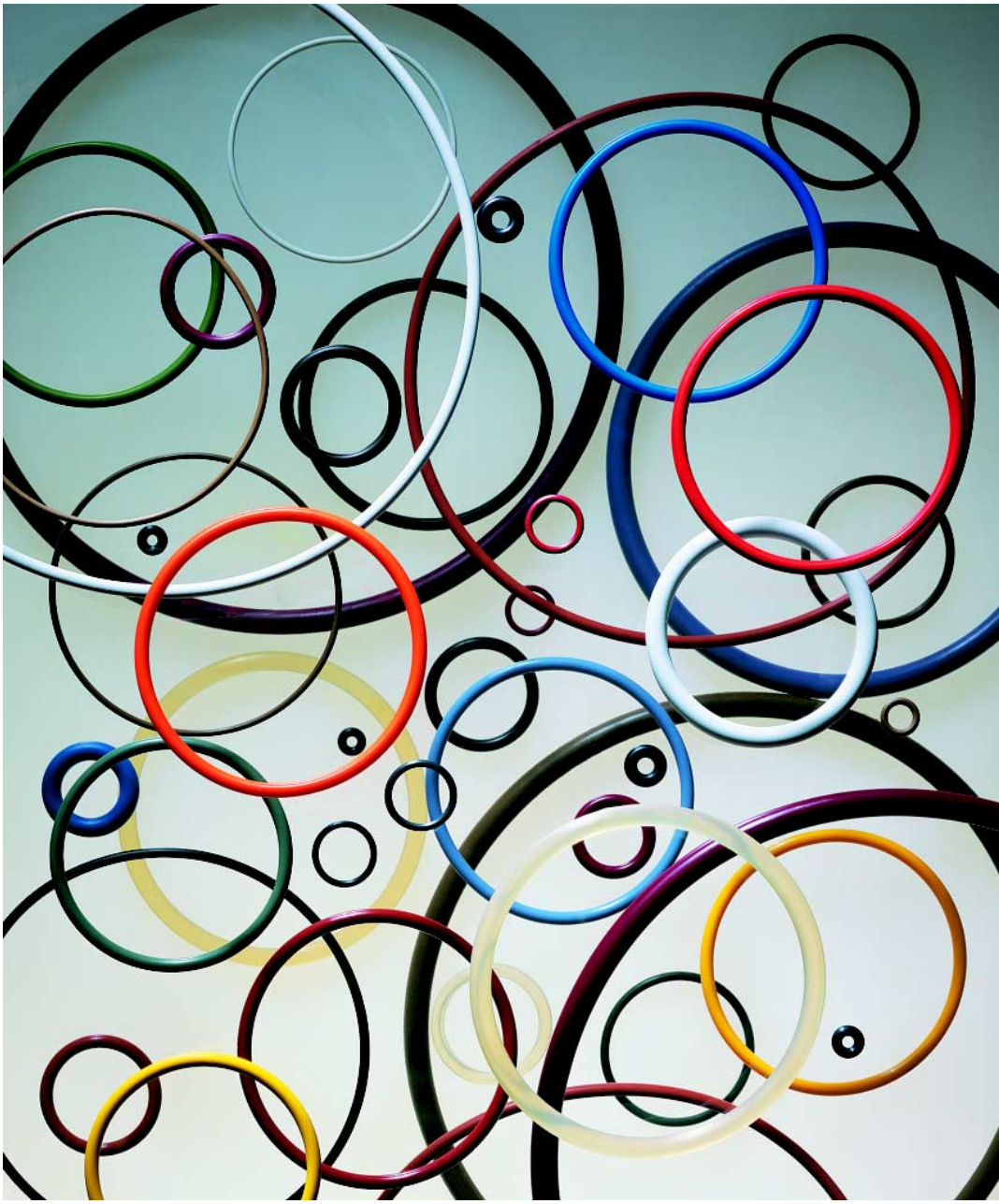

ISO 9001 / QS9000 Certified

Design Chart 4-4 — Half Dovetail Grooves

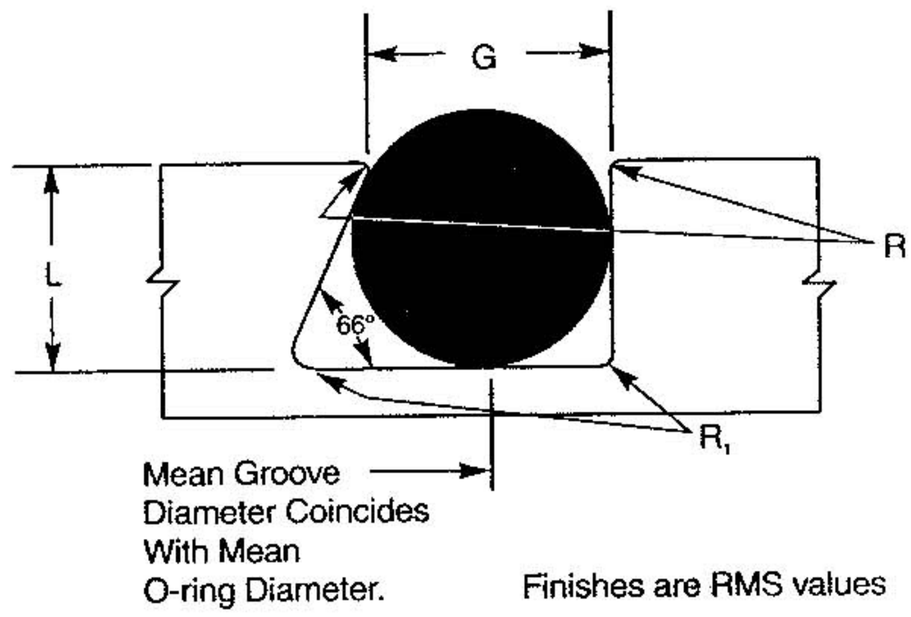

Design Chart 4-3 — For O-Ring Dovetail Grooves

Radius "R" is CRITICAL. Insufficient radius will potentially cause damage to the O-ring during installation, while excessive radius may contribute to extrusion.

O-Ring Size AS568A-	W Cross Section		L Gland Depth	Squeeze %	G Gland Width (To sharp corner)	R	R_1
	Nominal	Actual					
004 through 050	1/16	.070 ±.003	.052 to .054	25	.064 to .066	.005	1/64
102 through 178	3/32	.103 ±.003	.083 to .085	19	.095 to .097	.010	1/64
201 through 284	1/8	.139 ±.004	.113 to .115	18	.124 to .128	.010	1/32
309 through 395	3/16	.210 ±.005	.173 to .176	17	.171 to .175	.015	1/32
425 through 475	1/4	.275 ±.006	.234 to .238	15	.255 to .257	.015	1/16
Special	3/8	.375 ±.007	.319 to .323	14	.350 to .358	.020	3/32

NOTE: These design recommendations assume metal-to-metal contact. In special applications, for example in the semiconductor industry, deviation from these recommendations may be necessary. When designing with Parofluor™ elastomers, one should take into consideration that perfluorinated elastomers may require more squeeze than an FKM material to obtain optimum sealing performance. To increase squeeze, modifications of the design recommendations shown above are necessary.

Design Chart 4-4: Half Dovetail Grooves

Parker Hannifin Corporation • O-Ring Division
2360 Palumbo Drive, Lexington, KY 40509
Phone: (859) 269-2351 • Fax: (859) 335-5128
www.parker.com/o-ring

Dimensions From Standard Tooling *(Continued)*

Parker Size Number	Class III				Class IV				Class V				Class VI			
	ID	Tol ±	W	Tol ±	ID	Tol ±	W	Tol ±	ID	Tol ±	W	Tol ±	ID	Tol ±	W	Tol ±
2-234	2.936	.035	.137	.005	2.921	.038	.136	.006	2.906	.042	.135	.006	2.891	.045	.135	.006
2-235	3.059	.035			3.044	.039			3.028	.043			3.013	.046		
2-236	3.182	.036			3.166	.040			3.150	.043			3.134	.047		
2-237	3.305	.036			3.288	.040			3.272	.044			3.255	.048		
2-238	3.428	.037			3.411	.041			3.393	.045			3.376	.049		
2-239	3.551	.041			3.533	.045			3.515	.050			3.497	.054		
2-240	3.674	.041			3.656	.046			3.637	.050			3.618	.055		
2-241	3.797	.042			3.778	.047			3.759	.051			3.739	.056		
2-242	3.920	.042			3.900	.047			3.880	.052			3.860	.057		
2-243	4.043	.043			4.023	.048			4.002	.053			3.982	.058		
2-244	4.166	.045			4.145	.050			4.124	.055			4.103	.060		
2-245	4.289	.046			4.267	.051			4.245	.056			4.224	.061		
2-246	4.412	.046			4.390	.052			4.367	.057			4.345	.062		
2-247	4.535	.047			4.512	.052			4.489	.058			4.466	.063		
2-248	4.658	.047			4.635	.053			4.611	.058			4.587	.064		
2-249	4.781	.052			4.757	.058			4.733	.064			4.708	.070		
2-250	4.904	.053			4.879	.059			4.854	.065			4.829	.071		
2-251	5.027	.053			5.002	.060			4.976	.066			4.951	.072		
2-252	5.150	.054			5.124	.060			5.098	.066			5.072	.073		
2-253	5.273	.054			5.246	.061			5.220	.067			5.193	.074		
2-254	5.396	.055			5.369	.061			5.341	.068			5.314	.074		
2-255	5.519	.055			5.491	.062			5.463	.069			5.435	.075		
2-256	5.642	.056			5.614	.063			5.585	.069			5.556	.076		
2-257	5.765	.056			5.736	.063			5.707	.070			5.677	.077		
2-258	5.888	.057			5.858	.064			5.828	.071			5.798	.078		
2-259	6.134	.062			6.103	.070			6.072	.077			6.041	.085		
2-260	6.380	.063			6.348	.071			6.315	.079			6.283	.087		
2-261	6.626	.064			6.593	.072			6.559	.080			6.525	.088		
2-262	6.872	.065			6.837	.074			6.802	.082			6.767	.090		
2-263	7.118	.071			7.082	.080			7.046	.088			7.010	.097		
2-264	7.364	.072			7.327	.081			7.289	.090			7.252	.099		
2-265	7.610	.073			7.572	.082			7.533	.091			7.494	.101		
2-266	7.856	.074			7.816	.083			7.776	.093			7.736	.102		
2-267	8.102	.080			8.061	.090			8.020	.099			7.979	.109		
2-268	8.348	.081			8.306	.091			8.263	.101			8.221	.111		
2-269	8.594	.081			8.551	.092			8.507	.102			8.463	.113		
2-270	8.840	.082			8.795	.093			8.750	.104			8.705	.115		
2-271	9.086	.088			9.040	.099			8.994	.110			8.948	.121		
2-272	9.332	.089			9.285	.101			9.237	.112			9.190	.123		
2-273	9.578	.090			9.530	.102			9.481	.113			9.432	.125		
2-274	9.824	.091			9.774	.103			9.724	.115			9.674	.127		
2-275	10.316	.093			10.264	.105			10.211	.118			10.159	.130		
2-276	10.808	.105			10.753	.118			10.698	.131			10.643	.144		
2-277	11.300	.106			11.243	.120			11.185	.134			11.128	.148		
2-278	11.792	.108			11.732	.123			11.672	.137			11.612	.151		
2-279	12.776	.112			12.711	.127			12.646	.143			12.581	.158		
2-280	13.760	.115			13.690	.132			13.620	.149			13.550	.166		
2-281	14.744	.119			14.669	.137			14.594	.155			14.519	.173		
2-282	15.700	.132			15.620	.152			15.540	.171			15.460	.190		
2-283	16.684	.141			16.599	.161			16.514	.182			16.429	.202		
2-284	17.668	.150	▼	▼	17.578	.171	▼	▼	17.488	.193	▼	▼	17.398	.214	▼	▼
2-309	.405	.006	.207	.007	.403	.007	.206	.007	.401	.007	.205	.008	.399	.008	.203	.008
2-310	.467	.007			.465	.007			.463	.008			.460	.008		
2-311	.528	.009	▼	▼	.526	.010	▼	▼	.523	.010	▼	▼	.520	.011	▼	▼
2-312	.590	.011	.207	.007	.587	.012	.206	.007	.584	.013	.205	.008	.581	.013	.203	.008

Table 10-8: Dimensions From Standard Tooling *(Continued)*

Parker Hannifin Corporation • O-Ring Division
2360 Palumbo Drive, Lexington, KY 40509
Phone: (859) 269-2351 • Fax: (859) 335-5128
www.parker.com/o-ring

Dimensions From Standard Tooling *(Continued)*

Parker Size Number	Class III				Class IV				Class V				Class VI			
	ID	Tol ±	W	Tol ±	ID	Tol ±	W	Tol ±	ID	Tol ±	W	Tol ±	ID	Tol ±	W	Tol ±
2-313	.651	.011	.207	.007	.648	.012	.206	.007	.645	.013	.205	.008	.641	.014	.203	.008
2-314	.713	.013			.710	.013			.706	.014			.703	.015		
2-315	.774	.013			.770	.014			.767	.015			.763	.016		
2-316	.836	.013			.832	.014			.828	.015			.824	.016		
2-317	.897	.013			.893	.014			.888	.015			.884	.017		
2-318	.959	.014			.955	.015			.950	.016			.945	.017		
2-319	1.020	.014			1.015	.015			1.010	.016			1.005	.017		
2-320	1.082	.016			1.077	.017			1.071	.019			1.066	.020		
2-321	1.143	.016			1.138	.018			1.132	.019			1.126	.020		
2-322	1.205	.016			1.199	.018			1.193	.019			1.187	.021		
2-323	1.266	.017			1.260	.018			1.254	.020			1.247	.021		
2-324	1.328	.017			1.322	.018			1.315	.020			1.308	.022		
2-325	1.451	.020			1.444	.022			1.437	.024			1.429	.026		
2-326	1.574	.021			1.566	.023			1.558	.025			1.550	.027		
2-327	1.697	.021			1.689	.023			1.680	.025			1.672	.027		
2-328	1.820	.022			1.811	.024			1.802	.026			1.793	.028		
2-329	1.943	.025			1.934	.027			1.924	.030			1.914	.032		
2-330	2.066	.026			2.056	.028			2.045	.031			2.035	.033		
2-331	2.189	.026			2.178	.029			2.167	.031			2.156	.034		
2-332	2.312	.026			2.301	.029			2.289	.032			2.277	.035		
2-333	2.435	.029			2.423	.032			2.411	.035			2.398	.038		
2-334	2.558	.029			2.545	.032			2.532	.036			2.519	.039		
2-335	2.681	.030			2.668	.033			2.654	.036			2.641	.040		
2-336	2.804	.030			2.790	.034			2.776	.037			2.762	.041		
2-337	2.927	.035			2.913	.038			2.898	.042			2.883	.045		
2-338	3.050	.035			3.035	.039			3.019	.043			3.004	.046		
2-339	3.173	.036			3.157	.039			3.141	.043			3.125	.047		
2-340	3.296	.036			3.280	.040			3.263	.044			3.246	.048		
2-341	3.419	.037			3.402	.041			3.385	.045			3.367	.049		
2-342	3.542	.041			3.524	.045			3.506	.050			3.488	.054		
2-343	3.665	.041			3.647	.046			3.628	.050			3.610	.054		
2-344	3.788	.042			3.769	.046			3.750	.051			3.731	.056		
2-345	3.911	.042			3.892	.047			3.872	.052			3.852	.057		
2-346	4.034	.043			4.014	.048			3.993	.053			3.973	.058		
2-347	4.157	.045			4.136	.050			4.115	.055			4.094	.060		
2-348	4.280	.046			4.259	.051			4.237	.056			4.215	.061		
2-349	4.403	.046			4.381	.051			4.359	.057			4.336	.062		
2-350	4.526	.047			4.503	.052			4.480	.058			4.457	.063		
2-351	4.649	.047			4.626	.053			4.602	.058			4.579	.064		
2-352	4.772	.047			4.748	.053			4.724	.059			4.700	.065		
2-353	4.895	.055			4.871	.061			4.846	.067			4.821	.073		
2-354	5.018	.055			4.993	.061			4.967	.068			4.942	.074		
2-355	5.141	.056			5.115	.062			5.089	.068			5.063	.075		
2-356	5.264	.056			5.238	.063			5.211	.069			5.184	.076		
2-357	5.387	.057			5.360	.063			5.333	.070			5.305	.076		
2-358	5.510	.057			5.482	.064			5.454	.071			5.426	.077		
2-359	5.633	.058			5.605	.064			5.576	.071			5.548	.078		
2-360	5.756	.058			5.727	.065			5.698	.072			5.669	.079		
2-361	5.879	.059			5.850	.066			5.820	.073			5.790	.080		
2-362	6.125	.062			6.094	.070			6.063	.077			6.032	.085		
2-363	6.371	.063			6.339	.071			6.307	.079			6.274	.087		
2-364	6.617	.064			6.584	.072			6.550	.080			6.517	.088		
2-365	6.863	.065			6.829	.073			6.794	.082			6.759	.090		
2-366	7.109	.071			7.073	.080			7.037	.088			7.001	.097		
2-367	7.355	.072	.207	.007	7.318	.081	.206	.007	7.281	.090	.205	.008	7.243	.099	.203	.008

Table 10-8: Dimensions From Standard Tooling *(Continued)*

Parker Seals
Build With The Best!
Parker Hannifin Corporation • O-Ring Division
2360 Palumbo Drive, Lexington, KY 40509
Phone: (859) 269-2351 • Fax: (859) 335-5128
www.parker.com/o-ring

VCO® O-ring Face Seal Fittings

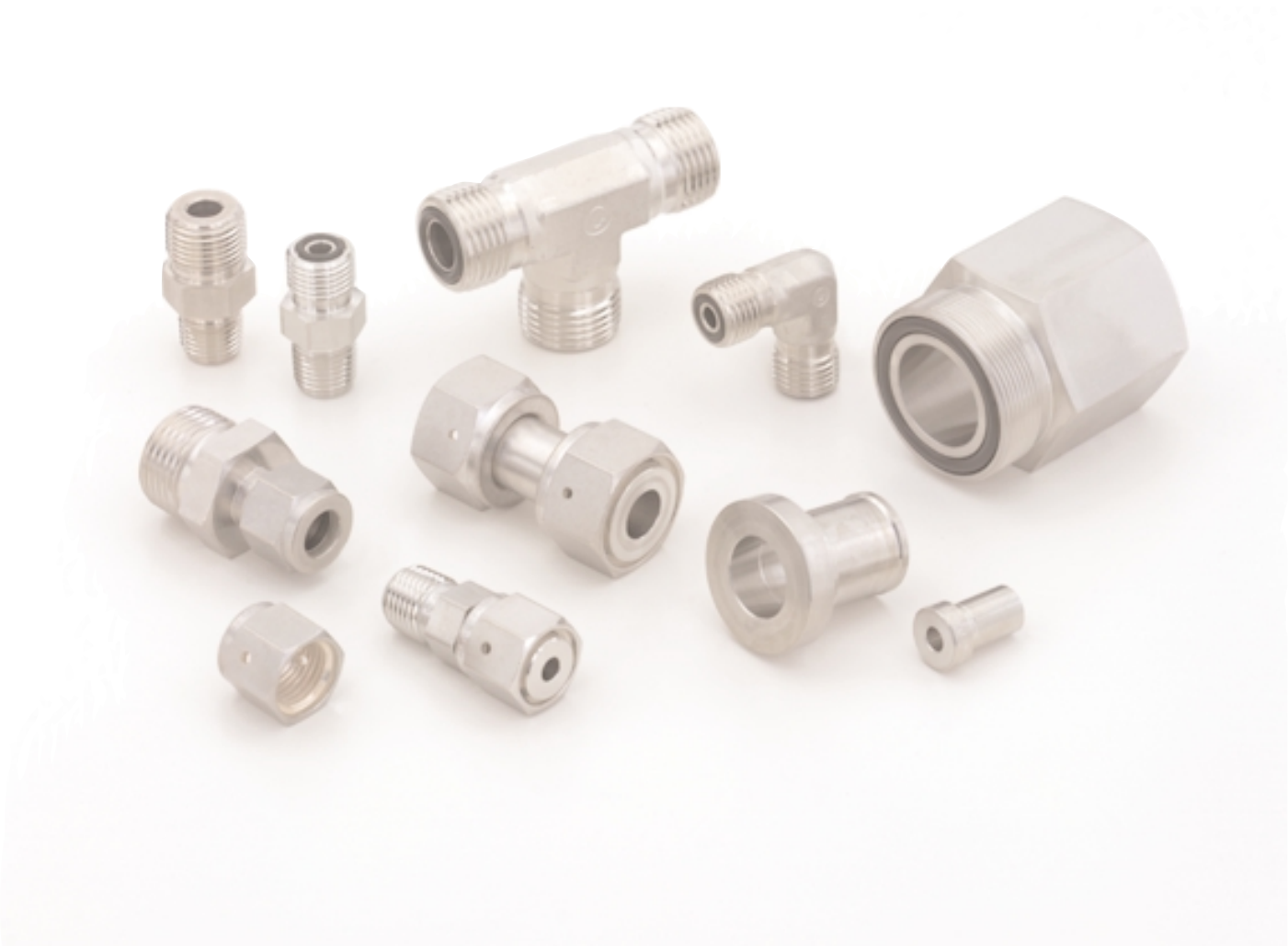

ZERO CLEARANCE CONNECTORS

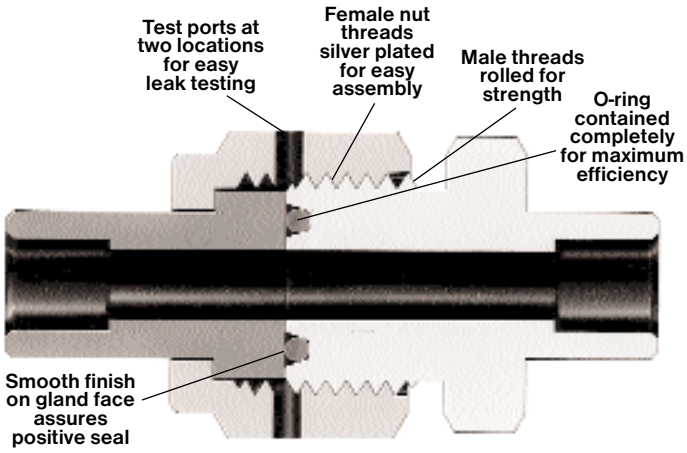

Swagelok® VCO® O-ring face seal fittings are designed for rapid make-up in pipe, tube and welded systems. Because of their unique design, no axial clearance is required, allowing easy installation where space is limited. Sealing is accomplished with a captive O-ring in the body component. Assemblies can be used from high pressure to critical vacuum, within a wide range of temperatures.

CAUTION

Do not mix or interchange parts with those of other manufacturers.

MATERIALS

Bodies, Glands and Nuts — 316 stainless steel.

Automatic Tube Weld Fittings — 316L stainless steel.

O-rings — 70 durometer fluorocarbon (Viton, Fluorel) is standard on VCO bodies. 90 durometer fluorocarbon is used with SAE/MS threads. Perfluoroelastomer (Kalrez), Buna N, TFE, and ethylene-propylene available on special order.

TECHNICAL DATA

Pressure Ratings

Pressure ratings published in this catalog are calculated in accordance with Power Piping Code ANSI B31.3.
To determine pressure ratings in accordance with ANSI B31.1, multiply rating by 0.94.

Temperature Ratings

Maximum temperature ratings for VCO Fittings are based on the O-ring material used:

fluorocarbon:	400°F (200°C)
Buna N:	250°F (120°C)
TFE:	450°F (230°C)
perfluoroelastomer:	550°F (280°C)
ethylene-propylene:	300°F (140°C)

Testing

VCO assemblies have been consistently helium leak tested to a rate of 4 x 10-9 std cm^3/s. without leakage.

Dimensions

For reference only, subject to change.

PRODUCT LOCATOR

Typical Assemblies . . . . . Page 2
Components
Nuts . . . . . Page 3
Glands . . . . . Pages 3,4
Bodies . . . . . Pages 4,5,6
WVCO® O-ring
Face Seal Connectors . . . . . Page 7
Installation Instructions . . . . . Page 8
VCO Fittings
Used As Integral End Connections . . . . . Page 8

TYPICAL ASSEMBLY

VCO assemblies are made up of three basic components

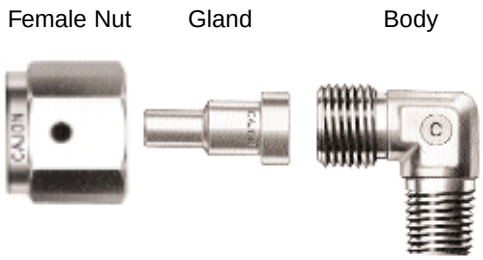

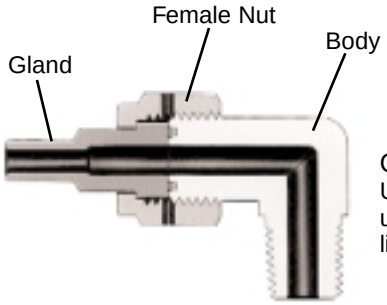

The size of each component is designated by the first numeral in the Ordering Number. Each ***mated*** component will have the same numeral, except for the following: -2-VCO bodies and glands use -4-VCO-4 nuts; -6-VCO bodies and glands use -8-VCO-4 nuts.

O-ring Uniform Size Number

Use chart below to find O-ring uniform size number of components listed in this catalog.

VCO Component Size	O-ring Uniform Size Number
-2-VCO -4-VCO	010
-6-VCO -8-VCO	111
-12-VCO	116
-16-VCO	215

Socket Weld Reducing Gland

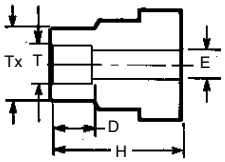

T Tube Socket	Ordering Number	D	E	H	Tx	Working Pressure psig	Working Pressure bar
1/8	SS-4-VCO-3-2TSW	0.10	0.09	0.77	0.29	12 600	860
1/4	SS-8-VCO-3-4TSW	0.28	0.18	0.81	0.48	10 700	730

Blind Gland

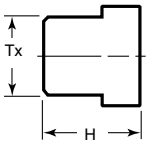

Ordering Number	H	Tx
SS-4-VCO-3-BL	0.44	0.38
SS-8-VCO-3-BL	0.44	0.60
SS-12-VCO-3-BL	0.50	0.92
SS-16-VCO-3-BL	0.50	1.19

BODIES

Socket Weld Connector
Adapts tubing to O-ring face seal.

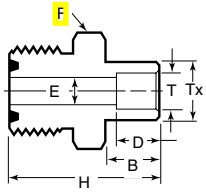

T Tube Socket	Ordering Number	E	D	E	F Hex Flat	H	Tx	Working Pressure psig	Working Pressure bar
1/8	SS-2-VCO-1	0.10	0.10	0.09	5/8	0.88	0.29	12 600	860
1/4	SS-4-VCO-1	0.31	0.28	0.18	5/8	1.09	0.38	6800	460
3/8	SS-6-VCO-1	0.38	0.31	0.28	15/16	1.28	0.60	8200	560
1/2	SS-8-VCO-1	0.44	0.38	0.40	15/16	1.34	0.60	3000	200
3/4	SS-12-VCO-1	0.50	0.44	0.62	1 5/16	1.50	0.92	3700	250
1	SS-16-VCO-1	0.69	0.62	0.87	1 5/8	1.72	1.19	3000	200

Automatic Tube Weld Connector
Adapts tubing to O-ring face seal.

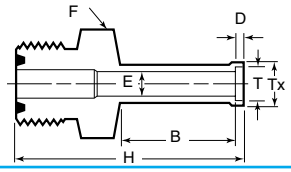

T Tube Size	Ordering Number	B	D	E①	F Hex Flat	H	Tx	Nominal Wall Thickness	Working Pressure psig	Working Pressure bar
1/4	316L-4-VCO-1A	0.75	0.02	0.18	5/8	1.59	0.29	0.035	5100	350
3/8	316L-8-VCO-1A6	0.75	0.03	0.31	15/16	1.74	0.41	0.035	3300	220
1/2	316L-8-VCO-1A	0.75	0.04	0.40	15/16	1.75	0.55	0.049	3500	240
3/4	316L-12-VCO-1A	0.75	0.04	0.65	1 5/16	1.78	0.80	0.049	2400	160
1	316L-16-VCO-1A	0.96	0.04	0.87	1 5/8	2.03	1.06	0.065	2400	160

Male Connector
Converts female NPT thread to O-ring face seal.

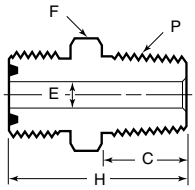

P Male NPT Size	Ordering Number	C	E①	F Hex Flat	H	Working Pressure psig	Working Pressure bar
1/8	SS-4-VCO-1-2	0.38	0.18	5/8	1.16	10 000	680
1/4	SS-4-VCO-1-4	0.56	0.18	5/8	1.34	13 400	920
3/8	SS-8-VCO-1-6	0.56	0.38	15/16	1.46	7800	530
1/2	SS-8-VCO-1-8	0.75	0.40	15/16	1.65	10 000	680
3/4	SS-12-VCO-1-12	0.75	0.62	1 5/16	1.75	7300	500
1	SS-16-VCO-1-16	0.94	0.87	1 5/8	1.97	5300	360

SAE/MS Connector
Converts SAE/MS straight thread boss to O-ring face seal.

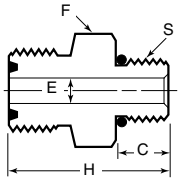

S Straight Thread Size	Ordering Number	C	E①	F Hex Flat	H	ST O-ring Uniform Size Number②	Working Pressure psig	Working Pressure bar
7/16-20	SS-4-VCO-1-4ST	0.36	0.18	11/16	1.24	-904	4500	310
9/16-18	SS-4-VCO-1-6ST	0.39	0.18	11/16	1.17	-906	4500	310
7/16-20	SS-8-VCO-1-4ST	0.36	0.20	15/16	1.36	-904	4500	310
9/16-18	SS-8-VCO-1-6ST	0.39	0.28	15/16	1.39	-906	4500	310
3/4-16	SS-8-VCO-1-8ST	0.44	0.40	1	1.47	-908	4500	310
1-1/16-12	SS-12-VCO-1-12ST	0.59	0.62	1 3/8	1.73	-912	3600	240
1-5/16-12	SS-16-VCO-1-16ST	0.59	0.87	1 5/8	1.79	-916	2900	190

① Some configurations have more than one bore size. This dimension always references the smallest nominal ID of the part.

② O-rings used with SAE/MS threads are fluorocarbon (90 durometer).

Thermocouples: Single Pair-Spade With Plug

Conflat® Flange
Bakeable to 450°C*
ISO-NW flange on request

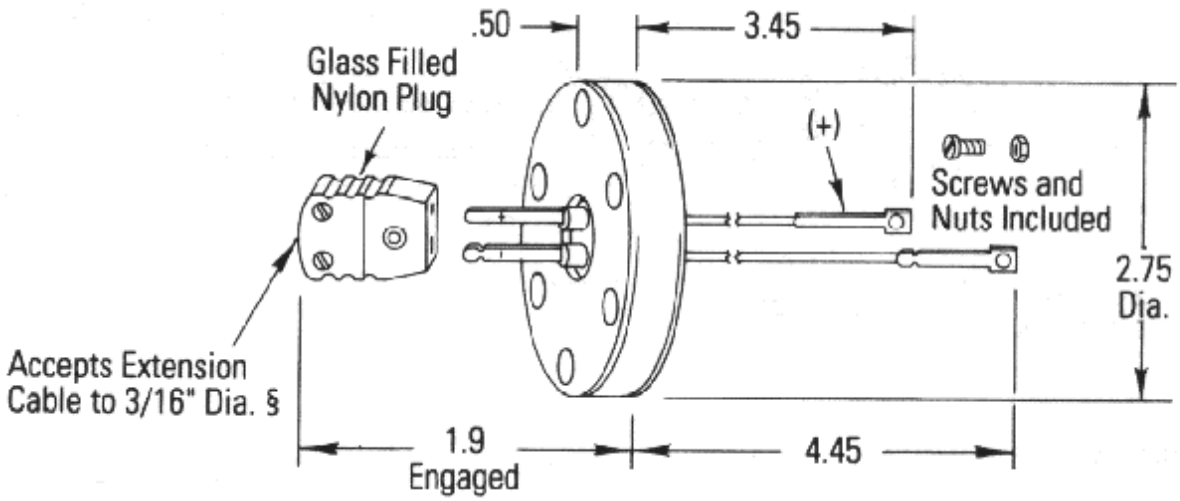

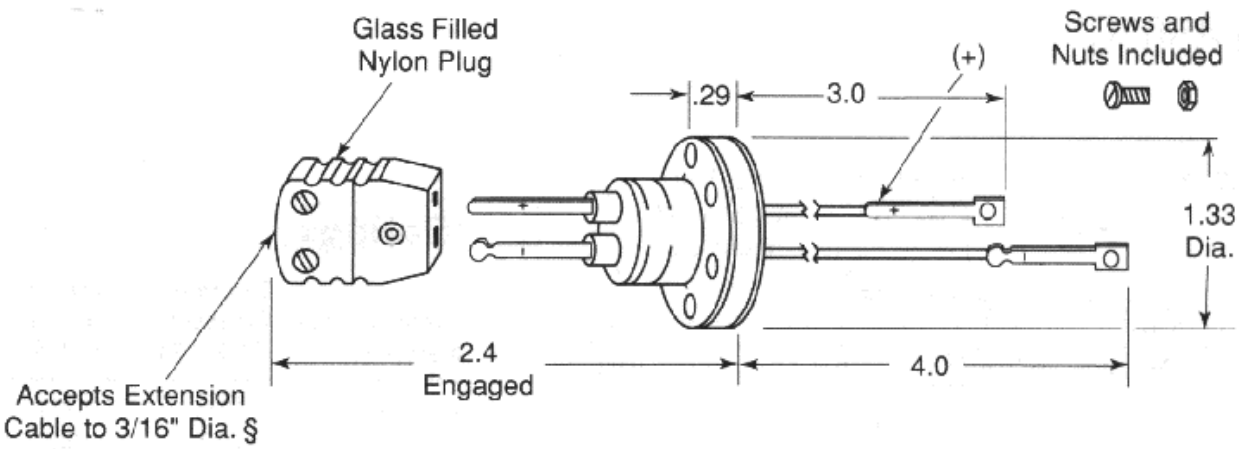

Thermocouples: Single Pair-Spade With Plug

Conflat® Flange
Bakeable to 450°C*
ISO-NW flange on request

ANSI TYPE	Thermocouple Materials	Plug Color	External Pressure PSIG @ 20ºC	Int. Pressure PSIG @ 20ºC	Figure Number	Part Number
K	Chromel®/Alumel®	Yellow	250	250	80	10583-01-CF
J	Iron/Constantan®	Black	250	250	80	10583-02-CF
C+	Tungsten 5% Re**/Tungsten 26% Re**	Red	250	250	80	10583-03-CF
E	Chromel®/Constantan®	Violet	250	250	80	10583-04-CF
Nt	Nicrosil/Nisil	Orange	250	250	80	10583-05-CF
K	Chromel®/Alumel®	Yellow	250	250	79	8118-01-CF
N+	Nicrosil/Nisil	Orange	250	250	79	8118-02-CF
C+	Tungsten 5% Re**/Tungsten 26% Re**	Red	250	250	79	8118-04-CF
E	Chromel®/Constantan®	Violet	250	250	79	8118-05-CF
J	Iron/Constantan®	Black	250	250	79	8370-01-CF

All dimensions are in inches.
*With plug disconnected. Operable to 200ºC with plug engaged. + Not ANSI symbol. Products in this catalog are vacuum-rated 10^{-10} torr unless otherwise noted. For pressure rating, see each table. See Technical Reference section for cable attachment.
**Uses compensating wire; maximum jun
ction temperature 250ºC

thermionics vacuum products

EMT Series Precision Translators

SEE BELOW FOR NEW PRICING.

EMT series translators provide single axis (Z only) motion. These translators are based on the EM-200 series manipulator Z drive. They are calibrated in 0.001" increments with 0.100" travel per turn with a coarse side scale. They are available with four different bellows I.D.s. The standard base (stationary) flange is 2.75" O.D., with large O.D.s optional (required on longer travel units). The traveling flange is 2.75" O.D. Both Flanges are supplied tapped as standard, but we can supply clearance holes with appropriate neck assemblies to accommodate those applications which require it.

Assemblies are available with or without axis tube probe/bearing assembly.

The 2.75" and 4.5" O.D. flanges are rigidly attached to the traveling and base structure in a special way. The "Super Grip System" holds the flange about its perimeter by means of a tongue and groove, providing positive, rigid attachment with the greatest lever arm possible. The flange (and thus the bolt pattern) is adjustable to any orientation.

The EMTX Series translator is available for applications where longer strokes and/or larger payloads are required.

EMT Series Specifications

- 1.04", 1.39", 1.87", 2.25" or 2.5" I.D. bellows
- 2" to 36"+ Z travel, gearbox Acme drive, 0.100"/turn, 10 turns/inch, 0.001" divisions, position lock

Base Flange

- 2.75" (standard), 4.5", 6" or 8" O.D. base flange, tapped (except 2.5" ID bellows which have 4.5" O.D. Flanges standard)

Traveling Flange

- 2.75" (standard), 3.3" or 4.5" O.D. traveling flange, tapped

Features

- Hardened stainless steel Z guide rods
- All linear bearings hardened stainless steel
- Bakeable to 200°C fully assembled
- Stainless steel only material exposed to vacuum
- Includes 2" Z travel (additional Z travel available in 2" increments)

Motion Specifications

Z axis	resolution <0.0005"(0.013mm) repeatability <0.0005"(0.013mm) backlash <0.0007"(0.018mm)

Ordering Information

Single-Axis Ultra High Vacuum Precision Translators
with 2" of Z travel

Z ID	DIMENSIONS		Model No.	New Price	Addl. Z Travel per Inch**
	A	C min*			
1.04"	9.5"	2.83"	**EMT-1.04-2**	**$1,520.**	**$195.**
1.39"****	9.5"	2.83"	**EMT-1.39-2**	**$1,575.**	**$224.**
1.87"	9.5"	2.83"	**EMT-1.87-2**	**$1,975.**	**$248.**
2.25'	10.5'	2.83'	**EMT-2.25-2**	**$2,740.**	**$272.*** **
2.5"	10.5"	2.83"	**EMT-2.5-2**	**$2,910.**	**$280.*** **

*NOTE: This equipment has the shortest possible minimum flange-to-flange "C min" dimension. **This distance can be changed by a large number of possible options. The C min dimension shown is only for the exact model listed (both flanges tapped). Please consult the factory for further information.**

**Additional Z travel is available in 2" increments.

***With 4.5" O.D. Base and traveling flange, and up to 6" stroke, maximum.

****When Z stroke exceeds 12" this model is changed to a 1.53" ID bellows at no additional charge.

EMTX Extended Stroke Series

For longer strokes or increased payload

- OPN linear bearings on traveling stage
- Intermittent support for guide rods
- Longer bearing spacing on traveling stage
- Double Acme nut arrangement

Ordering Information

EMTX Single-Axis Ultra High Vacuum Precision Translators
with 2" of Z travel

Z ID	DIMENSIONS		Model No.	New Price	Addl. Z Travel per Inch*
	A	C min			
1.04"	*Consult Factory*		**EMTX-1.04-2**	**$2,010.**	**$220.**
1.39"	*Consult Factory*		**EMTX-1.39-2**	**$2085.**	**$260.**
1.87"	*Consult Factory*		**EMTX-1.87-2**	**$2,600.**	**$280.**
2.25"	*Consult Factory*		**EMTX-2.25-2**	**$3,625.**	**$315.**
2.5"	*Consult Factory*		**EMTX-2.5-2**	**$3,855.**	**$330.**

*NOTE: Additional Z travel is available in 2" increments.

Base Flange

O.D.	DIMENSIONS		
	"B"	"E"	"F"
2.75"	3.50"	1.73"	5.00"
4.50"	3.50"	2.76"	7.18"
6.00"	3.50"	3.00"	6.78"
8.00"	5.00"	4.00"	8.78"

/PL Probe Support Option

Adds linear all stainless steel bearing at base of Z stage

Tube O.D.	Add to "C" Dimension	Model No.	SS Base Price
0.75"	2.50"	**/PL-.75**	**$740.**
1.00"	2.65"	**/PL-1**	**$745.**
1.50"	2.25"	**/PL-1.5***	**$1,000.**
2.00"	2.50"	**/PL-2**	**$1,215.**

*NOTE: 1.5" probe requires 1.87" bellows.

Options

Option	Name	Description	Price
Micrometer Z Drive	**/MZD**	Available on 2" Z travel, 1.39" ID bellows only 2" diameter drum dial 0.0001" divisions	**$75.**
Extended Backframe	**/EB**	Allows greater space about traveling flange Add 1.5" to "B" dimension	**$235.**
Base Flange Change from 2.75" O.D. to:	**/B-3.3**	3.3" O.D.	**$135.**
	/B-3.3/EB	3.3" O.D. With extended backframe	**$370.**
	/B-4.5	4.5" O.D. includes /EB option	**$400.**
	/B-6	6" O.D. Includes /EB option	**$460.**
	/B-8	8" O.D. Includes /EB option	**$465.**
Traveling Flange Change from 2.75" O.D. To:	**/T-3.3**	3.3" O.D. Includes /EB option	**$380.**
	/T-4.5	4.5" O.D. Includes /EB option	**$400.**
/MS Stepping or /MY Synchronous Motor Drive			

/PLR or /PTF Probe Support Option

Adds linear all stainless steel bearing at base of Z stage

Tube O.D.	Add to "C" Dimension	Model No.	SS Base Price	Teflon® Model No.	Teflon® Base Price
0.75"	2.25"	**/PLR-.75**	**$995.**	**/PTF-.75**	**$500.**
1.00"	3.30"	**/PLR-1**	**$1,150.**	**/PTF-1**	**$550.**
1.50"	2.63"	**/PLR-1.5***	**$1,775.**	**/PTF-1.5***	**$770.**
2.00"	2.50"	**/PLR-2**	**$1,840.**	**/PTF-2**	**$885.**
*NOTE: 1.5" probe requires 1.87" bellows					

Thermionics Vacuum Products
Phone: 800-962-2310

Last updated June 16, 2000.

Appendix D

Chamber Fiducialization Data

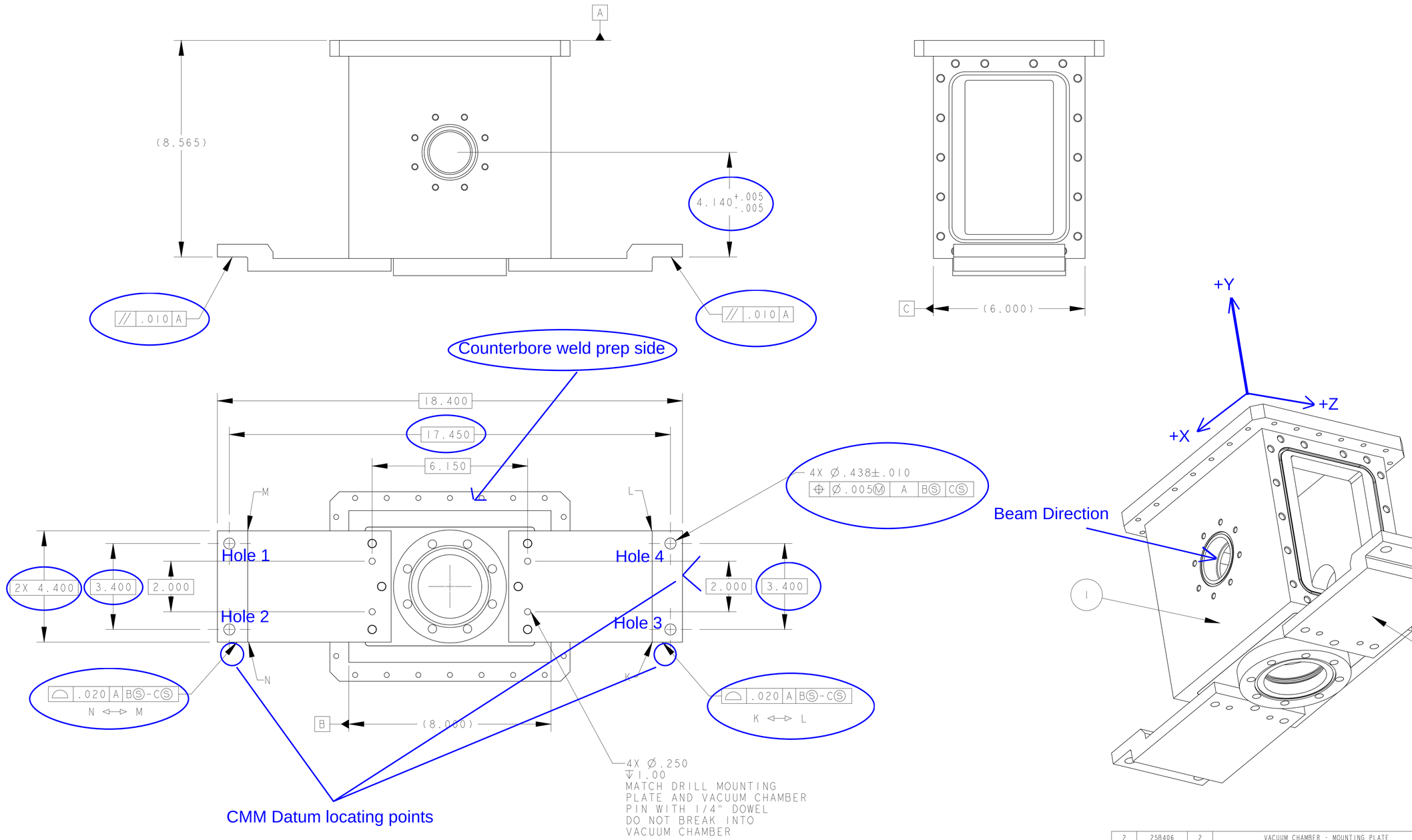

ITEM	PART NO	REQD	DESCRIPTION	MATERIAL
2	25B406	2	VACUUM CHAMBER - MOUNTING PLATE	304 SS
1	25B405	1	VACUUM CHAMBER WELDMENT	304 SS

REV	DWG	CHK	ZONE	DATE	CHANGES

UNLESS OTHERWISE SPECIFIED
PROJECTION:
TOLERANCES: X.X ± 0.1 FRAC. ± 1/64; X.XX ± 0.03 Angles ± 1.0°; X.XXX ± 0.010 FINISH 125√
DO NOT SCALE PRINT
THREADS ARE CLASS 2
CHAMFER ENDS OF ALL SCREW TREADS 30°
CUT ROUND, 1.5 THREAD RELIEF ON MACHINED THREADS
BREAK EDGES .016 MAX. ON MACHINED WORK
REMOVE BURRS, WELD SPLATTER & LOOSE SCALE
IN ACCORDANCE WITH ASME Y14.5M & B46.1

SHOP ORDERS
ACCT NO. / NO. REQD / DATE ISSD
DEL TO / DATE REQD
SURFACE TREATMT -
IDENT METHOD TAG
PROJECT NUMBER na
PROJECT NAME N/A
DWG BY Allan DeMello DATE 21-Dec-00
CHK BY D. Oshatz DATE
APR BY D. Oshatz DATE
SER NO. -

ERNEST ORLANDO LAWRENCE BERKELEY NATIONAL LABORATORY
UNIVERSITY OF CALIFORNIA - BERKELEY

SNS - FES MEBT
CHOPPER TARGET
VACUUM CHAMBER LOWER ASSEMBLY

MICROFILMED: | DWG. TYPE: ASSEM | SHOWN ON: 25B400 | SCALE: 1/2 | DO NOT SCALE PRINTS
PATENT CLEAR: | DESIGN ACCT. NO.: - | CATEGORY CODE: FE3312 | DWG. NO.: 25B4074 | SIZE: A | REV.: A
SHEET 1 OF 1

CMM Fiducialization Reference Drawing

Lawrence Berkeley National Lab
Precision Measurement Services
Robert Connors
Building 77/158
(510) 486-7611

DESCRIPTION :

PART : SNS FES MEBT CHOPPER TARGET

**** FIRST RUN ****

LEFT SIDE POINT
POINT LFT_PNT CART CS7 INCH ANGDEC 10:15 May 10,2001

	MEAS	NOM	DEV	UPTOL	LWTOL	O/T
X	-8.7240	-8.7250	0.0010	0.0000	0.0000	0.0010
Y	-2.2022	-2.2000	-0.0022	0.0000	0.0000	-0.0022
Z	8.5007	8.5000	0.0007	0.0000	0.0000	0.0007
I	-0.0002	0.0000	-0.0002			
J	-1.0000	-1.0000	0.0000			
K	-0.0000	0.0000	-0.0000			

RIGHT SIDE POINT
POINT RGHT_PNT CART CS7 INCH ANGDEC 10:15 May 10,2001

X	8.7241	8.7250	-0.0009	0.0000	0.0000	-0.0009
Y	-2.1957	-2.2000	0.0043	0.0000	0.0000	0.0043
Z	8.5007	8.5000	0.0007	0.0000	0.0000	0.0007
I	0.0004	0.0000	0.0004			
J	-1.0000	-1.0000	0.0000			
K	-0.0000	0.0000	-0.0000			

LEFT END POINT
POINT LEFT_END CART CS7 INCH ANGDEC 10:16 May 10,2001

X	-9.1980	-9.2000	0.0020	0.0000	0.0000	0.0020
Y	0.0000	-0.0000	0.0000	0.0000	0.0000	0.0000
Z	8.3503	8.3500	0.0003	0.0000	0.0000	0.0003
I	-1.0000	-1.0000	0.0000			
J	-0.0005	0.0000	-0.0005			
K	0.0001	-0.0000	0.0001			

RIGHT END POINT
POINT RGHT_END CART CS7 INCH ANGDEC 10:16 May 10,2001

X	9.1988	9.2000	-0.0012	0.0000	0.0000	-0.0012
Y	-0.0007	0.0000	-0.0007	0.0000	0.0000	-0.0007
Z	8.3503	8.3500	0.0003	0.0000	0.0000	0.0003
I	1.0000	1.0000	-0.0000			
J	0.0004	-0.0000	0.0004			
K	0.0000	0.0000	0.0000			

PARALLEL OF WINGS
PARLEL PARA FA(WING_PLN) FA(DAT_A) INCH

Parlel	0.0045	0.0045	0.0100	|+*++

DISTANCE OF BORES TO WING PLANE
DISTB DIST_Z1 FEAT(WING_PLN) FEAT(FRNT_CIRC) INCH

```
Distb       4.1404      4.1400      0.0004      0.0050     -0.0050   ----|*+++
_____________________________________________________________________________
       DISTB DIST_Z1 FEAT(WING_PLN) FEAT(BACK_CIRC) INCH
Distb       4.1401      4.1400      0.0001      0.0050     -0.0050   ----|*+++
_____________________________________________________________________________

WING HOLE LOCATIONS
        DIAM DIA_1 FEAT(CIRC1) INCH
Diam        0.4386      0.4380      0.0006      0.0100     -0.0100   ----|*+++
_____________________________________________________________________________
          2D POS_1 FA(CIRC1),MMC FA(DAT_A)RFS FA(DAT_B)RFS FA(DAT_C) RFS INCH
Tpos2d      0.0000                  0.0000      0.0156                   *++++
_____________________________________________________________________________
      CIRCLE CIRC1 CART CS7 INCH ANGDEC 10:20 May 10,2001
X          -8.7269     -8.7250     -0.0019      0.0000      0.0000     -0.0019
Y           1.6928      1.7000     -0.0072      0.0000      0.0000     -0.0072
Z           8.3899      8.3893      0.0006      0.0000      0.0000      0.0006
I           0.0000      0.0000      0.0000
J           0.0000      0.0000      0.0000
K           1.0000      1.0000      0.0000
Dia         0.4386      0.4380      0.0006      0.0100     -0.0100   ----|*+++
Cirlty                              0.0002      0.0004                  |++*+
_____________________________________________________________________________
        DIAM DIA_1 FEAT(CIRC2) INCH
Diam        0.4387      0.4380      0.0007      0.0100     -0.0100   ----|*+++
_____________________________________________________________________________
          2D POS_1 FA(CIRC2),MMC FA(DAT_A)RFS FA(DAT_B)RFS FA(DAT_C) RFS INCH
Tpos2d      0.0000                  0.0000      0.0157                   *++++
_____________________________________________________________________________
      CIRCLE CIRC2 CART CS7 INCH ANGDEC 10:20 May 10,2001
X          -8.7237     -8.7250      0.0013      0.0000      0.0000      0.0013
Y          -1.7046     -1.7000     -0.0046      0.0000      0.0000     -0.0046
Z           8.3899      8.3893      0.0006      0.0000      0.0000      0.0006
I           0.0000      0.0000      0.0000
J           0.0000      0.0000      0.0000
K           1.0000      1.0000      0.0000
Dia         0.4387      0.4380      0.0007      0.0100     -0.0100   ----|*+++
Cirlty                              0.0005      0.0004                   0.0001
_____________________________________________________________________________
        DIAM DIA_1 FEAT(CIRC3) INCH
Diam        0.4388      0.4380      0.0008      0.0100     -0.0100   ----|*+++
_____________________________________________________________________________
          2D POS_1 FA(CIRC3),MMC FA(DAT_A)RFS FA(DAT_B)RFS FA(DAT_C) RFS INCH
Tpos2d      0.0000                  0.0000      0.0158                   *++++
_____________________________________________________________________________
      CIRCLE CIRC3 CART CS7 INCH ANGDEC 10:20 May 10,2001
X           8.7241      8.7250     -0.0009      0.0000      0.0000     -0.0009
Y          -1.6952     -1.7000      0.0048      0.0000      0.0000      0.0048
Z           8.3899      8.3893      0.0006      0.0000      0.0000      0.0006
I           0.0000      0.0000      0.0000
J           0.0000      0.0000      0.0000
K           1.0000      1.0000      0.0000
Dia         0.4388      0.4380      0.0008      0.0100     -0.0100   ----|*+++
Cirlty                              0.0005      0.0004                   0.0001
_____________________________________________________________________________
        DIAM DIA_1 FEAT(CIRC4) INCH
Diam        0.4400      0.4380      0.0020      0.0100     -0.0100   ----|*+++
_____________________________________________________________________________
          2D POS_1 FA(CIRC4),MMC FA(DAT_A)RFS FA(DAT_B)RFS FA(DAT_C) RFS INCH
Tpos2d      0.0000                  0.0000      0.0170                   *++++
_____________________________________________________________________________
```

```
      CIRCLE CIRC4 CART CS7 INCH ANGDEC 10:20 May 10,2001
X           8.7236      8.7250     -0.0014      0.0000      0.0000     -0.0014
Y           1.7045      1.7000      0.0045      0.0000      0.0000      0.0045
Z           8.3898      8.3893      0.0005      0.0000      0.0000      0.0005
I           0.0000      0.0000      0.0000
J           0.0000      0.0000      0.0000
K           1.0000      1.0000      0.0000
Dia         0.4400      0.4380      0.0020      0.0100     -0.0100   ----|*+++
Cirlty                              0.0002      0.0004                  |++*+
_____________________________________________________________________________
      ****  SECOND RUN  ****


LEFT SIDE POINT
       POINT LFT_PNT CART CS7 INCH ANGDEC 10:26 May 10,2001
X          -8.7241     -8.7250      0.0009      0.0000      0.0000      0.0009
Y          -2.2024     -2.2000     -0.0024      0.0000      0.0000     -0.0024
Z           8.5008      8.5000      0.0008      0.0000      0.0000      0.0008
I          -0.0062      0.0000     -0.0062
J          -1.0000     -1.0000      0.0000
K          -0.0000      0.0000     -0.0000
_____________________________________________________________________________
RIGHT SIDE POINT
       POINT RGHT_PNT CART CS7 INCH ANGDEC 10:26 May 10,2001
X           8.7242      8.7250     -0.0008      0.0000      0.0000     -0.0008
Y          -2.1956     -2.2000      0.0044      0.0000      0.0000      0.0044
Z           8.5008      8.5000      0.0008      0.0000      0.0000      0.0008
I          -0.0003      0.0000     -0.0003
J          -1.0000     -1.0000      0.0000
K          -0.0000      0.0000     -0.0000
_____________________________________________________________________________

LEFT END POINT
       POINT LEFT_END CART CS7 INCH ANGDEC 10:27 May 10,2001
X          -9.1981     -9.2000      0.0019      0.0000      0.0000      0.0019
Y           0.0003     -0.0000      0.0003      0.0000      0.0000      0.0003
Z           8.3503      8.3500      0.0003      0.0000      0.0000      0.0003
I          -1.0000     -1.0000      0.0000
J          -0.0004      0.0000     -0.0004
K           0.0001     -0.0000      0.0001
_____________________________________________________________________________
RIGHT END POINT
       POINT RGHT_END CART CS7 INCH ANGDEC 10:27 May 10,2001
X           9.1987      9.2000     -0.0013      0.0000      0.0000     -0.0013
Y          -0.0007      0.0000     -0.0007      0.0000      0.0000     -0.0007
Z           8.3503      8.3500      0.0003      0.0000      0.0000      0.0003
I           1.0000      1.0000     -0.0000
J           0.0015     -0.0000      0.0015
K          -0.0001      0.0000     -0.0001
_____________________________________________________________________________

PARALLEL OF WINGS
      PARLEL PARA FA(WING_PLN) FA(DAT_A) INCH
Parlel      0.0045                  0.0045      0.0100                  |+*++
_____________________________________________________________________________

DISTANCE OF BORES TO WING PLANE
       DISTB DIST_Z1 FEAT(WING_PLN) FEAT(FRNT_CIRC) INCH
Distb       4.1406      4.1400      0.0006      0.0050     -0.0050   ----|*+++
_____________________________________________________________________________
       DISTB DIST_Z1 FEAT(WING_PLN) FEAT(BACK_CIRC) INCH
```

```
Distb       4.1402      4.1400      0.0002      0.0050     -0.0050   ----|*+++
_____________________________________________________________________________

WING HOLE LOCATIONS
        DIAM DIA_1 FEAT(CIRC1) INCH
Diam        0.4386      0.4380      0.0006      0.0100     -0.0100   ----|*+++
_____________________________________________________________________________
          2D POS_1 FA(CIRC1),MMC FA(DAT_A)RFS FA(DAT_B)RFS FA(DAT_C) RFS INCH
Tpos2d      0.0000                  0.0000      0.0156                   *++++
_____________________________________________________________________________
      CIRCLE CIRC1 CART CS7 INCH ANGDEC 10:30 May 10,2001
X          -8.7271     -8.7250     -0.0021      0.0000      0.0000     -0.0021
Y           1.6927      1.7000     -0.0073      0.0000      0.0000     -0.0073
Z           8.3897      8.3893      0.0004      0.0000      0.0000      0.0004
I           0.0000      0.0000      0.0000
J           0.0000      0.0000      0.0000
K           1.0000      1.0000      0.0000
Dia         0.4386      0.4380      0.0006      0.0100     -0.0100   ----|*+++
Cirlty                              0.0003      0.0004                   |++*+
_____________________________________________________________________________
        DIAM DIA_1 FEAT(CIRC2) INCH
Diam        0.4387      0.4380      0.0007      0.0100     -0.0100   ----|*+++
_____________________________________________________________________________
          2D POS_1 FA(CIRC2),MMC FA(DAT_A)RFS FA(DAT_B)RFS FA(DAT_C) RFS INCH
Tpos2d      0.0000                  0.0000      0.0157                   *++++
_____________________________________________________________________________
      CIRCLE CIRC2 CART CS7 INCH ANGDEC 10:30 May 10,2001
X          -8.7239     -8.7250      0.0011      0.0000      0.0000      0.0011
Y          -1.7047     -1.7000     -0.0047      0.0000      0.0000     -0.0047
Z           8.3897      8.3893      0.0004      0.0000      0.0000      0.0004
I           0.0000      0.0000      0.0000
J           0.0000      0.0000      0.0000
K           1.0000      1.0000      0.0000
Dia         0.4387      0.4380      0.0007      0.0100     -0.0100   ----|*+++
Cirlty                              0.0005      0.0004                    0.0001
_____________________________________________________________________________
        DIAM DIA_1 FEAT(CIRC3) INCH
Diam        0.4388      0.4380      0.0008      0.0100     -0.0100   ----|*+++
_____________________________________________________________________________
          2D POS_1 FA(CIRC3),MMC FA(DAT_A)RFS FA(DAT_B)RFS FA(DAT_C) RFS INCH
Tpos2d      0.0000                  0.0000      0.0158                   *++++
_____________________________________________________________________________
      CIRCLE CIRC3 CART CS7 INCH ANGDEC 10:30 May 10,2001
X           8.7240      8.7250     -0.0010      0.0000      0.0000     -0.0010
Y          -1.6953     -1.7000      0.0047      0.0000      0.0000      0.0047
Z           8.3897      8.3893      0.0004      0.0000      0.0000      0.0004
I           0.0000      0.0000      0.0000
J           0.0000      0.0000      0.0000
K           1.0000      1.0000      0.0000
Dia         0.4388      0.4380      0.0008      0.0100     -0.0100   ----|*+++
Cirlty                              0.0006      0.0004                    0.0002
_____________________________________________________________________________
        DIAM DIA_1 FEAT(CIRC4) INCH
Diam        0.4401      0.4380      0.0021      0.0100     -0.0100   ----|*+++
_____________________________________________________________________________
          2D POS_1 FA(CIRC4),MMC FA(DAT_A)RFS FA(DAT_B)RFS FA(DAT_C) RFS INCH
Tpos2d      0.0000                  0.0000      0.0171                   *++++
_____________________________________________________________________________
      CIRCLE CIRC4 CART CS7 INCH ANGDEC 10:30 May 10,2001
X           8.7234      8.7250     -0.0016      0.0000      0.0000     -0.0016
Y           1.7044      1.7000      0.0044      0.0000      0.0000      0.0044
```

```
Z           8.3897      8.3893      0.0004      0.0000      0.0000      0.0004
I           0.0000      0.0000      0.0000
J           0.0000      0.0000      0.0000
K           1.0000      1.0000      0.0000
Dia         0.4401      0.4380      0.0021      0.0100     -0.0100   ----|*+++
Cirlty                              0.0001      0.0004                  |+*++
```

```
      CIRCLE BACK_CIRC CART CS7 INCH ANGDEC 15:00 May 11,2001
X          -0.0003      0.0000     -0.0003      0.0000      0.0000     -0.0003
Y           2.8874      2.8875     -0.0001      0.0000      0.0000     -0.0001
Z           4.4247      4.4250     -0.0003      0.0000      0.0000     -0.0003
I          -0.0000     -0.0000      0.0000
J           1.0000      1.0000      0.0000
K           0.0000      0.0000      0.0000
Dia         1.7633      1.7600      0.0033      0.0050     -0.0050   ----|++*+
Cirlty                              0.0002      0.0004                  |+*++
```

```
      CIRCLE FRNT_CIRC CART CS7 INCH ANGDEC 15:00 May 11,2001
X           0.0003     -0.0000      0.0003      0.0000      0.0000      0.0003
Y          -2.8251     -2.8250     -0.0001      0.0000      0.0000     -0.0001
Z           4.4227      4.4250     -0.0023      0.0000      0.0000     -0.0023
I           0.0000      0.0000      0.0000
J          -1.0000     -1.0000      0.0000
K           0.0000      0.0000      0.0000
Dia         1.6267      1.6250      0.0017      0.0050     -0.0050   ----|+*++
Cirlty                              0.0002      0.0004                  |+*++
```

Appendix E

Miscellaneous Information and Purchases

11/10/00 OSHAT 2

O-RING SIZING FOR RECTANGULAR GROOVES:

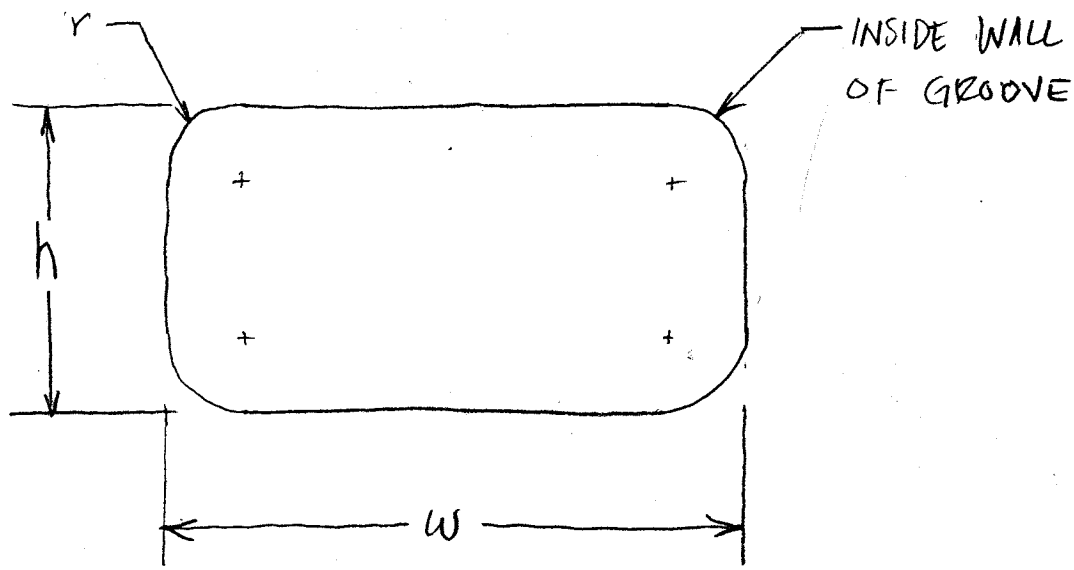

$$P = 2(h-2r) + 2(w-2r) + 2\pi r$$
$$= 2(h-2r+w-2r) + 2\pi r$$
$$= 2(h+w-4r) + 2\pi r$$
$$= 2\left[h+w-(4-\pi)r\right]$$

$$P = \pi D \qquad 2h+2w \quad -8r+2\pi r$$

D = O-RING ID

THE INSIDE PERIMETER OF THE O-RING GROOVE SHOULD BE NOMINALLY EQUAL TO THE ID OF THE O-RING, WITH A TOLERANCE OF 1 PERCENT OF THE O-RING ID (NOT LESS THAN 0.060", PG 4-14 PARKER HANDBOOK

$$\boxed{D = P = 2\left[h+w-(4-\pi)r\right]}$$

JOB ORDER ☐ PROCUREMENT ☐ MAKE/BUY NO. _____ PAGE 1 OF 20

JOB ORDER

ISSUED TO: PR.	C&M Shops ☐ Mech. Shops ☐	Elec. Shops ☐ Mech. Tech. ☐	Elec. Eng. ☐ Mech. Eng. ☐	Env. Hlth/Safety ☐ Inst. Sci./Eng. ☐	Date 1/4/01	Account No. 8212-GE	Serial No. VP 6998

Ordered By: Allan DeMello	Ext. 6637	Refer Questions To: Allan DeMello	Ext. 6637
Job Requested By: (Client) Allan DeMello		Ext. 6637	
Design Check By: (Engineer Responsible) [signature]		Ext. 6679	
Production Check By: JR Mehren	Date 01/04/01	Authorized By: R Young	Date 1/4/01
Job Description: Chopper Target Vacuum Chamber		Residual Risks Accepted By: [signature]	

SNS — FES MEBT

Chop

DELIVER TO:	NAME	Bldg.	Rm.	Ext.	DUE DATE
PARTS	A. DeMello	71	251	6637	2-28-00
ASSEMBLY					

REFERENCE DISTRIBUTION SEND COPIES TO:	Bldg.	Rm.	PRINTS J.O.	PRINTS DWGS.
Allan DeMello	71	251		
Daryl Oshatz	71	259		
John Mehren	46B		✓	*

WORK DISTRIBUTION

CRAFT	EST. HRS.	PRINTS J.O.	PRINTS DWGS.	CRAFT	EST. HRS.	PRINTS J.O.	PRINTS DWGS.
MECH. ENG.				MECH. SHOP OFF.			
MECH. TECH. OFF				ASS'Y SHOP			
SHOP 25				MACH. SHOP			
SHOP 71				PAINT SHOP			
SHOP				SHEET METAL			
SHOP				WELDING SHOP			
ELECT. ENG.				C&M OFFICE			
COORDINATING				CARPENTERS			
DRAFTING				ELECTRICIANS			
ELECT. FAB.				LABORERS			
ELECT. INSTALL				MAINT. TECHS			
ELECT. MAINT.				PAINTERS			
ELECT. Q.A.				PLUMBERS			
OPER. CHECK							
TECH. SUPP.				TOTAL HRS	AT	HR.	
ELEC-MECH. 80				LABOR $			
				MATERIAL $			
SAFETY SHOPS				TOTAL $ 15000			

SAFETY/ENVIRONMENTAL ANALYSIS BY: _____ DATE: _____ PRELIM. _____ FINAL _____

FABRICATION: ☐ LBL SHOPS ☒ OUTSIDE SHOPS

Attach completed MAKE/BUY form when Mech. Shops labor exceeds $1000

SPACE RESERVED FOR DEPARTMENTS RECEIVING COPIES

* 2 SETS FULL SIZE
3 SETS SIZE 3
1 SET SIZE 2

F.G. & H ENTERPRISES

P.O. # 6506603

JAN08'01 PM

ITEM NO.	SHOP USE	DRAWING OR PART NUMBER	QUANTITY	NAME – DESCRIPTION – INSTRUCTIONS
1		25B4074A	1	Vacuum Chamber Lower Assembly
2		25B4084A	2	Vacuum Chamber - View Port Flange Weldment
3		25B4104A	1	Vacuum Chamber - Target Actuator Flange Weldment
4		25B4134B	1	Water Manifold

RL-527 (Rev. 10/80)

C AND H ENTERPRISES
Precision Machining, Welding & Fabricating
801 Boggs Avenue • Fremont, CA 94539 • (510) 226-6083 • Fax (510) 226-6087
www.candhenterprises.com • candhent@earthlink.net

Quotation

Date 1-19-01

Quote No. DR011901

Name John Mehren

Company LBNL

Phone (510) 486-5524

Fax (510) 486-6668

Part Number	Quantity	Unit Price	Extended Price	Est. Delivery
25B4074	1	5,950.00	5,950.00	6 WEEKS ARO
25B4084	2	925.00	1,850.00	"
25B4104	1	1,850.00	1,850.00	"
25B4134	1	2,200.00	2,200.00	"
		Σ	$11850	

Comments: **Thanks for the opportunity to quote this for you. If you have any questions or concerns please feel free to call me.**

Thank You,

Dennis Romero
Project Coordinator

UNIVERSITY OF CALIFORNIA
ERNEST ORLANDO LAWRENCE
BERKELEY NATIONAL LABORATORY

FOR CONTRACT NO. DE-AC03-76SF00098
WITH THE DEPARTMENT OF ENERGY

SUBCONTRACTOR:
C and H Enterprises
801 Boggs Avenue
Fremont, CA 94539

SHIP TO:
Will Call,

MAIL INVOICE IN DUPLICATE TO UNIVERSITY OF CALIFORNIA:
UC Lawrence Berkeley Lab
Accounts Payable Dept
PO Box 528
Berkeley, CA 94701

Subcontract

Subcontract #	Page
6506603	1

This subcontract number MUST appear on all invoices, packing lists, cartons and correspondence related to this subcontract.

Subcontract Date	Buyer
23-JAN-01	R BALL
Revision Date	**Buyer**
	510-486-4513

Customer Account	Vendor No.	Payment Terms	Transportation Terms	F.O.B.	Ship Via
	112336	Net 30 Days	Acct. of Univ	Shipping Point	Pick-Up

Subcontractor Contact: Dennis Romero (510) 226-6083

Requester / Deliver to: DEMELLO, ALLAN J

FOR RESALE-State Sales Tax should not be charged, as the University holds State Sales Tax Permit SR CH 21-835970 for deliveries to Lawrence Berkeley National Laboratory.

LINE	PART NUMBER/DESCRIPTION	DELIVERY DATE	QUANTITY	UNIT	UNIT PRICE	EXTENSION	TAX
	CONFIRMED TO: ON 23-JAN-01 -- DO NOT DUPLICATE!						
1	Lower Assembly, Chopper Target Vacuum Chamber, per LBNL Dwg. 25B4074A.	06-MAR-01	1.00	EA	5,950.00	5,950.00	N
2	Weldment, Viewport Flange, Chopper Target Vacuum Chamber, per LBNL Dwg. 25B4084A.	06-MAR-01	2.00	EA	1,850.00	3,700.00	N
3	Weldment, Target Actuator Flange, Chopper Target Vacuum Chamber, per LBNL Dwg. 25B4104A.	06-MAR-01	1.00	EA	1,850.00	1,850.00	N
4	Manifold, Water, per LBNL Dwg. 25B4134B.	06-MAR-01	1.00	EA	2,200.00	2,200.00	N

QUALITY ASSURANCE/INSPECTION:

1. The above item/items shall conform to all requirements listed on the specifications/drawings. The Berkeley Lab reserves the right to inspect all of the items for conformance to the specifications/drawings and reject any items that do not meet the requirements.

TOTAL: Continued ...

The Terms and Conditions Attached Constitute A Part Of This Subcontract

-Requester's copy-

Authorized by J Mehren FOR R. BALL
University of California, Lawrence Berkeley National Laboratory

UNIVERSITY OF CALIFORNIA
ERNEST ORLANDO LAWRENCE
BERKELEY NATIONAL LABORATORY

FOR CONTRACT NO. DE-AC03-76SF00098
WITH THE DEPARTMENT OF ENERGY

SUBCONTRACTOR:
C and H Enterprises
801 Boggs Avenue
Fremont, CA 94539

SHIP TO:
Will Call,

MAIL INVOICE IN DUPLICATE TO UNIVERSITY OF CALIFORNIA:
UC Lawrence Berkeley Lab
Accounts Payable Dept
PO Box 528
Berkeley, CA 94701

Subcontract

Subcontract #	Page
6506603	2

This subcontract number MUST appear on all invoices, packing lists, cartons and correspondence related to this subcontract.

Subcontract Date	Buyer
23-JAN-01	R BALL
Revision Date	Buyer
	510-486-4513

Customer Account	Vendor No.	Payment Terms	Transportation Terms	F.O.B.	Ship Via
	112336	Net 30 Days	Acct. of Univ	Shipping Point	Pick-Up

Subcontractor Contact

Requester / Deliver to
DEMELLO, ALLAN J

FOR RESALE-State Sales Tax should not be charged, as the University holds State Sales Tax Permit SR CH 21-835970 for deliveries to Lawrence Berkeley National Laboratory.

LINE	PART NUMBER/DESCRIPTION	DELIVERY DATE	QUANTITY	UNIT	UNIT PRICE	EXTENSION	TAX
	2. The Berkeley Lab has the right either to reject or to require correction of nonconforming supplies. Supplies are nonconforming when they are defective in material or workmanship or are otherwise not in conformity with subcontract requirements. The Berkeley Lab may reject nonconforming supplies with or without disposition instruction.						
	3. The Berkeley Lab reserves the right to visit the subcontractor upon reasonable prior notice, to review the fabrication progress and inspect the manufacturing facility.						
	TERMS AND CONDITIONS:						
	The attached "General Provisions for Commercial Supplies & Services" are made a part of this subcontract and are equally binding.						

TOTAL: 13,700.00

The Terms and Conditions Attached Constitute A Part Of This Subcontract

-Requester's copy-

Authorized by _____
University of California, Lawrence Berkeley National Laboratory